FOREWORD

This manual (Volume 1) contains maintenance and repair procedures for the engine of the 1991 MR2.

Applicable models: SW20, 21 series

For repair procedures for the chassis and body, and for electrical service procedures, refer to VOLUME 2 (Pub. No. RM179U2).

The manual is divided into 12 sections and 2 appendixes with a thumb index for each section at the edge of the pages.

Please note that the publications below have also been prepared as relevant service manuals to the components and systems in this vehicle.

Manual Name	Pub. No.
• 1991 MR2 Electrical Wiring Diagram Manual	EWD083U
• 1991 MR2 New Car Features	NCF062U

All information in this manual is based on the latest product information at the time of publication. However, specifications and procedures are subject to change without notice.

TOYOTA MOTOR CORPORATION

1991 TOYOTA MR2 REPAIR MANUAL VOLUME 1

NOTE: The screen toned sections below are in VOLUME 2 (Pub.No.RM179U2).

INTRODUCTION IN
MAINTENANCE MA
ENGINE MECHANICAL EM
EXHAUST SYSTEM EX
TURBOCHARGER SYSTEM TC
EMISSION CONTROL SYSTEMS EC
EFI SYSTEM FI
COOLING SYSTEM CO
LUBRICATION SYSTEM LU
IGNITION SYSTEM IG
STARTING SYSTEM ST
CHARGING SYSTEM CH
CLUTCH CL
MANUAL TRANSAXLE MT
AUTOMATIC TRANSAXLE AT
SUSPENSION AND AXLE SA
BRAKE SYSTEM BR
STEERING SR
SRS AIRBAG AB
BODY ELECTRICAL SYSTEM BE
BODY BO
AIR CONDITIONING SYSTEM AC
SERVICE SPECIFICATIONS A
STANDARD BOLT TORQUE SPECIFICATIONS B
SST AND SSM C
ELECTRICAL WIRING DIAGRAMS D

INTRODUCTION

	Page
HOW TO USE THIS MANUAL	IN-2
IDENTIFICATION INFORMATION	IN-4
GENERAL REPAIR INSTRUCTIONS	IN-4
PRECAUTIONS FOR VEHICLES EQUIPPED WITH SRS AIRBAG	IN-7
PRECAUTIONS FOR VEHICLES EQUIPPED WITH A CATALYTIC CONVERTER	IN-11
PRECAUTIONS FOR VEHICLES WITH AN AUDIO SYSTEM WITH BUILT-IN ANTI-THEFT SYSTEM	IN-11
VEHICLE LIFT AND SUPPORT LOCATIONS	IN-12
ABBREVIATIONS USED IN THIS MANUAL	IN-13

HOW TO USE THIS MANUAL

To assist you in finding your way through the manual, the Section Title and major heading are given at the top of every page.

An **INDEX** is provided on the first page of each section to guide you to the item to be repaired.

At the beginning of each section, **PRECAUTIONS** are given that pertain to *all* repair operations contained in that section. *Read these precautions before starting any repair task.*

TROUBLESHOOTING tables are included for each system to help you diagnose the problem and find the cause. The repair for each possible cause is referenced in the remedy column to quickly lead you to the solution.

REPAIR PROCEDURES

Most repair operations begin with an overview illustration. It identifies the components and shows how the parts fit together.

Example:

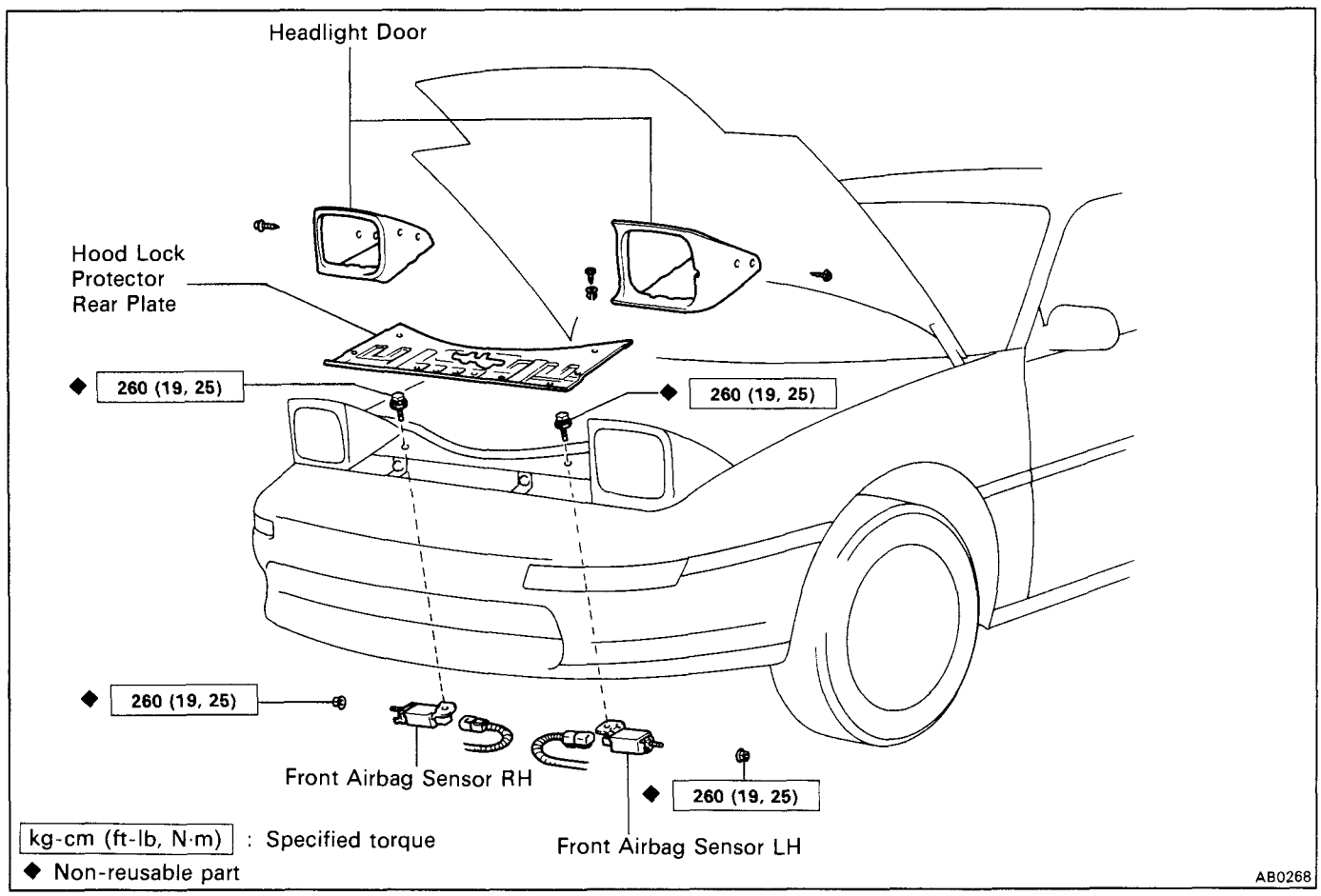

The procedures are presented in a step-by-step format:

- The illustration shows *what* to do and *where* to do it.
- The task heading tells *what* to do.
- The detailed text tells *how* to perform the task and gives other information such as specifications and warnings.

Example:

Illustration: what to do and where

Task heading: What to do

21. CHECK PISTON STROKE OF OVERDRIVE BRAKE

(a) Place SST and a dial indicator onto the overdrive brake piston as shown in the figure.

SST 09350-30020 (09350-06120)

Set part No. *Component part No.*

Detailed text: how to do task

(b) Measure the stroke applying and releasing the compressed air (4 – 8 kg/cm^2, 57 – 114 psi or 392 – 785 kPa) as shown in the figure.

Piston stroke: 1.40 – 1.70 mm (0.0551 – 0.0669 in.)

Specification

This format provides the experienced technician with a FAST TRACK to the information needed. The upper case task heading can be read at a glance when necessary, and the text below it provides detailed information. Important specifications and warnings always stand out in bold type.

REFERENCES

References have been kept to a minimum. However, when they are required you are given the page to refer to.

SPECIFICATIONS

Specifications are presented in bold type throughout the text where needed. You never have to leave the procedure to look up your specifications. They are also found in Appendix A, for quick reference.

CAUTIONS, NOTICES, HINTS:

- CAUTIONS are presented in bold type, and indicate there is a possibility of injury to you or other people.
- NOTICES are also presented in bold type, and indicate the possibility of damaged to the components being repaired.
- HINTS are separated from the text but do not appear in bold. They provide additional information to help you efficiently perform the repair.

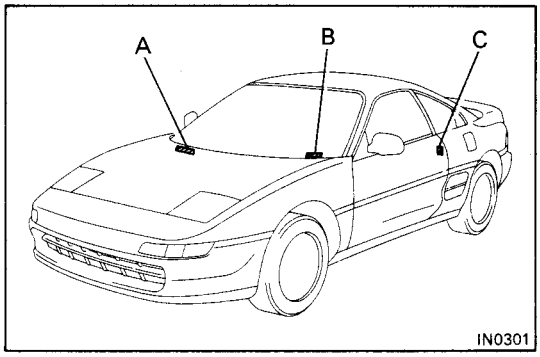

IDENTIFICATION INFORMATION

VEHICLE IDENTIFICATION NUMBER

The vehicle identification number is stamped on the cowl panel. This number has also been stamped on the vehicle identification number plate and certification regulation label.

A. Vehicle Identification Number
B. Vehicle Identification Number Plate
C. Certification Regulation Label

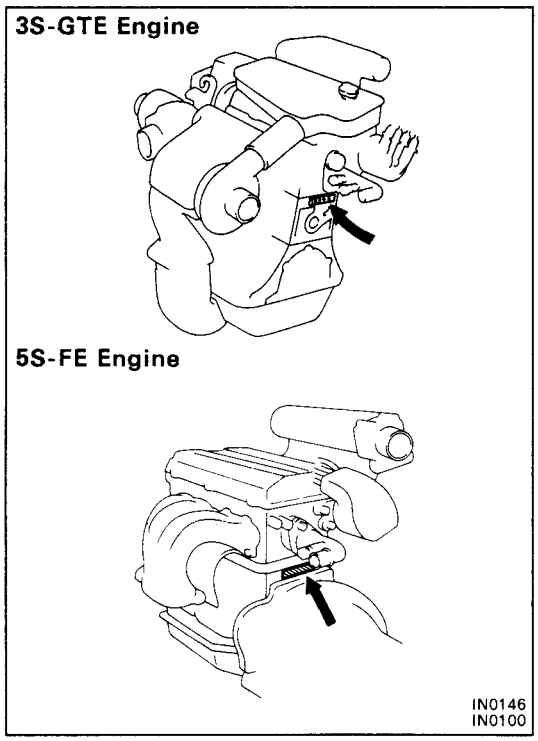

ENGINE SERIAL NUMBER

The engine serial number is stamped on the rear of the cylinder block.

GENERAL REPAIR INSTRUCTIONS

1. Use fender seat and floor covers to keep the vehicle clean and prevent damage.

2. During disassembly, keep parts in the appropriate order to facilitate reassembly.

3. Observe the following:

   (a) **CAUTION: Work must be started after approx. 20 seconds or longer from the time the ignition switch is turned to the "LOCK" position and the negative (–) terminal cable is disconnected from the battery (See page AB-2).**

   (b) Before performing electrical work, disconnect the negative cable from the battery terminal.

   (c) If it is necessary to disconnect the battery for inspection or repair, always disconnect the cable from the negative (–) terminal which is grounded to the vehicle body.

   (d) To prevent damage to the battery terminal post, loosen the terminal nut and raise the cable straight up without twisting or prying it.

   (e) Clean the battery terminal posts and cable terminals with a shop rag. Do not scrape them with a file or other abrasive object.

   (f) Install the cable terminal to the battery post with the nut loose, and tighten the nut after installation. Do not use a hammer to tap the terminal onto the post.

   (g) Be sure the cover for the positive (+) terminal is properly in place.

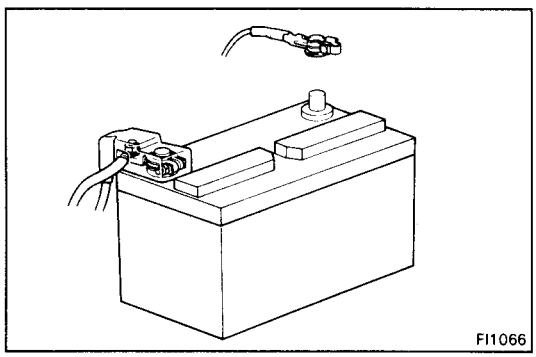

4. Check hose and wiring connectors to make sure that they are secure and correct.

5. Non-reusable parts
   (a) Always replace cotter pins, gaskets, O-rings and oil seals etc. with new ones.
   (b) Non-reusable parts are indicated in the component illustrations by the "◆" symbol.

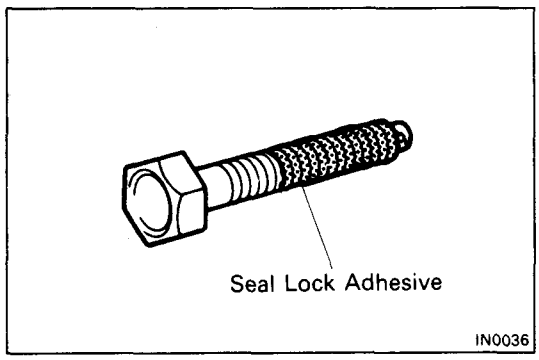

6. Precoated parts

   Precoated parts are bolts and nuts, etc. that are coated with a seal lock adhesive at the factory.
   (a) If a precoated part is retightened, loosened or caused to move in any way, it must be recoated with the specified adhesive.
   (b) Recoating of precoated parts
      (1) Clean off the old adhesive from the bolt, nut or threads.
      (2) Dry with compressed air.
      (3) Apply the specified seal lock adhesive to the bolt or nut threads.
   (c) Precoated parts are indicated in the component illustrations by the "★" symbol.

7. When necessary, use a sealer on gaskets to prevent leaks.

8. Carefully observe all specifications for bolt tightening torques. Always use a torque wrench.

9. Use of special service tools (SST) and special service materials (SSM) may be required, depending on the nature of the repair. Be sure to use SST and SSM where specified and follow the proper work procedure. A list of SST and SSM can be found at the back of this manual.

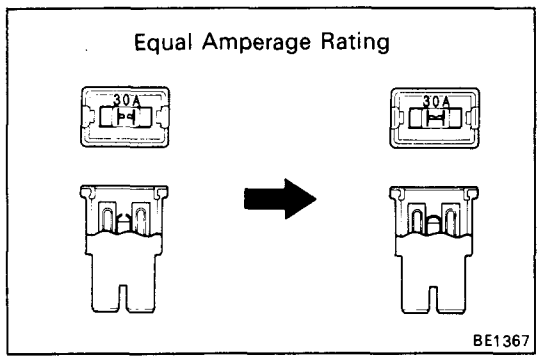

10. When replacing fuses, be sure the new fuse has the correct amperage rating. DO NOT exceed the rating or use one with a lower rating.

11. Care must be taken when jacking up an supporting the vehicle. Be sure to lift and support the vehicle at the proper locations (See page IN-12).
    (a) If the vehicle is to be jacked up only at the front or rear end, be sure to block the wheels at the opposite end in order to ensure safety.
    (b) After the vehicle is jacked up, be sure to support it on stands. It is extremely dangerous to do any work on a vehicle raised on a jack alone, even for a small job that can be finished quickly.

12. Observe the following precautions to avoid damage to the parts:
    (a) **Do not open the cover or case of the ECU unless absolutely necessary.**
    (If the IC terminals are touched, the IC may be destroyed by static electricity.)

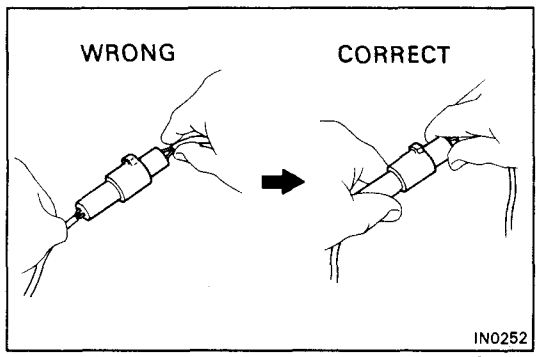

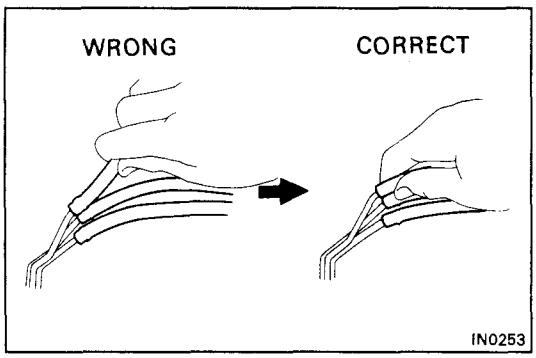

(b) To pull apart electrical connectors, pull on the connector itself, not the wires.
(c) Be careful not to drop electrical components,such as sensors or relays. If they are dropped on a hard floor they should be replaced and not reused.
(d) When checking continuity at the wire connector, insert the tester probe carefully to prevent terminals from bending.
(e) To disconnect vacuum hoses, pull on the end, not the middle of the hose.
(f) When steam cleaning an engine, protect the distributor, coil, air filter and VCV from water.
(g) Never use an impact wrench to remove or install temperature switches or temperature sensors.
(h) When using a vacuum gauge, never force the hose onto a connector that is too large. Use a step-down adapter instead. Once the hose has been stretched, it may leak.

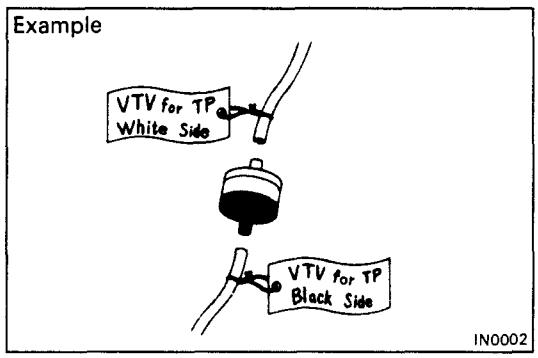

13. Tag hoses before disconnecting them:
    (a) When disconnecting vacuum hoses, use tags to identify how they should be reconnected.
    (b) After completing a job, double check that the vacuum hoses are properly connected. A label under the hood shows the proper layout.

PRECAUTIONS FOR VEHICLES EQUIPPED WITH SRS AIRBAG

The 1991 MR2 for USA specifications is equipped with an SRS (Supplemental Restraint System) airbag.
Failure to carry out service operations in the correct sequence could cause the airbag system to unexpectedly deploy during servicing, possibly leading to a serious accident.
Further, if a mistake is made in servicing the airbag system, it is possible the airbag may fail to operate when required.
Before performing servicing (including removal or installation of parts, inspection or replacement), be sure to read the following items carefully, then follow the correct procedure described in this manual.

Locations of Airbag Components

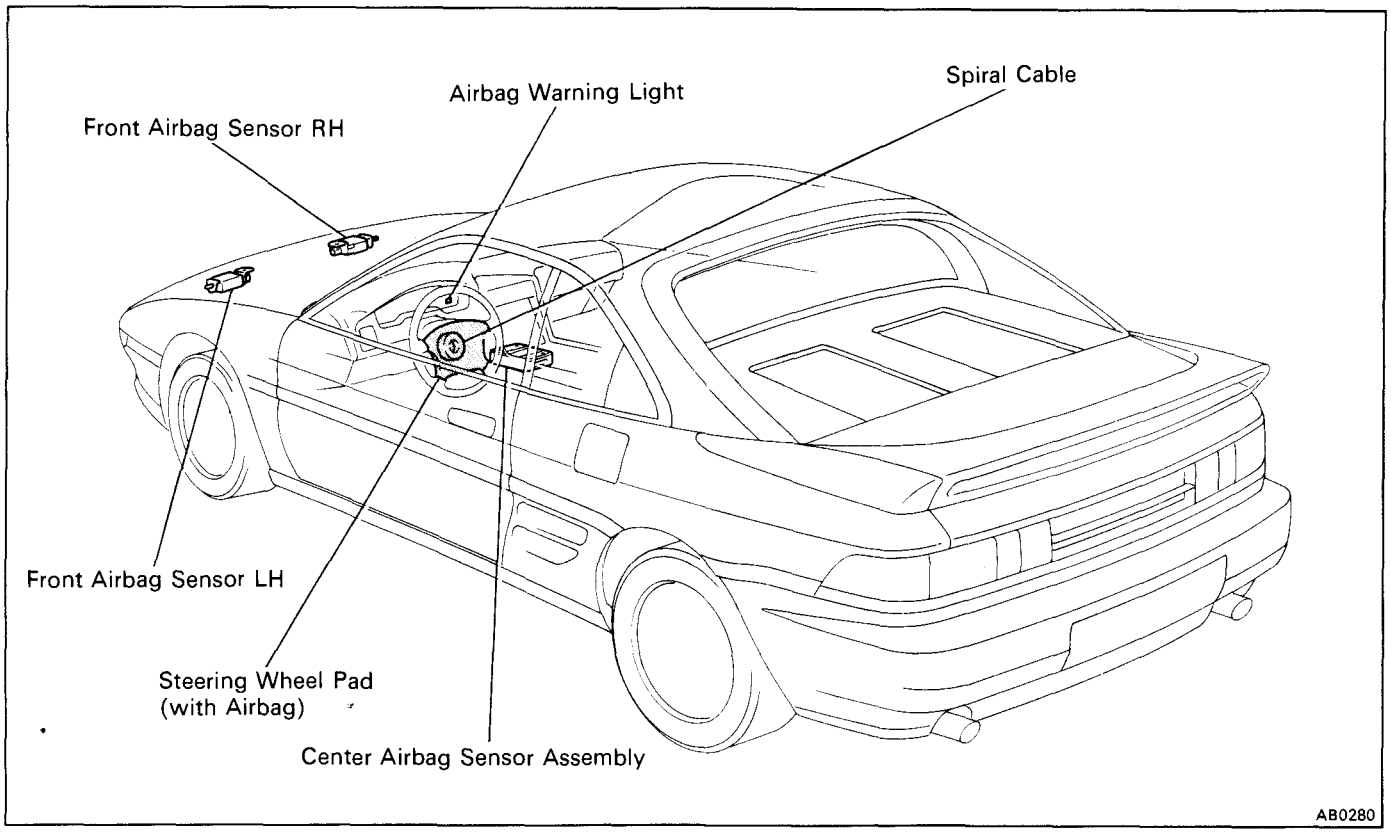

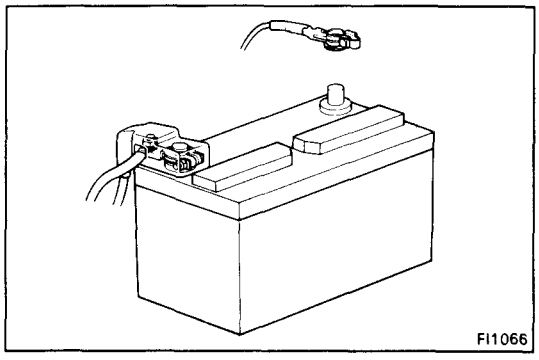

1. Malfunction symptoms of the airbag system are difficult to confirm, so the diagnostic codes become the most important source of information when troubleshooting. When troubleshooting the airbag system, always inspect the diagnostic codes before disconnecting the battery (See page AB-24).
2. **Work must be started after approx. 20 seconds or loner from the time the ignition switch is turned to the LOCK position and the negative (–) terminal cable is disconnected from the battery.**
   (The airbag system is equipped with a back-up power source so that if work is started within 20 seconds of disconnecting the negative (–) terminal cable of the battery, the airbag may be deployed.)

When the negative (–) terminal cable is disconnected from the battery, memory of the clock and audio systems will be cancelled. So before starting work, make a record of the contents memorized by the audio memory system. Then when work is finished, reset the audio system as before and adjust the clock. To avoid erasing the memory of each memory system, never use a back-up power supply from outside the vehicle.

3. Even in cases of a minor collision where the airbag does not deploy, the front airbag sensors and the steering wheel pad should be inspected (See page AB-11).
4. Never use airbag parts from another vehicle. When replacing parts, replace them with new parts.
5. Before repairs, remove the airbag sensors if shocks are likely to be applied to the sensors during repairs.
6. The center airbag sensor assembly contains mercury. After performing replacement, do not destroy the oil part. When scrapping the vehicle or replacing the center airbag sensor assembly itself, remove the center airbag sensor assembly and dispose of it as toxic waste.
7. Never disassemble and repair the front airbag sensors, center airbag sensor assembly or steering wheel pad in order to reuse it.
8. If the front airbag sensors, center airbag sensor assembly or steering wheel pad have been dropped, or if there are cracks, dents or other defects in the case, bracket or connector, replace them with new ones.
9. Do not expose the front airbag sensors, center airbag sensor assembly or steering wheel pad directly to hot air or flames.
10. Use a volt/ohmmeter with high impedance (10 kΩ/V minimum) for troubleshooting of the electrical circuit.
11. Information labels are attached to the periphery of the airbag components. Follow the instructions on the notices.
12. After work on the airbag system is completed, perform the airbag warning light check (See page AB-29).

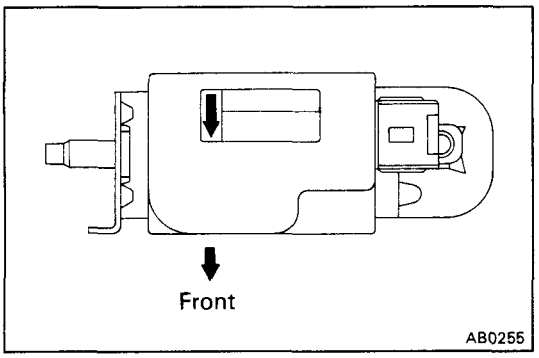

FRONT AIRBAG SENSOR

1. Never reuse the front airbag sensors involved in a collision when the airbag has deployed. (Replace both the left and right airbag sensors.)
2. Install the front airbag sensor with the arrow on the sensor facing toward the front of the vehicle.
3. The front airbag sensor set bolts and nuts have been anti-rust treated.
   When the sensor is removed, always replace the set bolts and nuts with new ones.
4. The front airbag sensor is equipped with an electrical connection check mechanism. Be sure to lock this mechanism securely when connecting the connector. If the connector is not securely locked, a malfunction code will be detected by the diagnosis system (See page AB-9).

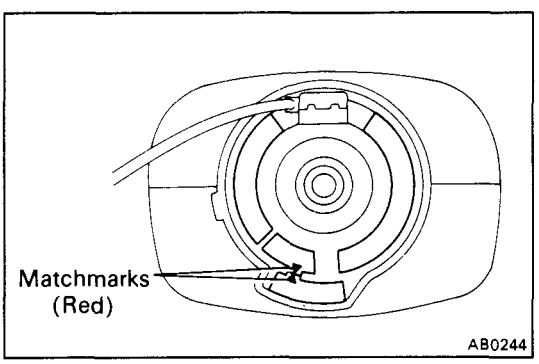

SPIRAL CABLE (IN COMBINATION SWITCH)

The steering wheel must be fitted correctly to the steering column with the spiral cable at the neutral position; otherwise cable disconnection and other troubles may result. Refer to page AB-16 of this manual concerning correct steering wheel installation.

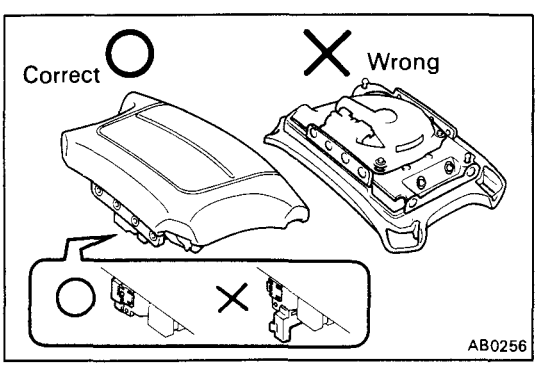

STEERING WHEEL PAD (WITH AIRBAG)

1. **When removing the steering wheel pad or handling a new steering wheel pad, it should be placed with the pad top surface facing up.**

   In this case, the twin-lock type connector lock lever should be in the locked state and care should be taken to place it so the connector will not be damaged. And do not store a steering wheel pad on top of another one. (Storing the pad with its metallic surface up may lead to a serious accident if the airbag inflates for some reason.)
2. **Never measure the resistance of the airbag squib. (This may cause the airbag to deploy, which is very dangerous.)**

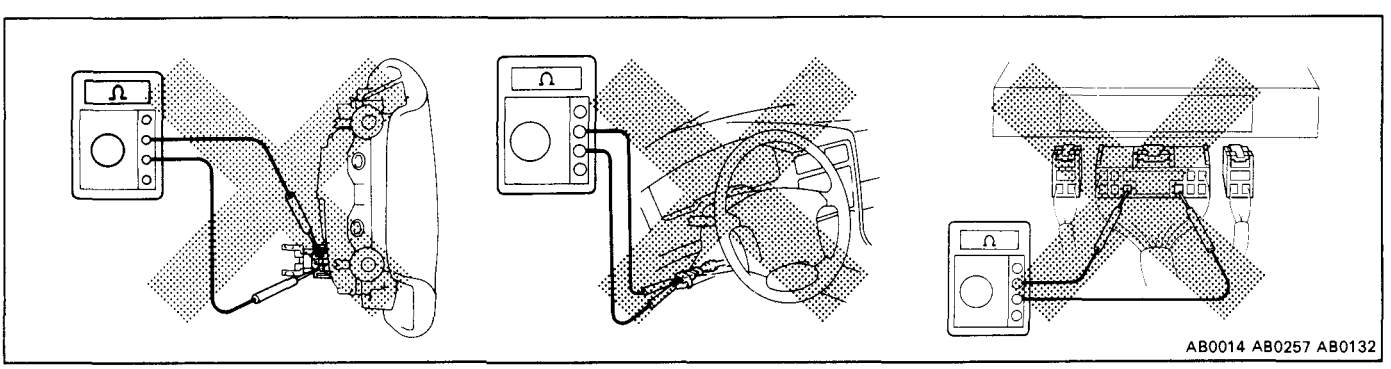

3. Grease should not be applied to the steering wheel pad and the pad should not be cleaned with detergents of any kind.
4. Store the steering wheel pad where the ambient temperature remains below 90°C (200°F), without high humidity and away from electrical noise.
5. When using electric welding, first disconnect the airbag connector (yellow color and 2 pins) under the steering column near the combination switch connector before starting work.
6. **When disposing of a vehicle or the steering wheel pad alone, the airbag should be deployed using an SST before disposal (See page AB-82). Perform the operation in a place away from electrical noise.**

CENTER AIRBAG SENSOR ASSEMBLY

The connectors to the center airbag sensor assembly should be connected or disconnected with the sensor mounted on the floor. If the connectors are connected or disconnected while the center airbag sensor assembly is not mounted to the floor, it could cause undersired ignition of the airbag system.

WIRE HARNESS AND CONNECTOR

The airbag system's wire harness is integrated with the cowl wire harness assembly. The wires for the airbag wire harness are encased in a yellow corrugated tube. All the connectors for the system are also a standard yellow color. If the airbag system wire harness becomes disconnected or the connector becomes broken due to an accident, etc., repair or replace it as shown on page AB-21.

PRECAUTIONS FOR VEHICLES EQUIPPED WITH A CATALYTIC CONVERTER

CAUTION: If large amounts of unburned gasoline flow into the converter, it may overheat and create a fire hazard. To prevent this, observe the following precautions and explain them to your customer.

1. **Use only unleaded gasoline.**
2. **Avoid prolonged idling.**

   Avoid running the engine at idle speed for more than 20 minutes.
3. **Avoid spark jump test.**

   (a) Spark jump test only when absolutely necessary. Perform this test as rapidly as possible.

   (b) While testing, never race the engine.
4. **Avoid prolonged engine compression measurement.**

   Engine compression tests must be made as rapidly as possible.
5. **Do not run engine when fuel tank is nearly empty.**

   This may cause the engine to misfire and create an extra load on the converter.
6. **Avoid coasting with ignition turned off and prolonged braking.**
7. **Do not dispose of used catalyst along with parts contaminated with gasoline or oil.**

PRECAUTIONS FOR VEHICLES WITH AN AUDIO SYSTEM WITH BUILT-IN ANTI-THEFT SYSTEM

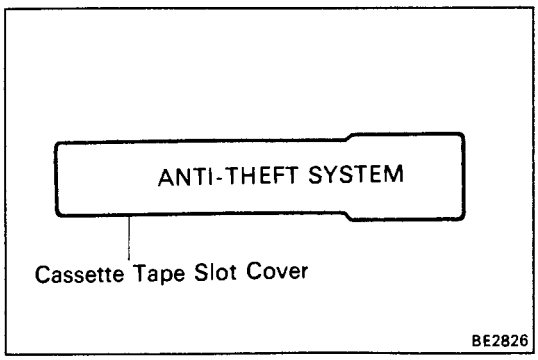

Audio Systems displaying the sign "ANTI-THEFT SYSTEM" shown on the left has a built-in anti-theft system which makes the audio system soundless if stolen.
If the power source for the audio system is cut even once, the anti-theft system operates so that even if the power source is reconnected, the audio system will not produce any sound unless the ID number selected by the customer is input again.
Accordingly, when performing repairs on vehicles equipped with this system, before disconnecting the battery terminals or removing the audio system the customer should be asked for the ID number so that the technician can input the ID number afterwards, or else a request made to the customer to input the ID number.
For the method to input the ID number or cancel the anti-theft system, refer to the Owner's Manual.

VEHICLE LIFT AND SUPPORT LOCATIONS

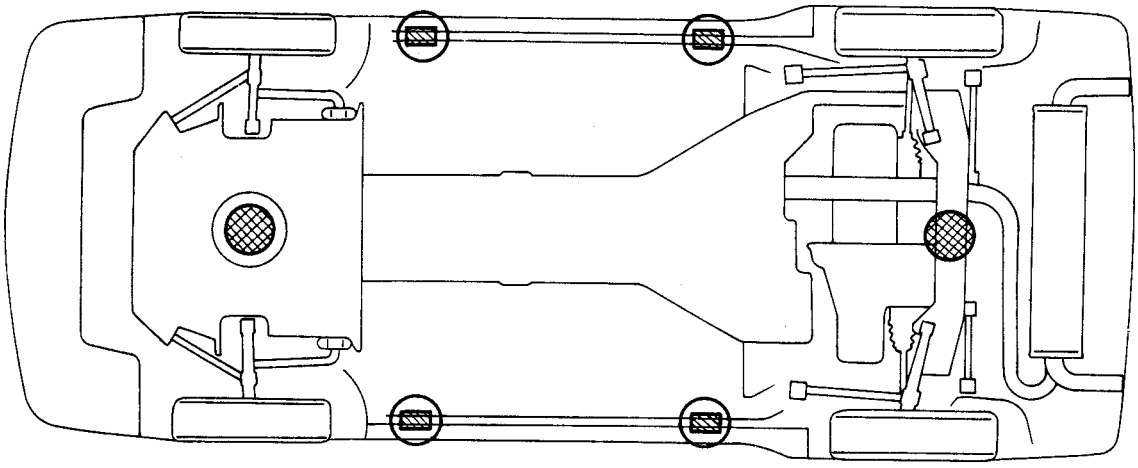

Front

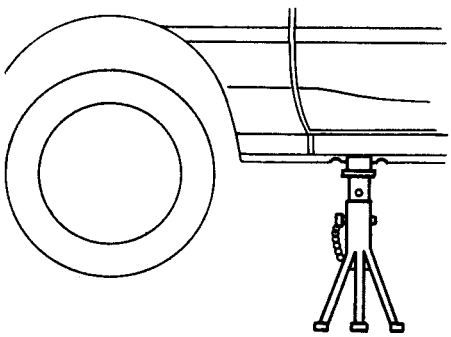

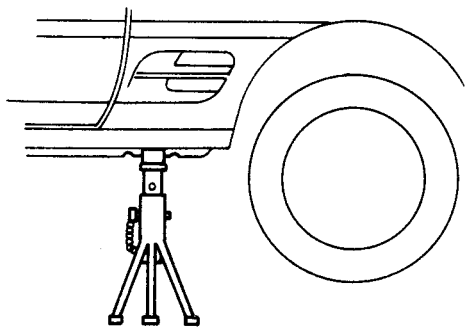

JACK POSITION

Front .... Jack up support of front under cover center
Rear ..... Rear suspension crossmember

PANTOGRAPH JACK POSITION

SUPPORT POSITION

Safety stand .....

IN0299
IN0300

ABBREVIATIONS USED IN THIS MANUAL

ABS	Anti-Lock Brake System
A/C	Air Conditioner
Approx.	Approximately
A/T	Automatic Transaxle
ATF	Automatic Transmission Fluid
B_1	Second Coast Brake
B_2	Second Brake
B_3	First and Reverse Brake
B_4	Underdrive Brake
BTDC	Before Top Dead Center
BVSV	Bimetal Vacuum Switching Valve
C_1	Forward Clutch
C_2	Direct Clutch
C_3	Underdrive Clutch
CALIF.	Vehicles Sold in California
CB	Circuit Breaker
CD	Compact Disc
DP	Dash Pot
ECT	Electronic Controlled Transaxle
ECU	Electronic Control Unit
EFI	Electronic Fuel Injection
EGR	Exhaust Gas Recirculation
ELR	Emergency Locking Retractor
ESA	Electronic Spark Advance
EVAP	Evaporative (Emission Control)
EX	Exhaust (manifold, valve)
Ex.	Except
F_1	No.1 One-Way Clutch
F_2	No.2 One-Way Clutch
F_3	Underdrive One-Way Clutch
FIPG	Formed in Place Gasket
FL	Fusible Link
FR, Fr	Front
IN	Intake (manifold, valve)
IG	Ignition
ISC	Idle Speed Control
J/B	Junction Block
LED	Light Emitting Diode
LH	Left-Hand
Max.	Maximum
MP	Multipurpose
M/T	Manual Transaxle
OD, O/D	Overdrive
O/S	Oversize
P & BV	Proportioning and Bypass Valve
PCV	Positive Crankcase Ventilation
PS	Power Steering
RH	Right-Hand
Rr	Rear
SRS	Supplemental Restraint System
SSM	Special Service Materials
SST	Special Service Tools
STD	Standard
SW	Switch
TDC	Top Dead Center
T-VIS	Toyota-Variable Induction System
TWC	Three-Way Catalyst
U/D	Underdrive
U/S	Undersize
VSV	Vacuum Switching Valve
w/	With
w/o	Without

MAINTENANCE

	Page
MAINTENANCE SCHEDULE	MA-2
MAINTENANCE OPERATIONS	MA-4
GENERAL MAINTENANCE	MA-14

GENERAL NOTES:

- The maintenance schedule for the vehicle consists of separate A and B schedules which are applicable depending on the conditions the vehicle is used in. Confirm the vehicle's usage conditions, select the appropriate schedule and service the vehicle accordingly.
- Every service item in the periodic maintenance list must be performed.
- Next to the columns of periods in the schedule, reference pages have been added for easy access to service data and procedures necessary for each position.
- Periodic maintenance service must be performed according to whichever interval in the periodic maintenance list occurs first, the odometer reading (miles) or the times interval (months).
- Maintenance services after the last period should be performed at the same interval as before unless otherwise noted.
- Failure to do even one item can cause the engine to run poorly and increase exhaust emissions.

MAINTENANCE SCHEDULE

SCHEDULE A

Maintenance operation: A = Check and adjust if necessary;
R = Replace, change or lubricate;
I = Inspect and correct or replace if necessary

CONDITIONS:

- Towing a trailer, using a camper or car top carrier.
- Repeated short trips les than 5 miles (8 km) and outside temperatures remain below freezing.
- Extensive idling and /or speed driving for long distance such as police, taxi or door-to-door delivery use.
- Operating on dusty, rough, muddy or salt spread roads.

System	Service interval (Odometer reading or months, whichever comes first) / Maintenance items		Maintenance services beyond 60,000 miles (96,000 km) should continue to be performed at intervals shown for each maintenance schedule.																	See page (item No.)
		Miles x 1,000	3.75	7.5	11.25	15	18.75	22.5	26.25	30	33.75	37.5	41.25	45	48.75	52.5	56.25	60	Months	
		km x 1,000	6	12	18	24	30	36	42	48	54	60	66	72	78	84	90	96		
ENGINE	Timing belt (1)																	R	–	MA-4 (item 1)
	Valve clearance																	A	A: Every 72 months	MA-7 (item 12)
	Drive belt		I: First period, 60,000 miles (96,000 km) or 72 months. I: After that every 7,500 miles (12,000 km) or 12 months.																	MA-4 (item 2)
	Engine oil★	3S-GTE engine	R. Every 2,500 miles (4,500 km) or 3 months																	MA-6 (item 6)
		5S-FE engine	R	R	R	R	R	R	R	R	R	R	R	R	R	R	R	R	R: Every 6 months	MA-6 (item 6)
	Engine oilfilter★	3S-GTE engine	R. Every 5,000 miles (8,000 km) or 6 months																	MA-6 (item 6)
		5S-FE engine	R	R	R	R	R	R	R	R	R	R	R	R	R	R	R	R	R: Every 6 months	MA-6 (item 6)
	Engine coolant		R: First period, 45,000 miles (72,000 km) or 36 months. R: After that every 30,000 miles (48,000 km) or 24 months																	MA-6 (item 6)
	Exhaust pipes and mountings					I				I				I				I	I: Every 24 months	MA-7 (item 11)
FUEL	Air Filter(2)★*	3S-GTE engine	I: Every 5,000 miles (8,000 km) or 6 months R: Every 30,000 miles (48,000 km) or 36 months																	MA-4 (item 3, 4)
		5S-FE engine	I	I	I	I	I	I	I	R	I	I	I	I	I	I	I	R	I: Every 24 months R: Every 36 months	MA-4 (item 3, 4)
	Fuel lines and connections (3)									I								I	I: Every 36 months	MA-7 (item 10)
	Fuel tank cap gasket																	R	R: Every 72 months	MA-7 (item 9)
IGNITION	Spark plug	3S-GTE engine																R	R: Every 72 months	MA-5 (item 5)
		5S-FE engine★*								R								R	R: Every 36 months	MA-5 (item 5)
EVAP	Charcoal canister																	I	I: Every 72 months	MA-7 (item 8)
BRAKES	Brake pads and discs (Front and rear)			I		I		I		I		I		I		I		I	I: Ever 12 months	MA-8 (item 14)
	Brake line pipes and hoses					I				I				I				I	I: Ever 24 months	MA-8 (item 13)
CHASSIS	Steering linkage			I		I		I		I		I		I		I		I	I: Ever 12 months	MA-9 (item 15)
	SRS airbag		I: First period, 10 years. I: After every 2 years.																	MA-9 (item 16)
	Drive shaft boots			I		I		I		I		I		I		I		I	I: Ever 12 months	MA-10 (item 18)
	Manual transaxle, automatic transaxle and differential					R				R				R				R	R: Ever 24 months	MA-10 (item 20, 21)
	Steering gear housing oil (6)					I				I				I				I	I: Ever 24 months	MA-9 (item 15)
	Bolts and nuts on chassis and body (7)			I		I		I		I		I		I		I		I	I: Ever 12 months	MA-12 (item 22)

★ and * mark indicates maintenance which is part of the warranty conditions for the engine control system. the warranty period is in accordance with the owner's guide or the warranty booklet. (★: California specification vehicles *: Other specification vehicles)

(1) Applicable to vehicles operated under conditions extensive idling and /or low speed driving for long distances such as police, taxi or door-to-door delivery use.
(2) Applicable when operating mainly on dusty road. If not, apply SCHEDULE B.
(3) Includes inspection of fuel tank bank and vapor vent system.
(4) Check for leakage.
(5) Check for oil leaks from steering gear housing.
(6) Applicable only when operating mainly on rough, muddy rods. The applicable parts are listed below. For other usage conditions, refer to SCHEDULE B.
- Front and rear suspention member to cross body
- Strut bar bracket to body bolts
- Bolts for sheet installation

SCHEDULE B

CONDITIONS: Conditions other than those listed for SCHEDULE A.

System	Service interval (Odometer reading or months. Whichever comes first) / Maintenance items		Maintenance service beyond 60,000 miles (96,000 km) should continue to be performed at the same intervals shown for each maintenance schedule.									See page (item No.)
		Miles x 1,000	7.5	15	22.5	30	37.5	45	52.5	60	Months	
		km x 1,000	12	24	36	48	60	72	84	96		
ENGINE	Valve clearance									A	A: Every 72 months	MA-7 (item 12)
	Drive belt		I: First period, 60,000 miles (96,000 kn) or 72 months. I: After that every 7,500 miles (12,000 km) or 12 months.									MA-4 (item 2)
	Engine oil★	3D-GTE engine	R: Every 5,000 miles 8,000 km) or 6 months.									MA-6 (item 6)
		5S-FE engine	R	R	R	R	R	R	R	R	R: Every 12 months	MA-6 (item 6)
	Engine oilfilter★	3S-GTE engine	R: Every 10,000 miles (16,000 km) or 12 months.									MA-6 (item 6)
		5S-FE engine	R	R	R	R	R	R	R	R	R: Every 12 months	MA-6 (item 6)
	Engine coolant		R: First period, 45,000 miles (72,000 km) or 36 months. R: After that every 30,000 miles (48,000 km) or 24 months.									MA-6 (item 7)
	Exhaust pipes and mountings					I				I	I: Every 36 months	MA-7 (item 11)
FUEL	Air filter★*					R				R	R: Every 36 months	MA-4 (item 3, 4)
	Fuel lines and connections(1)					I				I	I: Every 36 months	MA-7 (item 10)
	Fuel tank cap gasket									R	R: Every 72 months	MA-7 (item 9)
IGNITION	Speak plugs	3S-GTE engine								R	R: Every 72 months	MA-5 (item 5)
		5S-FE engine**				R				R	R: Every 36 months	MA-5 (item 5)
EVAP	Charcoal canister									I	I: Every 72 months	MA-7 (item 8)
BRAKES	Brake pads and discs (Front and rear)			I		I		I		I	I: Every 24 months	MA-8 (item 14)
	Brake line pipes and hoses			I		I		I		I	I: Every 24 months	MA-8 (item 13)
CHASSIS	Steering linkage			I		I		I		I	I: Every 24 months	MA-9 (item 15)
	SRS airbag		I: First period, 10 years. I: After that every 2 years.									MA-9 (item 16)
	Drive shaft boots			I		I		I		I	I: Every 24 months	MA-10 (item 18)
	Ball joints and dust covers			I		I		I		I	I: Every 24 months	MA-10 (item 19)
	Manual transaxle, automatic transaxle and differential (2)			I		I		I		I	I: Every 24 months	MA-10 (item 20, 21)
	Steering gear housing oil(3)			I		I		I		I	I: Every 24 months	MA-9 (item 15)
	Bolts and nuts on chassis and body(4)			I		I		I		I	I: Every 24 months	MA-12 (item 22)

★and* mark indicates maintenance which is part of the warranty conditions for the engine control system. The warranty period is in accordance with the owner's guide or the warranty booklet.
(★: California specification vehicle *: Other specification vehicles)

(1) Includes inspection of fuel tank band and vapor vent system.

(2) Check for leakage.

(3) Check for oil leaks from steering gear housing.

(4) The Applicable part are listed below.
- Front and rear suspension member to cross body
- Strut bar bracket to body body bolt
- Bolts for sheet installation

MAINTENANCE OPERATIONS

ENGINE

Cold Engine Operations

1. REPLACE TIMING BELT

(a) Remove the timing belt.
3S-GTE (See pages EM-26 to 31)
5S-FE (See pages EM-47 to 52)

(b) Install the timing belt.
3S-GTE (See pages EM-35 to 41)
5S-FE (See pages EM-55 to 60)

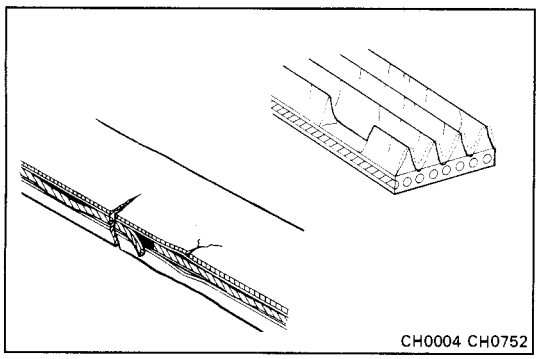

2. INSPECT DRIVE BELT

(a) Visually check the drive belt for excessive wear, frayed cords etc.

If necessary, replace the drive belt.

HINT: Cracks on the ribbed side of a drive belt are considered acceptable. If the drive belt has chunks missing from the ribs, it should be replaced.

(b) Using a belt tension gauge, measure the drive belt tension.

Belt tension gauge:
Nippondenso BTG-20 (95506-00020)
Borroughs No.BT-33-73F

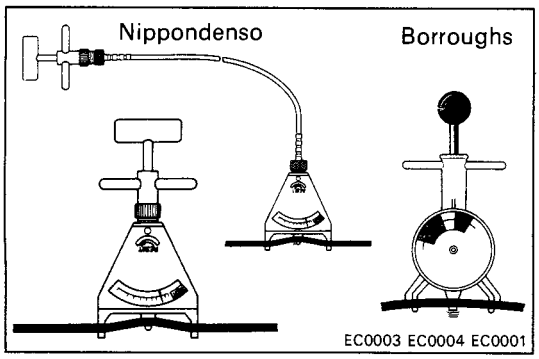

Drive belt tension:

Alternator	**New belt**	**120 ± 20 lb**
	Used belt	**104 ± 20 lb**
A/C compressor	**New belt**	**160 ± 25 lb**
	Used belt	**100 ± 20 lb**

If necessary, adjust the drive belt tension.

HINT:
- "New belt" refers to a belt which has been used 5 minutes or less on a running engine.
- "Used belt" refers to a belt which has been used on a running engine for 5 minutes or more.
- After installing the belt, check that it fits properly in the ribbed grooves.
- Check by hand to confirm that the belt has not slipped out of the groove on the bottom of the pulley.
- After installing a new belt, run the engine for about 5 minutes and recheck the belt tension.

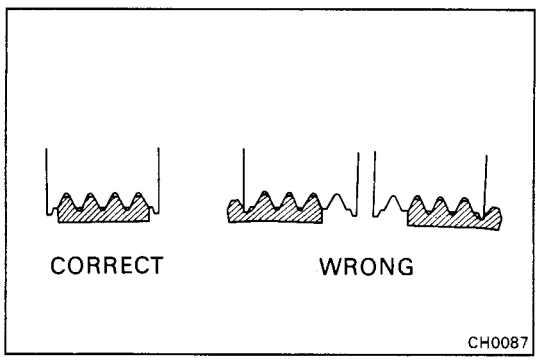

3. INSPECT AIR FILTER

(a) Visually check that the air cleaner element is not excessively, damaged or oily.

If necessary, replace the air cleaner element.

(b) Clean the element with compressed air.
First blow from the inside thoroughly, then blow off the outside of the element.

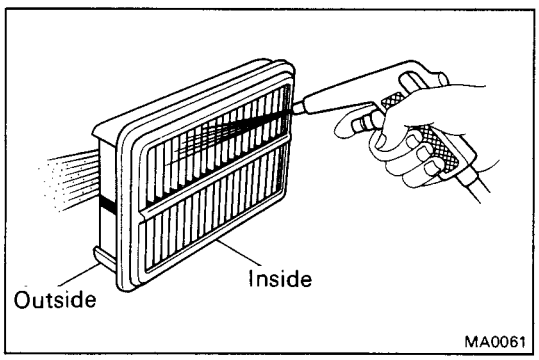

4. REPLACE AIR FILTER

Replace the air cleaner element with a new one.

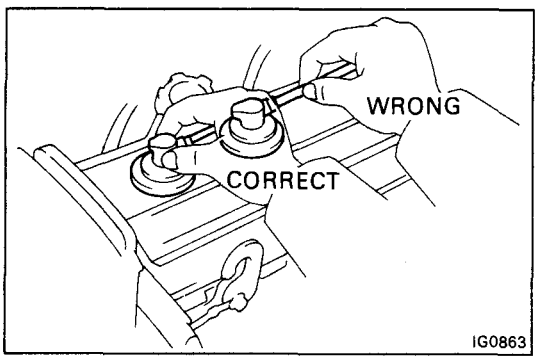

5. REPLACE SPARK PLUGS

(a) Disconnect the spark plug cords at the rubber boot. DO NOT pull on the cords.

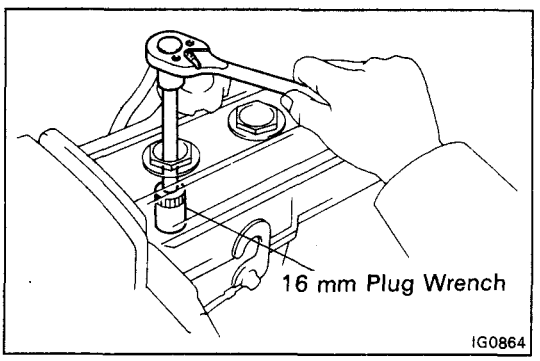

(b) Using a 16 mm plug wrench, remove the spark plugs.

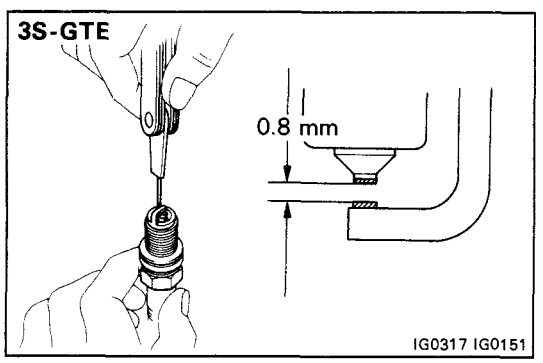

(c) (3S-GTE)
Check the electrode gap of new spark plugs.

Correct electrode gap: **0.8 mm (0.031 in.)**

Recommended spark plugs: **ND PK20R8**
NGK BKR6EP8

HINT: If adjusting the gap of a new spark plug, bend only the base of the ground electrode. DO NOT touch the tip.

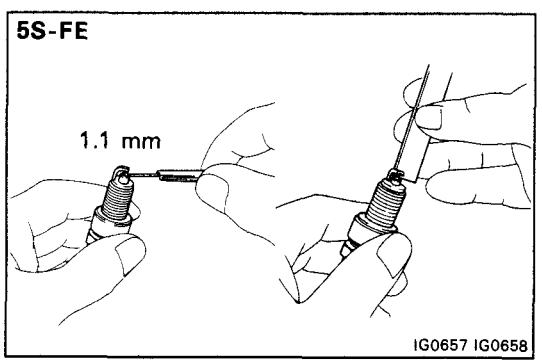

(d) (5S-FE)
Adjust the electrode gap of new spark plugs.

Correct electrode gap: **1.1 mm (0.043 in.)**

Recommended spark plugs: **ND K16R-U11**
NGK BKR5EYA11

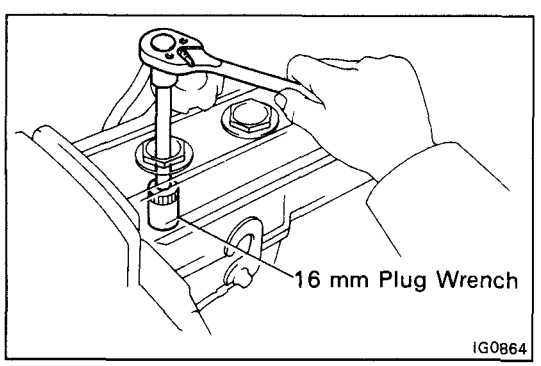

(e) Using a 16 mm plug wrench, install the spark plugs.

Torque: 180 kg-cm (13 ft-lb, 18 N·m)

(f) Connect the spark plug cords.

Recommended Viscosity (SAE):

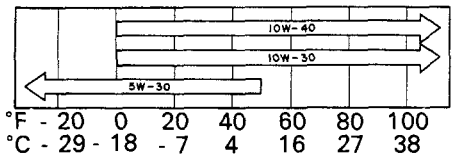

TEMPERATURE RANGE ANTICIPATED BEFORE NEXT OIL CHANGE

LU0884

6. **REPLACE ENGINE OIL AND OIL FILTER**
(See page LU-7)

Oil grade: API grade SG, multigrade viscosity and fuel-efficient oil

Drain and refill capacity (3S-GTE):
w/ Oil filter change
3.9 liters (4.1 US qts, 3.4 Imp. qts)
w/o Oil filter change
3.6 liters (3.8 US qts, 3.2 Imp. qts)

Drain and refill capacity (5S-FE):
w/ Oil filter change
4.2 liters (4.4 US qts, 3.7 Imp. qts)
w/o Oil filter change
3.8 liters (4.0 US qts, 3.3 Imp. qts)

7. **REPLACE ENGINE COOLANT**
(See page CO-5)

HINT:
- Used a good brand of ethylene-glycol base coolant, mixed according to the manufacturer's instructions.
- Using coolant which has more than 50 % ethylene-glycol (but not more 70 %) is recommended.

NOTICE:
- **Do not use as alcohol type coolant.**
- **The coolant should be mixed with demineralized water or distilled water.**

Coolant capacity (w/ Heater):
3S-GTE 13.6 liters (14.4 US qts, 12.0 Imp. qts)
5S-FE 13.0 liters (13.7 US qts, 11.4 Imp. qts)

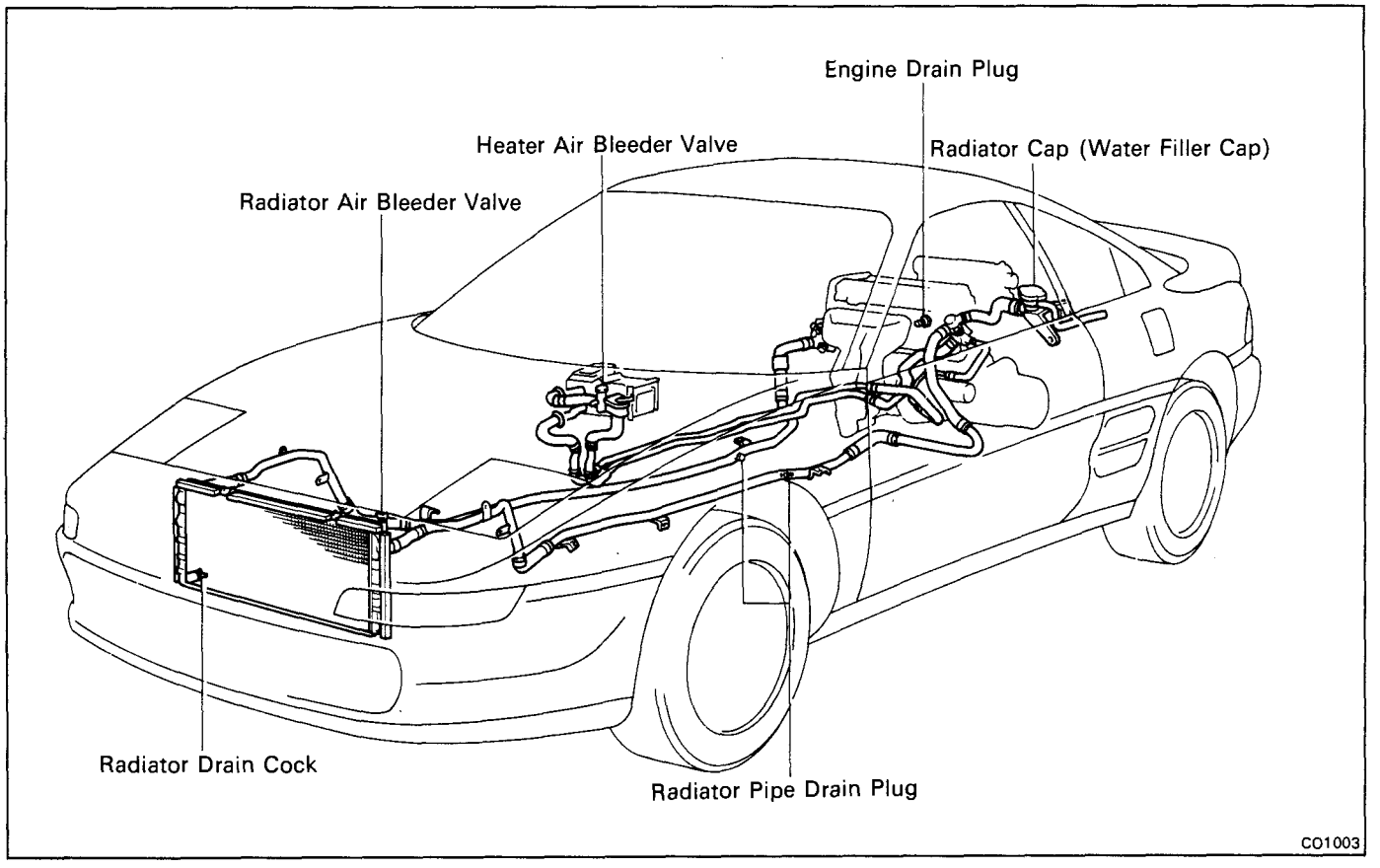

CO1003

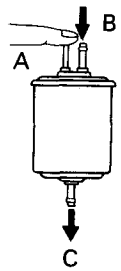

Air should flow through freely and no Charcoal should come out. EC1121

8. INSPECT CHARCOAL CANISTER

(a) Disconnect the hoses from the charcoal canister. Label hoses for correct installation.

(b) Plug port A with your finger, and blow compressed air (3 kg/cm, 43 psi or 294 kPa) through port B (fuel tank side).

- Check that air comes out of the bottom port C without resistance.
- Check that no activated charcoal comes out.

If necessary, replace the charcoal canister.

NOTICE: Do not attempt to wash the charcoal.

(c) Reconnect the hoses to the charcoal canister.

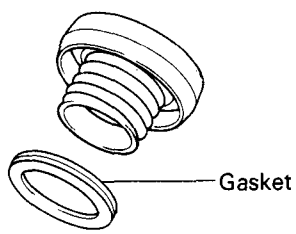

MA0379

9. REPLACE GASKET IN FUEL TANK CAP

(a) Remove the old gasket from the tank cap.

NOTICE: Do not damage the tank cap.

(b) Install a new gasket by hand.

(c) Check the cap for damage or cracks.

(d) Install the cap and check the torque limiter.

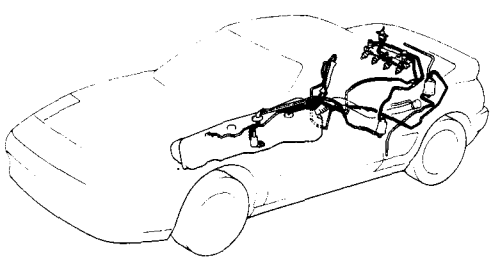

MA0649

10. INSPECT FUEL LINES AND CONNECTIONS

Visually check the fuel lines for cracks, leakage, loose connections, deformation or tank band looseness.

11. INSPECT EXHAUST PIPES AND MOUNTINGS

Visually check the pipes, hangers and connections for severe corrosion, leaks or damage.

12. ADJUST VALVE CLEARANCE

3S-GTE (See page EM-11)
5S-FE (See page EM-16)

Valve clearance (Cold):

3S-GTE	Intake	0.15 – 0.25 mm (0.006 – 0.010 in.)
	Exhaust	0.20 – 0.30 mm (0.008 – 0.012 in.)
5S-FE	Intake	0.19 – 0.29 mm (0.007 – 0.011 in.)
	Exhaust	0.28 – 0.38 mm (0.011 – 0.015 in.)

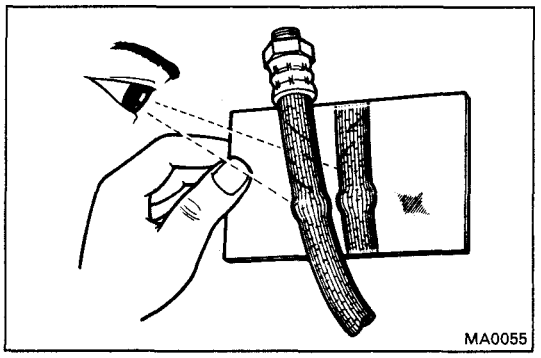

BRAKES

13. INSPECT BRAKE LINE PIPES AND HOSES

HINT: Check in a well lighted area. Check the entire circumference and length of the brake hoses using a mirror as required. Turn the front wheels fully right or left before checking the front brake.

(a) Check all brake lines and hoses for:
- Damage
- Wear
- Deformation
- Cracks
- Corrosion
- Leaks
- Bends
- Twists

(b) Check all clamps for tightness and connections for leakage.

(c) Check that the hoses and lines are clear of sharp edges, moving parts and the exhaust system.

(d) Check that the lines installed in grommets pass through the center of the grommets.

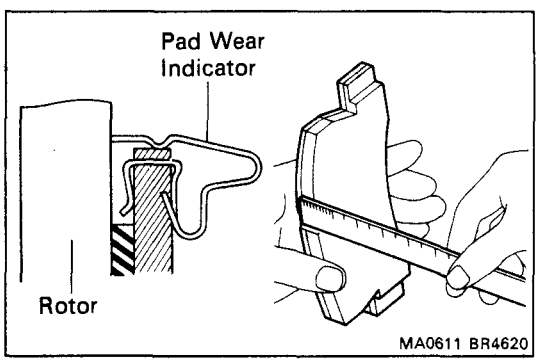

14. INSPECT BRAKE PADS AND DISCS

(a) Check the thickness of the disc brake pads and check for irregular wear.

Minimum pad thickness: 1.0 mm (0.039 in.)

HINT: If a squealing or scraping noise comes from the brake during driving, check the pad wear indicator to see if it is contacting the disc rotor. If so, the disc pad should be replaced.

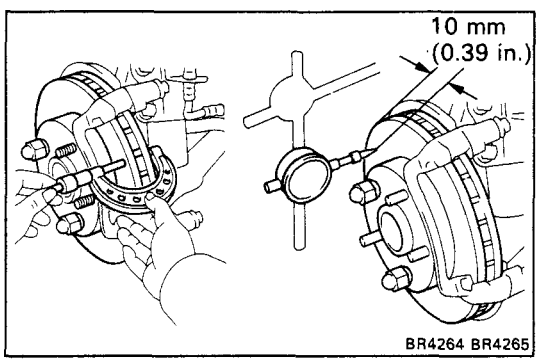

(b) Check the disc for wear or runout.

Minimum disc thickness:
Front 24.0 mm (0.787 in.)
Rear 15.0 mm (0.590 in.)

Maximum disc runout:
Front 0.07 mm (0.0028 in.)
Rear 0.10 mm (0.0039 in.)

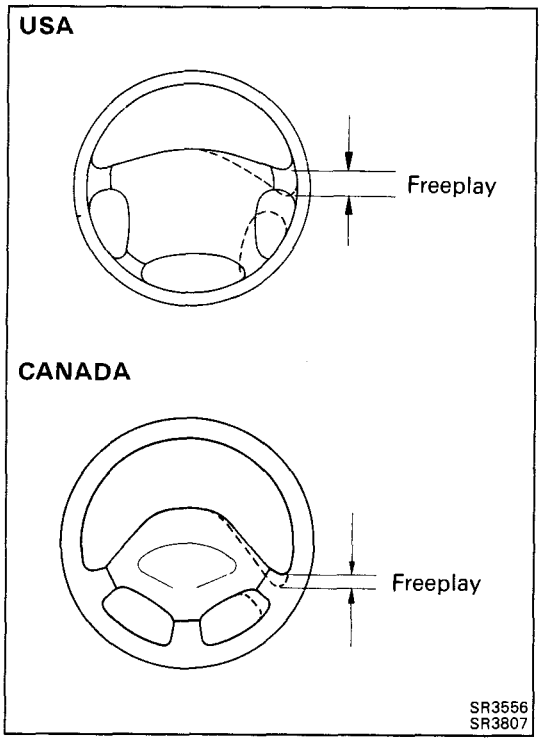

CHASSIS

15. INSPECT STEERING LINKAGE

(a) Check the steering wheel freeplay.

Maximum steering wheel freeplay: 30 mm (1.18 in.)

With the vehicle stopped and pointed straight ahead, rock the steering wheel gently back and forth with light finger pressure.

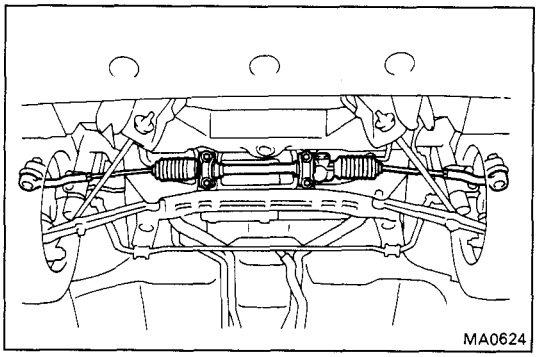

(b) Check the steering linkage for looseness or damage.

Check that:

- Tie rod ends do not have excessive play.
- Dust seals and boots are not damaged.
- Boot clamps are not loose.

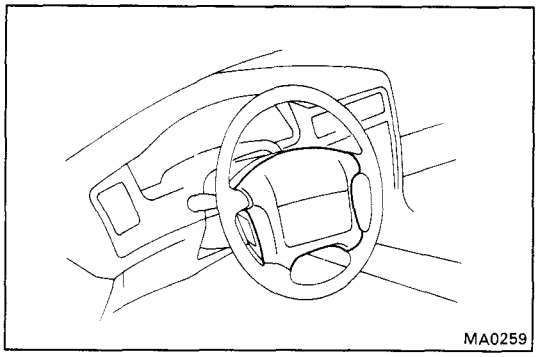

16. INSPECT SRS AIRBAG

Visually check the steering wheel pad (airbag and inflater).

- Use the diagnosis check to check if there are abnormalities.
- Check that there are no cuts, cracks or noticeable color changes on the surface of the steering wheel pad or in the center groove of the pad.
- Remove the steering wheel pad from the vehicle and check the wiring and steering wheel for damage and corrosion due to rusting, etc.

If necessary, replace the pad.

CAUTION:

- **For removal and replacement of the steering wheel pad, see page AB-15 and be sure to perform the operation in the correct order.**
- **Before disposing of the steering wheel pad, the airbag must first be deployed by using an SST (see page AB-82).**

17. INSPECT STEERING GEAR HOUSING OIL

Check the steering gear box for oil leakage.

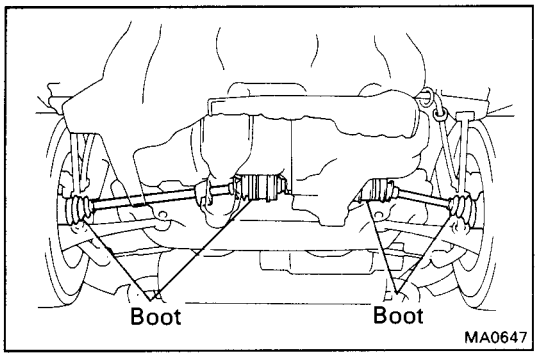

18. INSPECT DRIVE SHAFT BOOTS

Check the drive shaft boots for clamp looseness, leakage or damage.

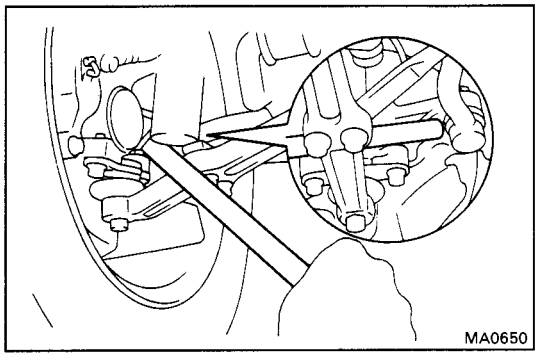

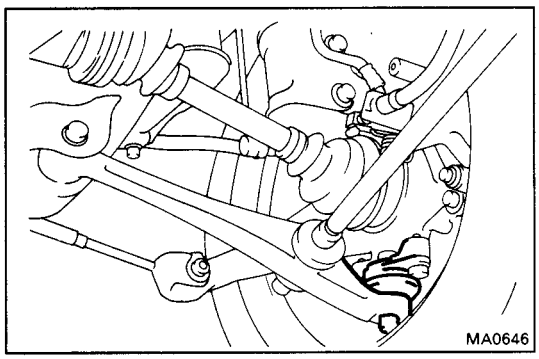

19. INSPECT BALL JOINTS AND DUST COVERS

(a) Inspect the ball joints for excessive looseness.

- Jack up the front of the vehicle and place wooden blocks with a height of 180 – 200 mm (7.09 – 7.87 in.) under the front tires.
- Lower the jack until there is about half a load on the front coil springs. Place stands under the vehicle for safety.
- Check that the front wheels are in a straight forward position, and block them with chocks.
- Using a lever, pry up the end of the lower arm, and check the amount of play.

Maximum ball joint vertical play: 0 mm (0 in.)

If there is play, replace the ball joint.

(b) Check the dust cover for damage.

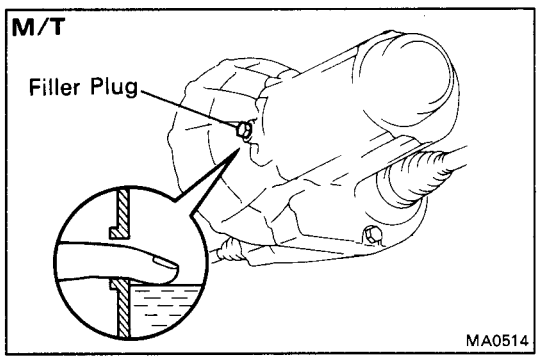

20. CHECK TRANSAXLE FLUID

A. (M/T)
Check manual transaxle oil (fluid)

(a) Visually check the transaxle for oil (fluid) leakage.

If leakage is found, check for the cause and repair.

(b) Remove the filler plug and feel inside the hole with your finger. Check that the oil (fluid) comes to within 5 mm (0.20 in.) of the bottom edge of the filler hole.

If the level is low, add oil (fluid) until it begins to run out the filler hole.

Transaxle oil (3S-GTE): See item 21 (A)

Transaxle fluid (5S-FE): See item 21 (A)

(c) Reinstall the filler plug securely.

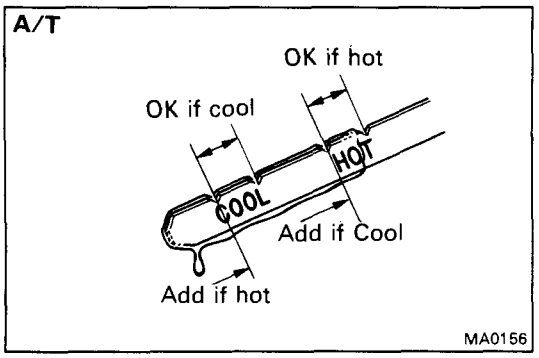

B. (A/T)
Check automatic transaxle fluid

(a) Visually check the transaxle for fluid leakage.
If leakage is found, check for the cause and repair.

(b) Check the fluid level
If the level is low, add fluid.

Transmission fluid: See item 21 (B)

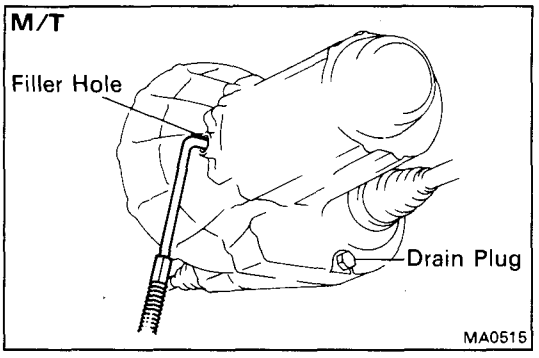

21. REPLACE TRANSAXLE OIL (FLUID)

A. (M/T)
Replace transaxle oil (fluid)

(a) Remove the filler and drain plugs, and drain the oil (fluid).

(b) Reinstall the drain plug securely.

(c) Add new oil (fluid) until it begins to run out of the filler hole.

(3S-GTE)

Transaxle oil: **Transaxle oil E50 (088885-80206) or equivalent**

Recommended transaxle oil:
Oil grade: **API GL-5**
Viscosity: **SAE 75W-90 or 80W-90**
Above – 18°C (0°F) SAE 90
Below – 18°C (0°F) SAE 80W

Capacity: **4.2 liters (4.4 US qts, 3.7 Imp. qts)**

(5S-FE)

Transaxle fluid: **ATF DEXRON II**

Capacity: **2.6 liters (2.7 US qts, 2.3 Imp. qts)**

(d) Reinstall the filler plug securely.

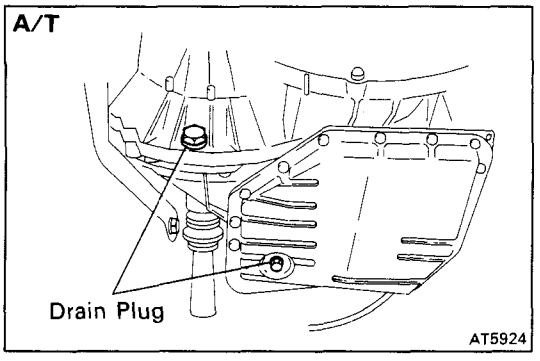

B. (A/T)
Replace transaxle fluid

(a) Remove the drain plugs, and drain the fluid.

(b) Reinstall the drain plugs securely.

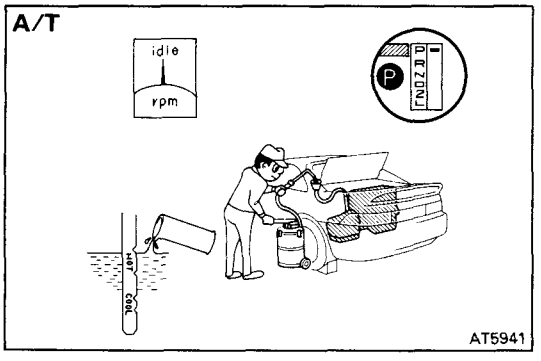

(c) With the engine OFF, add new fluid through the dipstick tube.

Transaxle fluid: **ATF DEXRON II**

Drain and refill capacity:
3.3 liters (3.6 US qts, 2.9 Imp. qts)

(d) Start the engine and shift the selector into all positions from "P" through "L", and then shift into "P".

(e) With the engine idling, check the fluid level. Add fluid up to the "COOL" level on the dipstick.

NOTICE: Do not overfill. The transmission and differential are separate units.

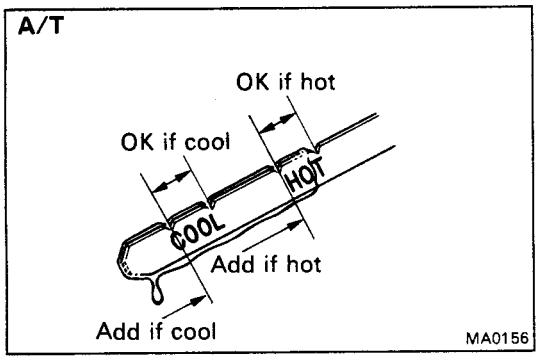

(f) Recheck the fluid level with the normal temperature (70 – 80°C (158 – 176°F)) and add as necessary.

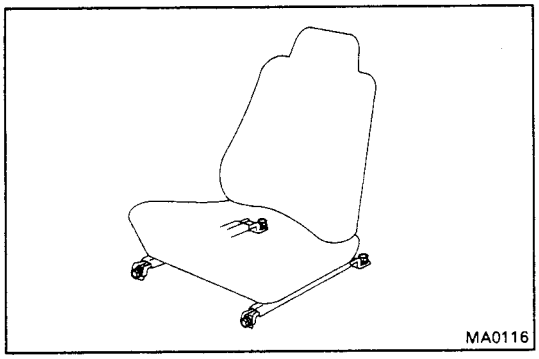

22. TIGHTEN BOLTS AND NUTS ON CHASSIS AND BODY

Tighten the following parts:

- Front seats mount bolts

Torque: 375 kg-cm (27 ft-lb, 37 N·m)

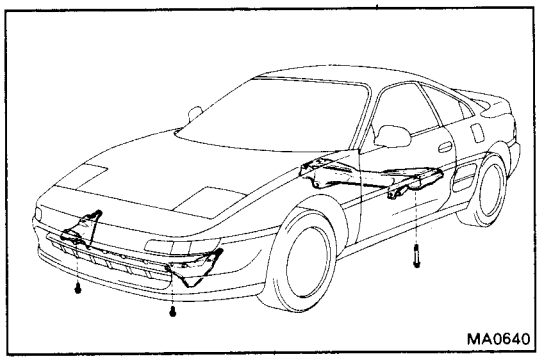

- Strut bar bracket-to-body mount bolts

Torque: 740 kg-cm (54 ft-lb, 73 N·m)

- Rear suspension lower crossmember-to-body mount bolts

Torque: 1,150 kg-cm (83 ft-lb, 113 N·m)

23. BODY INSPECTION

(a) Check the body exterior for dents, scratches and rust.

(b) Check the underbody for rust and damage.

24. ROAD TEST

(a) Check the engine and chassis for abnormal noises.

(b) Check that the vehicle does not wander or pull to one side.

(c) Check that the brakes work properly and do not drag.

25. FINAL INSPECTION

(a) Check the operation of the body parts:

- Hood
  Auxiliary catch operates properly
  Hood locks securely when closed
- Front and rear doors
  Door locks operate properly
  Doors close properly
- Luggage compartment door and back door
  Door lock operates properly
- Seats
  Seat adjusts easily and locks securely in any position
  Front seat back locks securely in any position
  Fold-down rear seat backs lock securely

(b) Be sure to deliver a clean car. Especially check:

- Steering wheel
- Shift lever knob
- All switch knobs
- Door handles
- Seats

GENERAL MAINTENANCE

These are the maintenance and inspection items which are considered to be the owner's responsibility. They can be performed by the owner or he can have them done at a service shop. These items include those which should checked on a daily basis, and in most cases, do not require (Special) tools and are considered to be reasonable for the owner to perform.Procedures for general maintenance are as follows.

OUTSIDE VEHICLE

1. **TIRES**
   (a) Check the pressure with a gauge. Adjust if necessary.
   (b) Check for cuts, damage or excessive wear.

2. **WHEEL NUTS**
   When checking the tires, check the nuts for looseness or for missing nuts. If necessary, tighten them.

3. **WINDSHIELD WIPER BLADES**
   Check for wear or cracks whenever they do not wipe clean. Replace if necessary.

4. **FLUID LEAKS**
   (a) Check underneath for leaking fuel, oil, water or other fluid.
   (b) If you smell gasoline fumes or notice any leak, have the cause found and corrected.

5. **DOORS AND ENGINE HOOD**
   (a) Check that all doors including the trunk lid and back door operate smoothly, and that all latches lock securely.
   (b) Check that the engine hood secondary latch secures the hood from opening when the primary latch is released.

INSIDE VEHICLE

6. **LIGHTS**
   (a) Check that the headlights, stop lights, taillights, turn signal lights, and other lights are all working.
   (b) Check the headlight aim.

7. **WARNING LIGHTS AND BUZZERS**
   Check that all warning lights and buzzers function properly.

8. **HORN**
   Check that it is working.

9. **WINDSHIELD GLASS**
   Check for scratches, pits or abrasions.

10. **WINDSHIELD WIPER AND WASHER**
    (a) Check operation of the wipers and washer.
    (b) Check that the wipers do not streak.

11. **WINDSHIELD DEFROSTER**
    Check that air comes out from the defroster outlet when operating the heater or air conditioner at defroster mode.

12. **REAR VIEW MIRROR**
    Check that it is mounted securely.

13. **SUN VISORS**
    Check that they move freely and are mounted securely.

14. **STEERING WHEEL**
    Check that it has specified freeplay. Be alert for changes in steering condition, such as hard steering, excessive freeplay or strange noise.

15. **SEATS**
    (a) Check that all front seat controls such as seat adjuster, seatback recliner, etc. operate smoothly.
    (b) Check that all latches lock securely in any position.
    (c) Check that the locks hold securely in any latched position.
    (d) Check that the head restraints move up and down smoothly and that the locks hold securely in any latched position.
    (e) For fold-down rear backs, check that the latches lock securely.

16. **SEAT BELTS**
    (a) Check that the seat belt system such as buckles, retractors and anchors operate properly and smoothly,.
    (b) Check that the belt webbing is not cut, frayed, worn or damaged.

17. ACCELERATOR PEDAL

Check the pedal for smooth operation and uneven pedal effort or catching.

18. CLUTCH PEDAL (See page CL-3)

Check the pedal for smooth operation.
Check that the pedal has the proper freeplay.

19. BRAKE PEDAL (See page BR-6)

(a) Check the pedal for smooth operation.

(b) Check that the pedal has the proper reserve distance and freeplay.

(c) Check the brake booster function.

20. BRAKES

At a safe place, check that the brakes do not pull to one side when applied.

21. PARKING BRAKE (See page BR-8)

(a) Check that the lever has the proper travel.

(b) On a safe incline, check that vehicle is held securely with only the parking brake applied.

22. AUTOMATIC TRANSMISSION "PARK"MECHANISM

(a) Check the lock release button of the selector lever proper and smooth operation.

(b) On a safe incline, check that vehicle is held securely with the selector lever in the "P" position and all brakes released.

UNDER HOOD

23. WINDSHIELD WASHER FLUID

Check that there is sufficient fluid in the tank.

24. ENGINE COOLANT LEVEL

Check that coolant level is between the "FULL" and "LOW" lines on the see-through reservoir.

25. RADIATOR AND HOSES

(a) Check that the front of the radiator is clean and not blocked with leaves, dirt or insects.

(b) Check the hoses for cracks, links, rot or loose connections.

26. BATTERY ELECTROLYTE LEVEL

Check that the electrolyte level of all battery cells is between the upper and lower level lines on the case. If level is low, add distilled.

27. BRAKE AND CLUTCH FLUID LEVELS

(a) Check that the brake fluid level is near the upper level line on the see-through reservoir.

(b) Check that the clutch fluid level is within ± 5 mm (0.20 in.) of the reservoir hem.

28. ENGINE DRIVE BELTS

Check all drive belts for fraying, cracks, wear or oiliness.

29. ENGINE OIL LEVEL

Check the level on the dipstick with the engine turned off.

30. POWER STEERING FLUID LEVEL

Check the level on the dipstick

The level should be in the "HOT" or "COLD" range depending on the fluid temperature.

31. AUTOMATIC TRANSMISSION FLUID LEVEL

(a) Park the vehicle on a level surface.

(b) With the engine idling and the parking brake applied, shift the selector into all positions from "P" to "L", and then shift into "P".

(c) Pull out the dipstick and wipe off the fluid with a clean rag. Reinsert the dipstick and check that the fluid level is in the HOT range.

(d) Perform this check with the fluid at normal driving temperature (70 – 80 °C or 158 – 176 °F).

HINT: Wait about 30 minutes before checking the fluid level after extended driving at high speeds in hot weather, driving in heavy traffic or with a trailer.

32. EXHAUST SYSTEM

Visually inspect for cracks, holes or loose supports.

If any change in the sound of the exhaust or smell of the exhaust fumes in noticed, have the cause located and corrected.

ENGINE MECHANICAL

	Page
DESCRIPTION (3S-GTE)	EM-2
DESCRIPTION (5S-FE)	EM-4
TROUBLESHOOTING	EM-6
ENGINE TUNE-UP	EM-10
TOYOTA-VARIABLE INDUCTION SYSTEM (T-VIS)	EM-22
IDLE AND/OR 2,500 RPM HC/CO CONCENTRATION CHECK METHOD	EM-23
COMPRESSION CHECK	EM-25
TIMING BELT (3S-GTE)	EM-26
TIMING BELT (5S-FE)	EM-47
CYLINDER HEAD (3S-GTE)	EM-61
CYLINDER HEAD (5S-FE)	EM-97
CYLINDER BLOCK (3S-GTE)	EM-133
CYLINDER BLOCK (5S-FE)	EM-181

DESCRIPTION (3S-GTE)

The 3S-GTE engine is an in-line, 4-cylinder, 2.0 liter DOHC 16-valve engine.

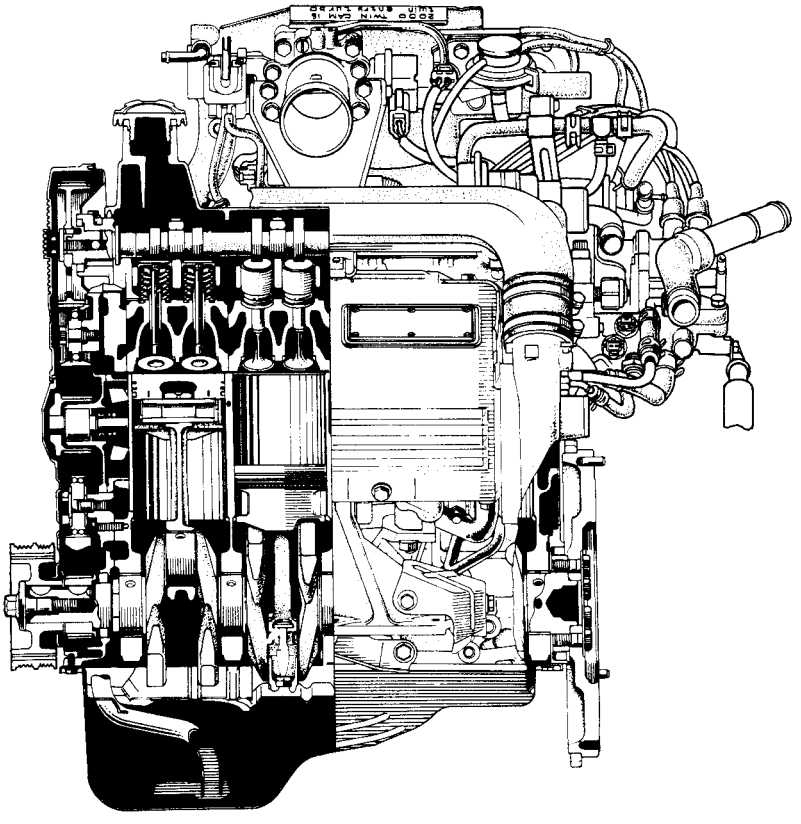

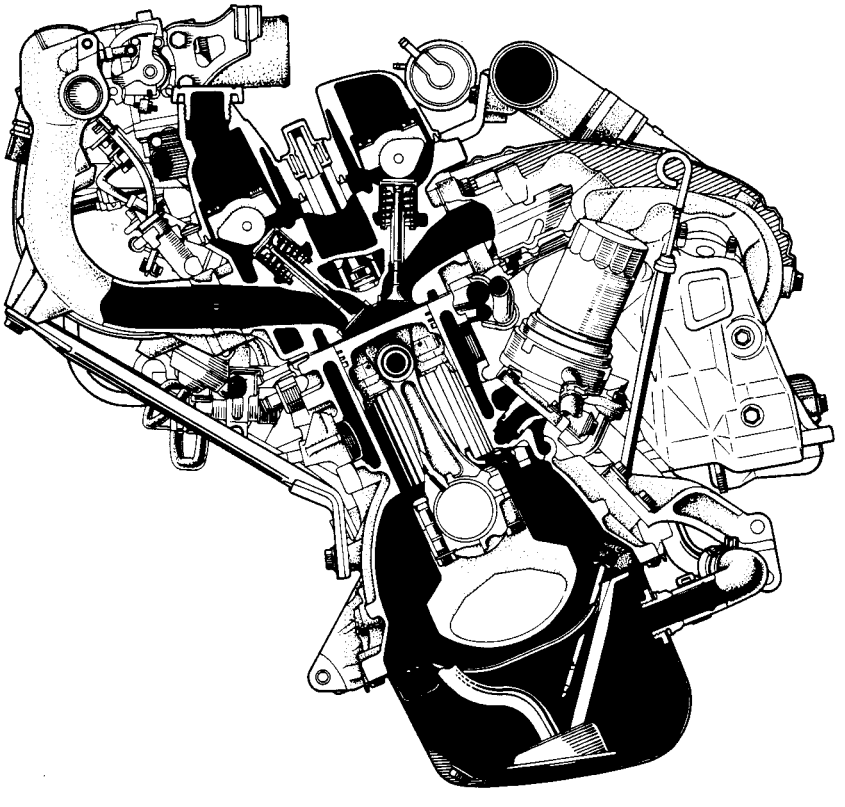

EM9134
EM9135

The 3S-GTE engines are an in-line, 4 cylinder engine with the cylinders numbered 1 – 2 – 3 – 4 from the front. The crankshaft is supported by 5 bearings inside the crankcase. These bearings are made of aluminum alloy.

The crankshaft is integrated with 8 weights for balance. Oil holes are placed in the center of the crankshaft to supply oil to the connecting rods, bearing, pistons and other components.

The firing order is 1 – 3 – 4 – 2. The cylinder head is made of aluminum alloy, with a cross flow type intake and exhaust layout and with pent-roof type combustion chambers. The spark plugs are located in the center of the combustion chambers.

The intake manifold has 8 independent long ports and utilizes the inertial super-charging effect to improve engine torque at low and medium speeds.

Both the intake camshaft and the exhaust camshaft are driven by a single timing belt. The cam journal is supported at 5 places between the valve lifters of each cylinder and on the front end of the cylinder head. Lubrication of the cam journals and cams are accomplis hed by oil supplied through the oiler port in the center of the camshaft.

Adjustment of the valve clearance is done by means of an outer shim type system, in which valve adjusting shims are located above the valve lifters. This permits replacement of the shims without removal of the camshafts.

Pistons are made of high temperature-resistant aluminum alloy, and a depression is built into the piston head to prevent interference with the valves.

Piston pins are the full-floating type, with the pins fastened to the neither piston boss nor connecting rods. Instead, snap rings are fitted on both ends of the pins, preventing the pins from falling out.

The No.1 compression ring is made of steel and the No.2 compression ring is made of cast iron. The oil ring is made of a combination of steel and stainless steel. The outer diameter of each piston ring is slightly larger than the diameter of the piston and the flexibility of the rings allows them to hug the cylinder walls when they are mounted on the piston. Compression rings No.1 and No.2 work to prevent gas leakage from the cylinder and an oil ring works to clear oil off the cylinder walls to prevent it from entering the combustion chambers.

The cylinder block is made of cast iron. It has 4 cylinders which are approximately twice the length of the piston stroke. The top of the cylinders are closed off by the cylinder head and the lower end of the cylinders becomes the crankcase, in which the crankshaft is installed. In addition, the cylinder block contains a water jacket, through which coolant is pumped to cool the cylinders.

The oil pan is bolted onto the bottom of the cylinder block. The oil pan is an oil reservoir made of pressed steel sheet. A dividing plate is included inside the oil pan to keep sufficient oil in the bottom of the pan even when the vehicle is tilted. This dividing plate also prevents the oil from making waves when the vehicle is stopped suddenly and thus shifting the oil away from the oil pump suction pipe.

DESCRIPTION (5S-FE)

The 5S-FE engine is an in-line, 4-cylinder, 2.2 liter DOHC 16-valve engine.

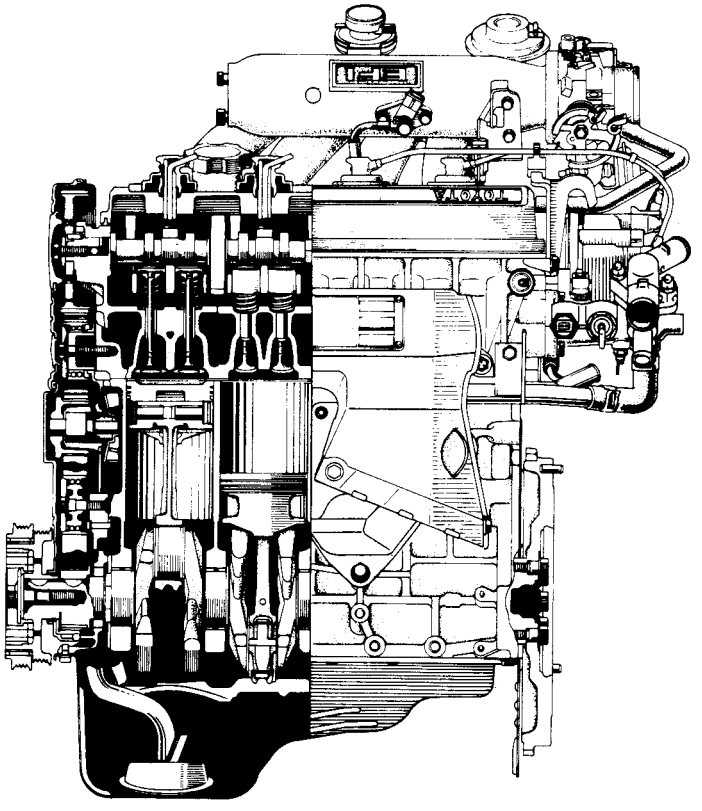

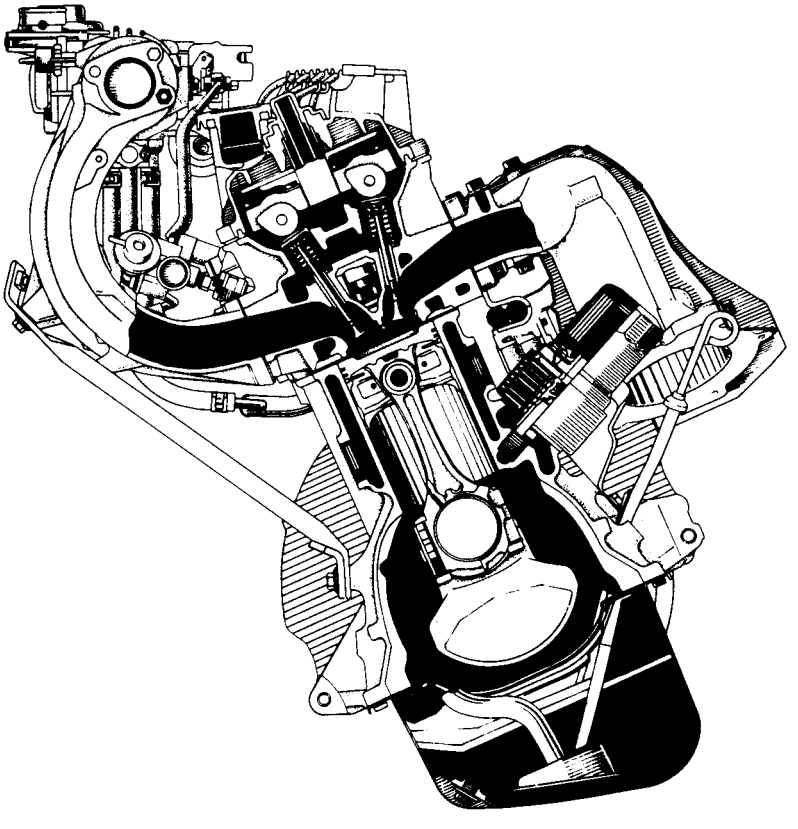

EM9092
EM9093

The 5S-FE engine is an in-line, 4 cylinder engine with the cylinders numbered 1 – 2 – 3 – 4 from the front. The crankshaft is supported by 5 bearings inside the crankcase. These bearings are made of aluminum alloy.

The crankshaft is integrated with 8 weights for balance. Oil holes are placed in the center of the crankshaft to supply oil to the connecting rods, bearing, pistons and other components.

The firing order is 1 – 3 – 4 – 2. The cylinder head is made of aluminum alloy, with a cross flow type intake and exhaust layout and with pent-roof type combustion chambers. The spark plugs are located in the center of the combustion chambers.

The intake manifold has 4 independent long ports and utilizes the inertial super-charging effect to improve engine torque at low and medium speeds.

Exhaust and intake valves are equipped with irregular pitch springs made of special valve spring carbon steel which are capable of functioning no matter what the engine speed.

The intake camshaft is driven by a timing belt, and a gear on the exhaust camshaft engages with a gear on the exhaust camshaft to drive it. The cam journal is supported at 5 places between the valve lifters of each cylinder and on the front end of the cylinder head. Lubrication of the cam journals and gears are accomplished by oil supplied through the oiler port in the center of the camshaft.

Adjustment of the valve clearance is done by means of an outer shim type system, in which valve adjusting shims are located above the valve lifters. This permits replacement of the shims without removal of the camshafts.

Pistons are made of high temperature-resistant aluminum alloy, and a depression is built into the piston head to prevent interference with the valves.

Piston pins are the full-floating type, with the pins fastened to the neither piston boss nor connecting rods. Instead, snap rings are fitted on both ends of the pins, preventing the pins from falling out.

The No.1 compression ring is made of steel and the No.2 compression ring is made of cast iron. The oil ring is made of a combination of steel and stainless steel. The outer diameter of each piston ring is slightly larger than the diameter of the piston and the flexibility of the rings allows them to hug the cylinder walls when they are mounted on the piston. Compression rings No.1 and No.2 work to prevent gas leakage from the cylinder and an oil ring works to clear oil off the cylinder walls to prevent it from entering the combustion chambers.

The cylinder block is made of cast iron. It has 4 cylinders which are approximately twice the length of the piston stroke. The top of the cylinders are closed off by the cylinder head and the lower end of the cylinders becomes the crankcase, in which the crankshaft is installed. In addition, the cylinder block contains a water jacket, through which coolant is pumped to cool the cylinders.

The oil pan is bolted onto the bottom of the cylinder block. The oil pan is an oil reservoir made of pressed steel sheet. A dividing plate is included inside the oil pan to keep sufficient oil in the bottom of the pan even when the vehicle is tilted. This dividing plate also prevents the oil from making waves when the vehicle is stopped suddenly and thus shifting the oil away from the oil pump suction pipe.

TROUBLESHOOTING

ENGINE OVERHEATING

Problem	Possible cause	Remedy	Page
Engine overheats	Cooling system faulty	Troubleshoot cooling system	CO-4
	Incorrect ignition timing	Reset timing	IG-17, 22

HARD STARTING

Problem	Possible cause	Remedy	Page
Engine will not crank or cranks slowly	Starting system faulty	Troubleshoot starting system	ST-2
Engine will not start/ hard to start (cranks OK)	No fuel supply to injector ● No fuel in tank ● Fuel pump no working ● Fuel filter clogged ● Fuel line clogged or leaking	Troubleshoot EFI system	FI-11
	EFI system problems	Repair as necessary	
	Ignition problems ● Ignition coil ● Igniter ● Distributor	Perform spark test	IG-5, 10
	Spark plug faulty	Inspect plugs	IG-6, 11
	High-tension cords disconnected or broken	Inspect cords	IG-6, 11
	Vacuum leaks ● PCV line ● EGR line ● Intake manifold ● T-VIS valve (3S-GTE) ● Throttle body ● ISC valve ● Brake booster line	Repair as necessary	
	Air suction between air flow meter and throttle body	Repair as necessary	
	Low compression	Check compression	EM-25

ROUGH IDLING

Problem	Possible cause	Remedy	Page
Rough idle, stalls or misses	Spark plug faulty	Inspect plugs	IG-6, 11
	High-tension cord faulty	Inspect cords	IG-6, 11
	Ignition problems		
	● Ignition coil	Inspect coil	IG-8, 12
	● Igniter	Inspect igniter	IG-9, 13
	● Distributor	Inspect distributor	IG-9, 13
	Incorrect ignition timing	Reset timing	IG-17, 22
	Vacuum leaks ● PCV line ● EGR line ● Intake manifold	Repair as necessary	

ROUGH IDLING (Cont'd)

Problem	Possible cause	Remedy	Page
Rough idle, stalls or misses (Cont'd)	● T-VIS valve (3S-GTE) ● Throttle body ● ISC valve ● Brake booster line		
	Air suction between air flow meter and throttle body		
	Incorrect idle speed	Check ISC system	FI-148, 151
	Incorrect valve clearance	Adjust valve clearance	EM-11, 16
	EFI system problems	Repair as necessary	
	Engine overheats	Check cooling system	CO-4
	Low compression	Check compression	EM-25

ENGINE HESITATES/POOR ACCELERATION

Problem	Possible cause	Remedy	Page
Engine hesitates/ poor acceleration	Spark plug faulty	Inspect plug	IG-6, 11
	High-tension cord faulty	Inspect cords	IG-6, 11
	Vacuum leaks ● PCV line ● EGR line ● Intake manifold ● T-VIS valve ● Throttle body ● ISC valve ● Brake booster line	Repair as necessary	
	Air suction between air flow meter and throttle body	Repair as necessary	
	Incorrect ignition timing	Reset timing	IG-17, 22
	Incorrect valve clearance	Adjust valve clearance	EM-11, 16
	Fuel system clogged	Check fuel system	
	Air cleaner clogged	Check air cleaner	MA-4
	EFI system probles	Repair as necessary	
	Emission control system problem (cold engine) ● EGR system always on	Check EGR system	EC-8, 24
	Engine overheats	Check cooling system	CO-4
	Low compression	Check compression	EM-25

ENGINE DIESELING

Problem	Possible cause	Remedy	Page
Engine diesels (runs after ignition switch is tuned off)	EFI system problems	Repair as necessary	
	Incorrect ignition timing	Reset timing	IG-17, 22
	EGR system faulty	Check EGR system	EC-8, 24

AFTER FIRE, BACKFIRE

Problem	Possible	remedy	Page
Muffler explosion (after fire) on deceleration only	Deceleration fuel cut system always off	Check EFI (fuel cut) system	
Muffler explosion (after fire) all the time	Air cleaner clogged	Check air cleaner	MA-4
	EFI system problem	Repair as necessary	
	Incorrect ignition timing	Reset timing	IG-17, 22
Engine backfires	EFI system problem	Repair as necessary	
	Vacuum leak ● PCV line ● EGR line ● Intake manifold ● T-VIS valve ● Throttle body ● ISC valve ● Brake booster line	Check hoses and repair as necessary	
	Air suction between air flow meter and throttle body	Repair as necessary	
	Insufficient fuel flow	Troubleshoot fuel system	FI-11
	Incorrect ignition timing	Reset timing	IG-17, 22
	Incorrect valve clearance	Adjust valve clearance	EM-11, 16
	Carbon deposits in combustion chambers	Inspect cylinder head	EM-74, 110

EXCESSIVE OIL CONSUMPTION

Problem	Possible cause	Remedy	Page
Excessive oil consumption	Oil leak	Repair as necessary	
	PCV line clogged	Check PCV system	
	Piston ring worn or damaged	Check rings	EM-185, 203
	Valve stem and guide bushing worn	Check valves and guide bushing	EM-75, 111
	Valve stem oil seal worn	Check seals	

EXCESSIVE FUEL CONSUMPTION

Problem	Possible cause	Remedy	Page
Poor gasoline mileage	Fuel leak	Repair as necessary	
	Air cleaner clogged	Check air cleaner	MA-4
	Incorrect ignition timing	Reset timing	IG-17, 22
	EFI system problems ● Injector faulty ● Deceleration fuel cut system faulty	Repair as necessary	
	Idle speed too high	Check ISC system	FI-148, 151
	Spark plug faulty	Inspect plugs	IG-6, 11
	EGR suustem always on	Check EGR system	EC-8, 24
	Low compression	Check compression	EM-25
	Tires improperly inflated	Inflate tire to proper pressure	
	Clutch slips	Troubleshoot clutch	
	Brakes drag	Trubleshoot brakes	

UNPLEASANT ODOR

Problem	Possible cause	Remedy	Page
Unpleasant odor	Incorrect idle speed	Check ISC system	FI-148, 151
	Incorrect ignition timing	Reset timing	IG-17, 22
	Vacuum leaks ● PCV line ● EGR line ● Intake manifold ● T-VIS valve ● Throttle body ● ISC valve ● Brake booster line	Repair as necessary	
	EFI system problems	Repair as necessary	

ENGINE TUNE-UP

INSPECTION OF ENGINE COOLANT

(See steps 1 and 2 on page CO-4)

INSPECTION OF ENGINE OIL

(See steps 1 and 2 on page LU-6)

INSPECTION OF BATTERY

(See steps 1 and 2 on page CH-3)

Standard specific gravity:
1.25 – 1.27 when fully charged at 20°C(68°F)

INSPECTION OF AIR FILTER

(See page MA-4)

INSPECTION OF HIGH-TENSION CORDS

(See page IG-6 or 11)

Maximum resistance: 25 kΩ per cord

INSPECTION OF SPARK PLUGS (5S-FE only)

(See page IG-11)

Correct electrode gap:	1.1 mm (0.043 in.)
Recommended spark plugs:	NDK16R-U11 NGK BKR5EYA11

INSPECTION AND ADJUSTMENT OF ALTERNATOR DRIVE BELT

(See step 3 on page CH-3)

Drive belt tension:	New belt	120 ± 20 lb
	Used belt	104 ± 20 lb

INSPECTION AND ADJUSTMENT OF VALVE CLEARANCE (3S-GTE)

HINT: Inspect and adjust the valve clearance when the engine is cold.

1. **DISCONNECT CABLE FROM NEGATIVE TERMINAL OF BATTERY**

   CAUTION: Work must be started after approx. 20 seconds or longer from the time the ignition switch is turned to the "LOCK" position and the negative (–) terminal cable is disconnected from the battery.

2. **REMOVE NO.1 AIR INTAKE CONNECTOR**
   (See step 4 on page TC-20)

3. **DISCONNECT HIGH-TENSION CORDS FROM SPARK PLUGS (See page IG-6)**

4. **REMOVE EGR VACUUM MODULATOR AND VSV**
   (See step 22 on page EM-66)

5. **REMOVE THROTTLE BODY**
   (See steps 3, 5 to 8, 10 and 11 on pages FI-135 and 136)

6. **REMOVE HOSE CLAMP AND VTV CLAMP OF AIR BY-PASS VALVE**
   (See steps 15 and 16 on page TC-9)

7. **REMOVE CYLINDER HEAD COVER**
   (See step 35 on page EM-70)

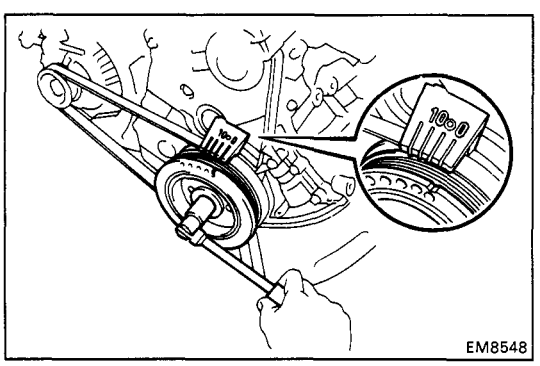

8. **SET NO.1 CYLINDER TO TDC/COMPRESSION**
   (a) Turn the crankshaft pulley and align its groove with timing mark "0" of the No.1 timing belt cover.
   (b) Check that the valve lifters on the No.1 cylinder are loose and valve lifters on No.4 are tight.

   If not, turn the crankshaft one revolution (360°) and align the mark as above.

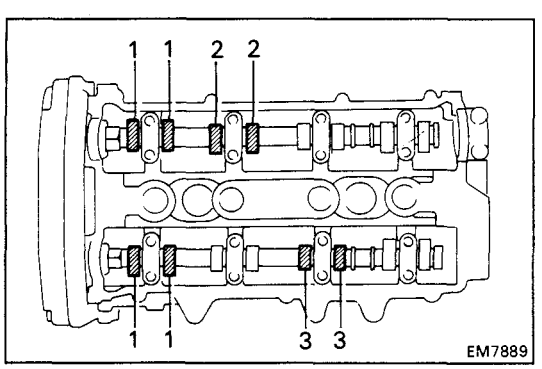

9. **INSPECT VALVE CLEARANCE**
   (a) Check only those valves indicated.
   - Using a feeler gauge, measure the clearance between the valve lifter and camshaft.
   - Record the specicifications of the valve clearance measurements. They will be used later to determine the required replacement adjusting shim.

   Valve clearance (Cold):
   Intake 0.15 – 0.25 mm (0.006 – 0.010 in.)
   Exhaust 0.20 – 0.30 mm (0.008 – 0.012 in.)

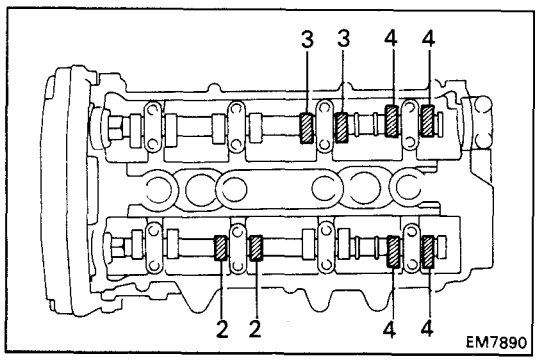

(b) Turn the crankshaft one revolution (360[) and align the mark as above. (See procedure step 8)

(c) Check only the valves indicated as shown. Measure the valve clearance. (See procedure step (a))

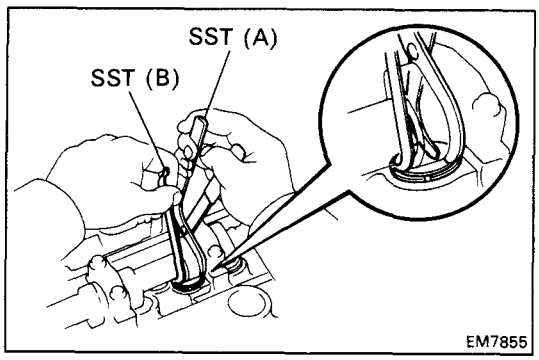

10. ADJUST VALVE CLEARANCE

(a) Remove the adjusting shim.

- Turn the crankshaft to position the cam lobe of the camshaft on the adjusting valve upward.
- Using SST (A), press down the valve lifter and place SST (B) between the camshaft and valve lifter. Remove SST (A).

SST 09248-55010

HINT: Before pressing down the valve lifter, position its notch toward the spark plug side.

- Remove the adjusting shim with small screwdriver and magnetic finger.

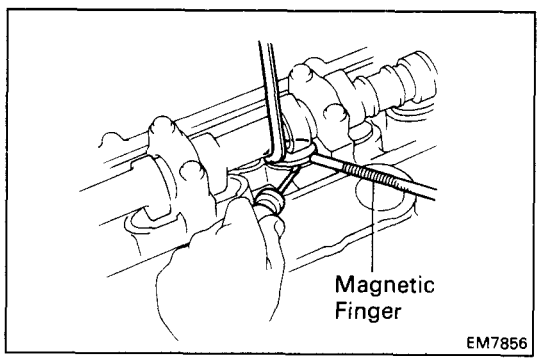

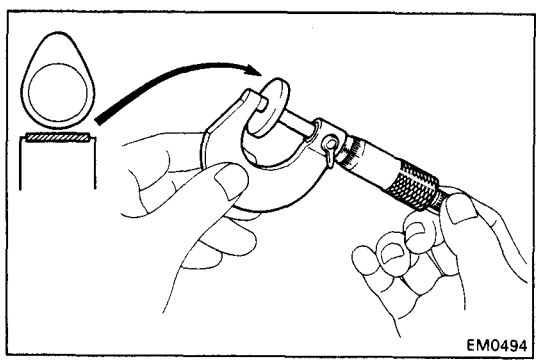

(b) Determine the replacement adjusting shim size by following the Formula or Charts:

- Using a micrometer, measure the thickness of the removal shim.
- Calculate the thickness of a new shim so that the valve clearance comes within the specified value.

T ..... Thickness of used shim
A ..... Measured valve clearance
N ..... Thickness of new shim

Intake N = T + (A – 0.20 mm (0.008 in.))
Exhaust N = T + (A – 0.25 mm (0.010 in.))

- Select a new shim with a thickness as close as possible to the calculated valve.

HINT: Shims are available in twenty-seven sizes of 0.05 mm (0.0020 in.), from 2.00 mm (0.0787 in.) to 3.30 mm (0.1299 in.).

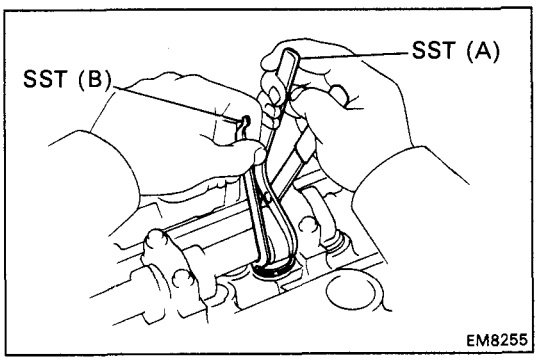

(c) Install a new adjusting shim.

- Place a new adjusting shim on the valve lifter.
- Using SST (A), press down the valve lifter and remove SST (B).

SST 09248-55010

(d) Recheck the valve clearance.

11. REINSTALL CYLINDER HEAD COVER
(See step 7 on page EM-88)

12. INSTALL HOSE CLAMP AND VTV CLAMP OF AIR BY-PASS VALVE
(See steps 13 and 14 on page TC-19)

13. REINSTALL THROTTLE BODY
(See steps 2, 3, 4 to 8 and 10 on pages FI-138 and 139)

14. REINSTALL EGR VACUUM MODULATOR AND VSV
(See step 20 on page EM-92)

15. RECONNECT HIGH-TENSION CORDS FROM SPARK PLUGS

16. REINSTALL NO.1 AIR INTAKE CONNECTOR
(See step 10 on page TC-25)

17. CONNECT CABLE TO NEGATIVE TERMINAL OF BATTERY

Adjusting Shim Selection Using Chart

INTAKE

| Measured clearance (mm) | Installed shim thickness (mm) | | |

Adjusting Shim Selection Using Chart

EXHAUST

| Measured clearance (mm) | Installed shim thickness (mm) | | |

INSPECTION AND ADJUSTMENT OF VALVE CLEARANCE (5S-FE)

HINT: Inspect and adjust the valve clearance when the engine is cold.

1. **DISCONNECT HIGH-TENSION CORDS FROM SPARK PLUGS (See page IG-11)**

2. **REMOVE CYLINDER HEAD COVER (See step 32 on page EM-104)**

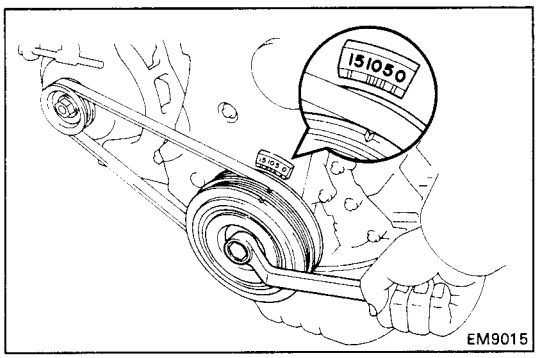

3. **SET NO.1 CYLINDER TO TDC/COMPRESSION**
   (a) Turn the crankshaft pulley and align its groove with timing mark "0" of the No.1 timing belt cover.
   (b) Check that the valve lifters on the No.1 cylinder are loose and valve lifters on the No.4 are tight.

   If not, turn the crankshaft one revolution (360°) and align the mark as above.

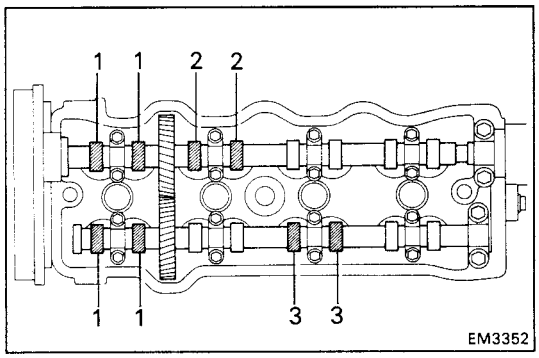

4. **INSPECT VALVE CLEARANCE**
   (a) Check only those valves indicated.
   - Using a feeler gauge, measure the clearance between the valve lifter and camshaft.
   - Record out of the specicification valve clearance measurements. They will be used later to determine the required replacement adjusting shim.

   Valve clearance (Cold):
   Intake 0.19 – 0.29 mm (0.007 – 0.011 in.)
   Exhaust 0.28 – 0.38 mm (0.011 – 0.015 in.)

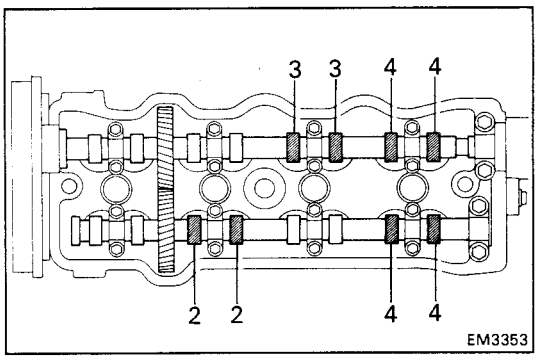

   (b) Turn the crankshaft one revolution (360°) and align the mark as above. (See procedure step 3)
   (c) Check only the valves indicated as shown. Measure the valve clearance. (See procedure step (a))

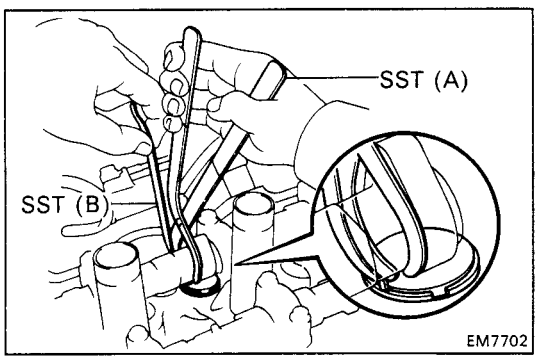

5. **ADJUST VALVE CLEARANCE**
   (a) Remove the adjusting shim.
   - Turn the crankshaft to position the cam lobe of the camshaft on the adjusting valve upward.
   - Using SST (A), press down the valve lifter and place SST (B) between the camshaft and valve lifter. Remove SST (A).

   SST 09248-55010

   HINT: Before pressing down the valve lifter, position its notch toward the spark plug side.

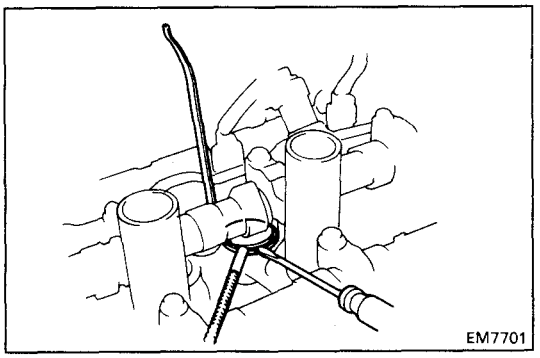

- Remove the adjusting shim with small screwdriver and magnetic finger.

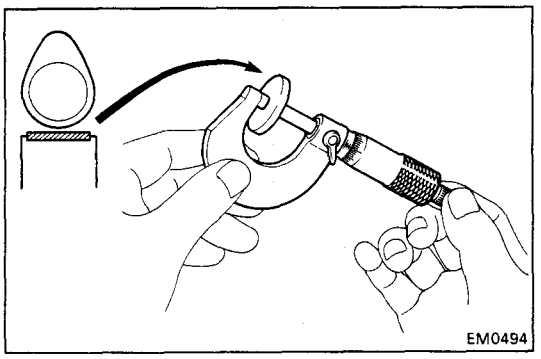

(b) Determine the replacement adjusting shim size by following the Formula or Charts:

- Using a micrometer, measure the thickness of the removal shim.
- Calculate the thickness of a new shim so that the valve clearance comes within specified value.

T ..... Thickness of used shim
A ..... Measured valve clearance
N ..... Thickness of new shim

Intake N = T + (A – 0.24 mm (0.009 in.))
Exhaust N = T + (A – 0.33 mm (0.013 in.))

- Select a new shim with a thickness as close as possible to the calculated valve.

HINT: Shims are available in seventeen sizes of 0.05 mm (0.0020 in.), from 2.50 mm (0.0984 in.) to 3.30 mm (0.1299 in.).

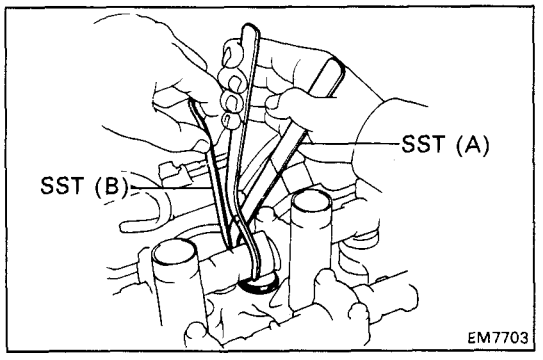

(c) Install a new adjusting shim.

- Place a new adjusting shim on the valve lifter.
- Using SST (A), press down the valve lifter and remove SST (B).

SST 09248-55010

(d) Recheck the valve clearance.

6. **REINSTALL CYLINDER HEAD COVER**
(See step 7 on page EM-126)

7. **RECONNECT HIGH-TENSION CORDS TO SPARK PLUGS**

Adjusting Shim Selection Using Chart

INTAKE

| Measured clearance (mm) | Installed shim thickness (mm) | | |

Adjusting Shim Selection Using Chart

EXHAUST

Measured clearance (mm)	Installed shim thickness (mm)																																															
	2.500	2.550	2.600	2.620	2.640	2.650	2.660	2.680	2.700	2.720	2.740	2.750	2.760	2.780	2.800	2.820	2.840	2.850	2.860	2.880	2.900	2.920	2.940	2.950	2.960	2.980	3.000	3.020	3.040	3.050	3.060	3.080	3.100	3.120	3.140	3.150	3.160	3.180	3.200	3.250	3.300
0.000-0.025													02	02	02	02	02	04	04	04	06	06	06	08	08	08	10	10	10	12	12	12	14	14	14	16	16	16	18	20	22
0.026-0.050											02	02	02	02	02	04	04	04	04	06	06	08	08	08	08	10	10	12	12	12	12	14	14	16	16	16	16	18	18	20	22
0.051-0.075										02	02	02	02	02	04	04	04	06	06	06	08	08	08	10	10	10	12	12	12	14	14	14	16	16	16	18	18	18	20	22	24
0.076-0.100								02	02	02	02	02	02	04	04	06	06	06	06	08	08	10	10	10	10	12	12	14	14	14	14	16	16	18	18	18	18	20	20	22	24
0.101-0.125							02	02	02	02	02	04	04	04	06	06	06	08	08	08	10	10	10	12	12	12	14	14	14	16	16	16	18	18	18	20	20	20	22	24	26
0.126-0.150					02	02	02	02	02	04	04	04	04	06	06	08	08	08	08	10	10	12	12	12	12	14	14	16	16	16	16	18	18	20	20	20	20	22	22	24	26
0.150-0.175				02	02	02	02	02	04	04	04	06	06	06	08	08	08	10	10	10	12	12	12	14	14	14	16	16	16	18	18	18	20	20	20	22	22	22	24	26	28
0.176-0.200			02	02	02	02	02	04	04	06	06	06	06	08	08	10	10	10	10	12	12	14	14	14	14	16	16	18	18	18	18	20	20	22	22	22	22	24	24	26	28
0.201-0.225			02	02	02	04	04	04	06	06	06	08	08	08	10	10	10	12	12	12	14	14	14	16	16	16	18	18	18	20	20	20	22	22	22	24	24	24	26	28	30
0.226-0.250		02	02	04	04	04	04	06	06	08	08	08	08	10	10	12	12	12	12	14	14	16	16	16	16	18	18	20	20	20	20	22	22	24	24	24	24	26	26	28	30
0.251-0.275		02	04	04	04	06	06	08	08	08	08	10	10	10	12	12	12	14	14	14	16	16	16	18	18	18	20	20	20	22	22	22	24	24	24	26	26	26	28	30	32
0.275-0.279		02	04	04	06	06	06	08	08	08	10	10	10	12	12	12	14	14	14	16	16	16	18	18	18	20	20	20	22	22	22	24	24	24	26	26	26	28	28	30	32
0.280-0.380																																									
0.381-0.400	04	06	08	10	10	10	10	12	12	14	14	14	14	16	16	18	18	18	18	20	20	22	22	22	22	24	24	26	26	26	26	28	28	30	30	30	30	32	32	34	
0.401-0.425	06	08	10	10	10	12	12	12	14	14	14	16	16	16	18	18	18	20	20	20	22	22	22	24	24	24	26	26	26	28	28	28	30	30	30	32	32	32	34	34	
0.426-0.450	06	08	10	12	12	12	12	14	14	16	16	16	16	18	18	20	20	20	20	22	22	24	24	24	24	26	26	28	28	28	28	30	30	32	32	32	32	34	34		
0.451-0.475	08	10	12	12	12	14	14	14	16	16	16	18	18	18	20	20	20	22	22	22	24	24	24	26	26	26	28	28	28	30	30	30	32	32	32	34	34	34	34		
0.476-0.500	08	10	12	14	14	14	14	16	16	18	18	18	18	20	20	22	22	22	22	24	24	26	26	26	26	28	28	30	30	30	30	32	32	34	34	34	34				
0.501-0.525	10	12	14	14	14	16	16	16	18	18	18	20	20	20	22	22	22	24	24	24	26	26	26	28	28	28	30	30	30	32	32	32	34	34	34	34					
0.526-0.550	10	12	14	16	16	16	16	18	18	20	20	20	20	22	22	24	24	24	24	26	26	28	28	28	28	30	30	32	32	32	32	34	34	34							
0.551-0.575	12	14	16	16	16	18	18	18	20	20	20	22	22	22	24	24	24	26	26	26	28	28	28	30	30	30	32	32	32	34	34	34	34								
0.576-0.600	12	14	16	18	18	18	18	20	20	22	22	22	22	24	24	26	26	26	26	28	28	30	30	30	30	32	32	34	34	34	34	34									
0.601-0.625	14	16	18	18	18	20	20	20	22	22	22	24	24	24	26	26	26	28	28	28	30	30	30	32	32	32	34	34	34	34											
0.626-0.650	14	16	18	20	20	20	20	22	22	24	24	24	24	26	26	28	28	28	28	30	30	32	32	32	32	34	34	34													
0.651-0.675	16	18	20	20	20	22	22	22	24	24	24	26	26	26	28	28	28	30	30	30	32	32	32	34	34	34	34														
0.676-0.700	16	18	20	22	22	22	22	24	24	26	26	26	26	28	28	30	30	30	30	32	32	34	34	34	34	34															
0.701-0.725	18	20	22	22	22	24	24	24	26	26	26	28	28	28	30	30	30	32	32	32	34	34	34	34																	
0.726-0.750	18	20	22	24	24	24	24	26	26	28	28	28	28	30	30	32	32	32	32	34	34	34																			
0.751-0.775	20	22	24	24	24	26	26	26	28	28	28	30	30	30	32	32	32	34	34	34	34																				
0.776-0.800	20	22	24	26	26	26	26	28	28	30	30	30	30	32	32	34	34	34	34	34																					
0.801-0.825	22	24	26	26	26	28	28	28	30	30	30	32	32	32	34	34	34	34																							
0.826-0.850	22	24	26	28	28	28	28	30	30	32	32	32	32	34	34	34																									
0.851-0.875	24	26	28	28	28	30	30	30	32	32	32	34	34	34	34																										
0.876-0.900	24	26	28	30	30	30	30	32	32	34	34	34	34	34																											
0.901-0.925	26	28	30	30	30	32	32	32	34	34	34	34																													
0.926-0.950	26	28	30	32	32	32	32	34	34	34																															
0.951-0.975	28	30	32	32	32	34	34	34	34																																
0.976-1.000	28	30	32	34	34	34	34	34																																	
1.001-1.025	30	32	34	34	34	34																																			
1.026-1.050	30	32	34	34																																					
1.051-1.075	32	34	34																																						
1.076-1.100	32	34																																							
1.101-1.125	34	34																																							
1.126-1.180	34																																								

New shim thickness mm (in.)

Shim No.	Thickness	Shim No.	Thickness
02	2.50 (0.0984)	20	2.95 (0.1161)
04	2.55 (0.1004)	22	3.00 (0.1181)
06	2.60 (0.1024)	24	3.05 (0.1201)
08	2.65 (0.1043)	26	3.10 (0.1220)
10	2.70 (0.1063)	28	3.15 (0.1240)
12	2.75 (0.1083)	30	3.20 (0.1260)
14	2.80 (0.1102)	32	3.25 (0.1280)
16	2.85 (0.1122)	34	3.30 (0.1299)
18	2.90 (0.1142)		

Exhaust valve clearance (Cold):
0.28 – 0.38 mm (0.011 – 0.015 in.)

EXAMPLE: The 2.800 mm (0.1102 in.) shim is installed, and the measured clearance is 0.450 mm (0.0177 in.). Replace the 2.800 mm (0.1102 in.) shim with a No.18 shim.

INSPECTION AND ADJUSTMENT OF IGNITION TIMING

3S-GTE (See pages IG-17 and 18)
5S-FE (See pages IG-21 and 22)

Ignition timing:
10° BTDC @ idle
(w/ Terminals TE1 and E1 connected)

INSPECTION OF IDLE SPEED (3S-GTE)

INITIAL CONDITIONS

(See Inspection and Adjustment of Idle Speed (5S-FE))

Idle speed: 800 ± 50 rpm

INSPECTION AND ADJUSTMENT OF IDLE SPEED (5S-FE)

(See HINT on page FI-18)

1. **INITIAL CONDITIONS**
   (a) Engine at normal operating temperature
   (b) Air cleaner installed
   (c) All pipes and hoses of air induction system connected
   (d) All vacuum lines connected

   HINT: All vacuum hoses for EGR systems, etc. should be properly connected.

   (e) EFI system wiring connectors fully plugged
   (f) All operating accessories switched OFF
   (g) Transmission in neutral range

2. **CHECK ISC SYSTEM (See page FI-151)**

3. **CONNECT TACHOMETER (See page IG-21)**

4. **ADJUST IDLE SPEED**
   (a) Using SST, connect terminals TE1 and E1 of the check connector.

   SST 09843-18020

   HINT: Decrease the rpm after the engine maintains a speed of the 1,000 – 1,300 rpm for 5 seconds.

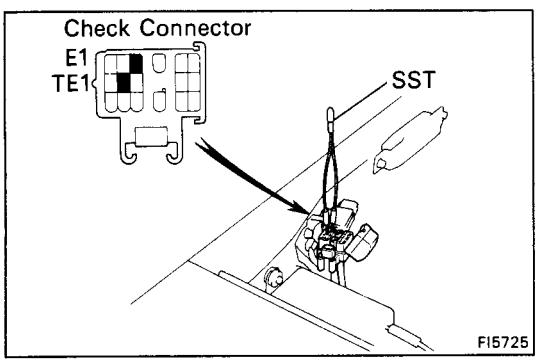

   (b) Check the idle speed.

   Idle speed: 650 rpm or more

   (c) If the idle speed is not as specified, adjust the idle speed by turning the IDLE SPEED ADJUSTING SCREW.

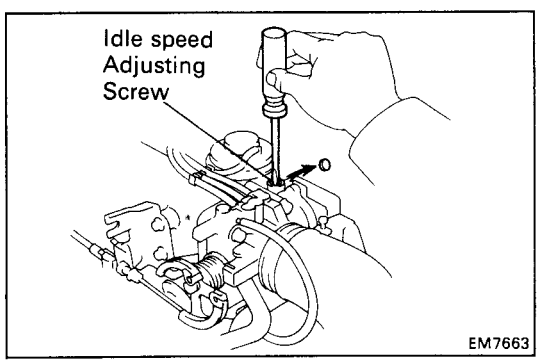

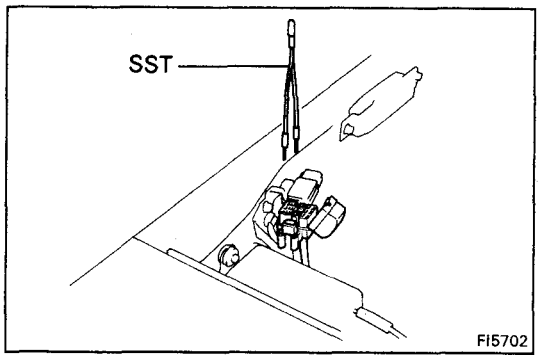

(d) Remove SST.
SST 09843-18020

5. **FURTHER CHECK IDLE SPEED**

Idle speed: 750 ± 50 rpm USA M/T
700 ± 50 rpm USA A/T
850 ± 50 rpm CANADA M/T
750 ± 50 rpm CANADA A/T

If the idle speed is not within these values, carry out either of the below listed procedures and then recheck the idle speed.

Carry out a driving test, including stop-go several times at a speed above 10 km/h, or start the engine, idle for 30 seconds and then turn the engine off repeatedly. By doing this, idle data will be stored in the ISC and the idle rpm will be at specified value.

TOYOTA-VARIABLE INDUCTION SYSTEM (T-VIS) (3S-GTE)

INSPECTION OF T-VIS

1. **WARM UP AND STOP ENGINE**

   Allow the engine to warm up to normal operating temperature.

2. **CONNECT TACHOMETER (See page IG-17)**

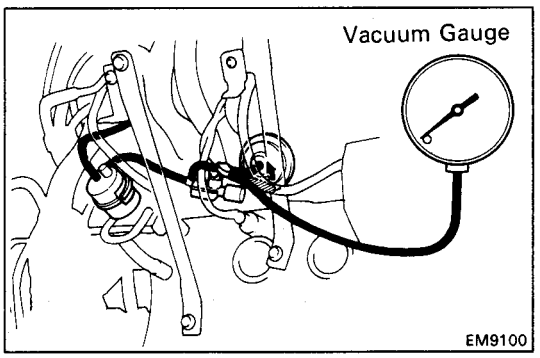

3. **CONNECT VACUUM GAUGE**

   Using a 3-way connector, connect the vacuum gauge to the hose between the VSV and actuator.

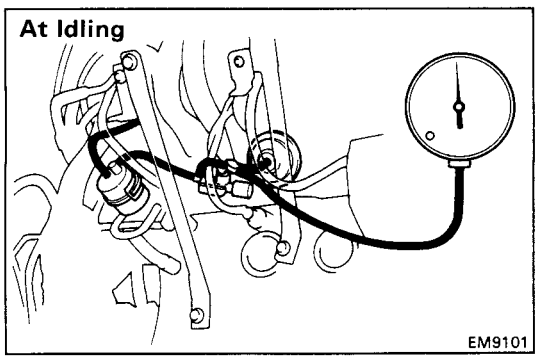

4. **INSPECT T-VIS OPERATION**

   (a) Check that the vacuum gauge indicates vacuum at idling.

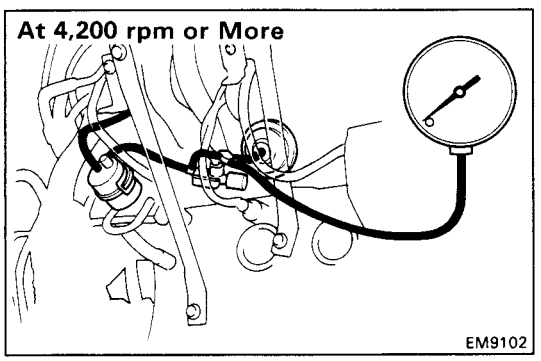

   (b) Check that the vacuum gauge indicates zero at 4,200 rpm or more.

   HINT: If regular unleaded gasoline is used, the vacuum gauge also indicates zero below 4,200 rpm.

IDLE AND/OR 2,500 RPM HC/CO CONCENTRATION CHECK METHOD

HINT: This check is used only to determine whether or not the idle HC/CO complies with regulations.

1. **INITIAL CONDITIONS**
   (a) Engine at normal operating temperature
   (b) Air cleaner installed
   (c) All pipes and hoses of air induction system connected
   (d) All accessories switched OFF
   (e) All vacuum lines properly connected

   HINT: All vacuum hoses for EGR systems, etc. should be properly connected.

   (f) EFI system wiring connectors fully plugged
   (g) Ignition timing set correctly
   (h) Transmission in neutral
   (i) Tachometer and HC/CO meter calibrated and at hand.

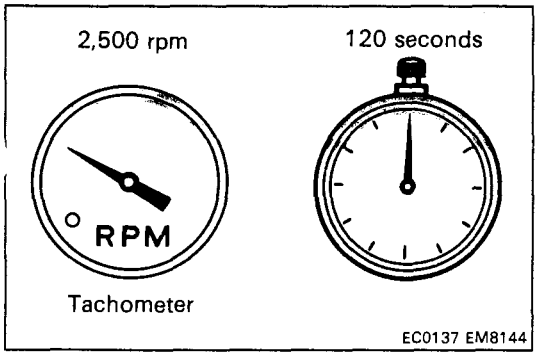

2. **START ENGINE**

3. **RACE ENGINE AT 2,500 RPM FOR APPROX. 120 SECOUNDS**

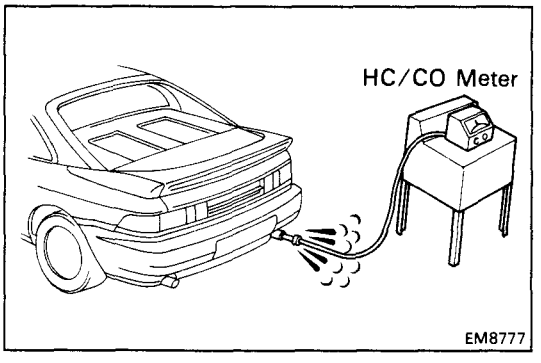

4. **INSERT HC/CO METER TESTING PROBE INTO TAILPIPE AT LEAST 40 cm (1.3 ft)**

5. **CHECK HC/CO CONCENTRATION AT IDLE AND/OR 2,500 RPM**

   Complete the measuring within three minutes.

   HINT: When performing the 2 mode (2,500 rpm and idle) test, follow the measurement order prescribed by the regulations.

   If the HC/CO concentration at 2,500 rpm does not conform to regulations, try the following procedure.

   Race the engine again at 2,500 rpm for approx. 1 minute and quickly repeat steps 4 and 5 above. This may correct the problem.

Troubleshooting

If the HC/CO concentration does not comply with regulations, perform troubleshooting in the order given below.

(a) Check oxygen sensor operation.
(See page FI-173)

(b) See the table below for possible causes, and then inspect and correct the applicable causes if necessary.

HC	CO	Problems	Causes
High	Normal	Rough idle	1. Faulty ignitions ● Incorrect timing ● Fouled, shorted or improperly gapped plugs ● Open or crossed high-tension cords ● Cracked distributor cap 2. Incorrect valve clearance 3. Leaky EGR valve 4. Leaky intake and exhaust valves 5. leaky cylinder
High	Low	Rough idle (Fluctuating HC reading)	1. Vacuum leaks ● PCV hose ● EGR valve ● Intake manifold ● T-VIS valve (3S-GTE) ● Throttle body ● ISC valve ● Brake booster line 2. Lean mixture causing misfire
High	High	Rough idle (Black smoke from exhaust)	1. Restricted air filter 2. Faulty EFI systems ● Faulty pressure regulator ● Clogged fuel return line ● Defective water temp. sensor ● Defective air temp. sensor ● Faulty ECU ● Faulty injector ● Faulty cold start injector ● Faulty throttle position sensor ● Air flow meter

COMPRESSION CHECK

HINT: If there is lack of power, excessive oil consumption or poor fuel economy, measure the compression pressure.

1. **WARM UP AND STOP ENGINE**

   Allow the engine to warm up to normal operating temperature.

2. **(3S-GTE)**
   DISCONNECT SOLENOID RESISTOR CONNECTOR

3. **DISCONNECT COLD START INJECTOR CONNECTOR**

4. **DISCONNECT DISTRIBUTOR CONNECTOR**

5. **REMOVE SPARK PLUGS (See page IG-6 or 11)**

6. **CHECK CYLINDER COMPRESSION PRESSURE**

   (a) Insert a compression gauge into the spark plug hole.

   (b) Fully open the throttle.

   (c) While cranking the engine, measure the compression pressure.

   HINT: Always use a fully charged battery to obtain engine speed of 250 rpm or more.

   (d) Repeat steps (a) through (c) for each cylinder.

   NOTICE: This measurement must be done in as short a time as possible.

   Compression pressure:

3S-GTE	**11.5 kg/cm² (164 psi, 1,128 kPa) or more**
5S-FE	**12.5 kg/cm² (178 psi, 1,226 kPa) or more**

   Minimum pressure:

3S-GTE	**9.0 kg/cm² (128 psi, 883 kPa)**
5S-FE	**10.0 kg/cm² (142 psi, 981 kPa)**

   Difference between each cylinder:
   1.0 kg/cm² (14 psi, 98 kPa) or less

   (e) If the cylinder compression in one or more cylinders are low, pour a small amount of engine oil into the cylinder through the spark plug hole and repeat steps (a) through (c) for cylinders with low compression.

   - If adding oil helps the compression, chances are that the piston rings and/or cylinder bore are worn or damaged.
   - If pressure stays low, a valve may be sticking or seating is improper, or there may be leakage past the gasket.

7. **REINSTALL SPARK PLUGS (See page IG-8 or 12)**

   Torque: 180 kg-cm (13 ft-lb, 18 N·m)

8. **RECONNECT DISTRIBUTOR CONNECTOR**

9. **RECONNECT COLD START INJECTOR CONNECTOR**

10. **(3S-GTE)**
    RECONNECT SOLENOID RESISTOR CONNECTOR

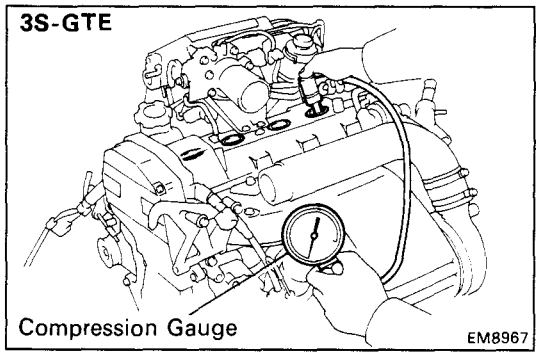

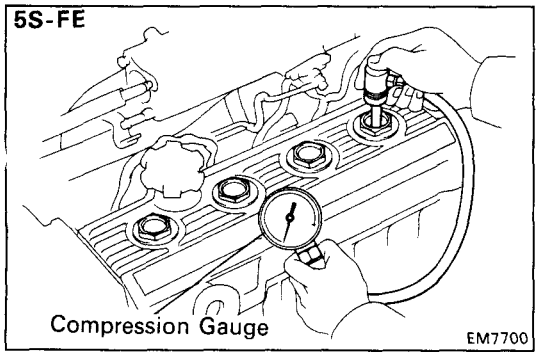

TIMING BELT (3S-GTE)

COMPONENTS

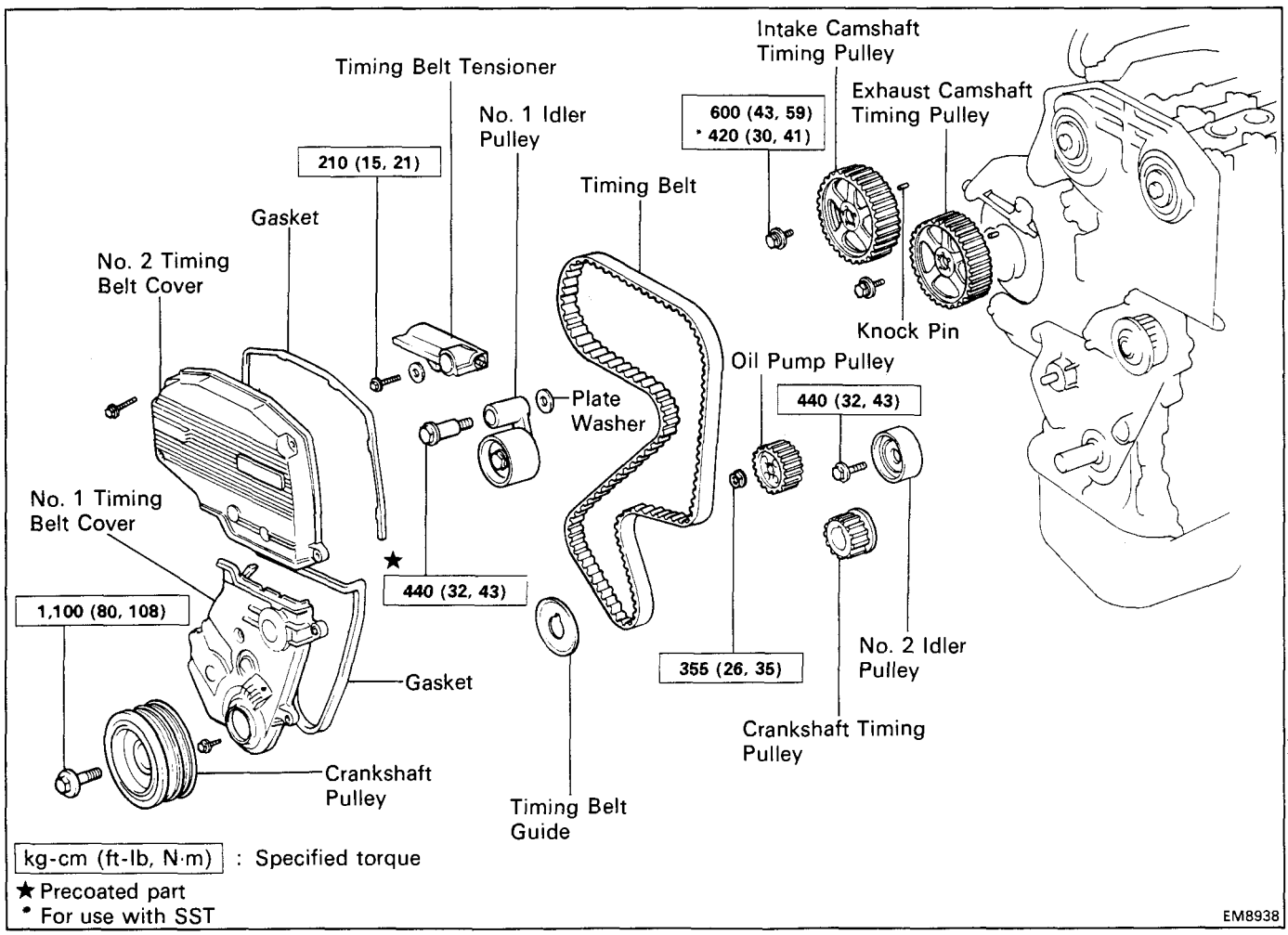

REMOVAL OF TIMING BELT

1. **DISCONNECT CABLE FROM NEGATIVE TERMINAL OF BATTERY**

   CAUTION: Work must be started after approx. 20 seconds or longer from the time the ignition switch is turned to the "LOCK" position and the negative (–) terminal cable is disconnected from the battery.

2. **REMOVE ENGINE UNDER COVERS**

3. **REMOVE RH ENGINE HOOD SIDE PANEL**

4. **REMOVE SUSPENSION UPPER BRACE**
   (See step 8 on page EM-134)

5. **REMOVE CRUISE CONTROL ACTUATOR (w/ CRUISE CONTROL SYSTEM) AND ACCELERATOR LINKAGE**
   (See step 13 on page EM-135)

6. **REMOVE INTERCOOLER**
   (See steps 4, 5 and 7 to 13 on pages TC-20 to 22)

7. **REMOVE RH FRONT WHEEL**

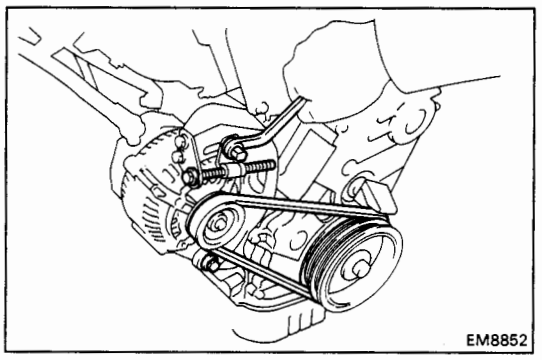

8. REMOVE ALTERNATOR DRIVE BELT

(a) Loosen the pivot and adjusting lock bolts.

(b) Loosen the adjusting bolt, and remove the drive belt.

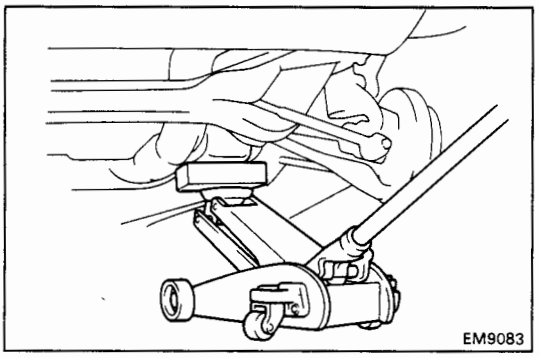

9. SLIGHTLY JACK UP ENGINE

Raise the engine enough to remove the weight from the engine mounting on the right side.

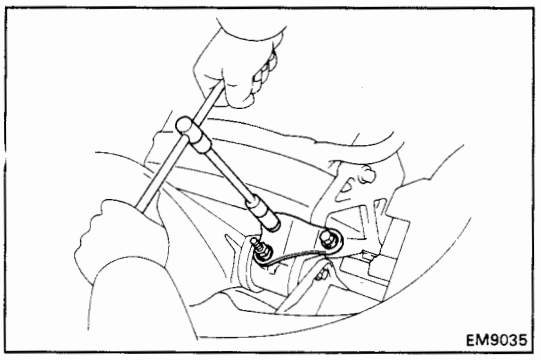

10. REMOVE RH ENGINE MOUNTING STAY

Remove the two bolts, nut and mounting stay.

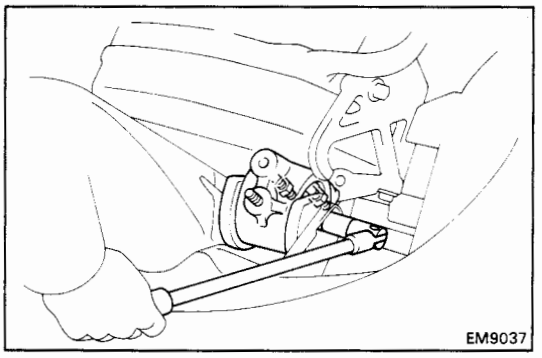

11. REMOVE RH ENGINE MOUNTING INSULATOR

Remove the through bolt, two nuts and mounting insulator.

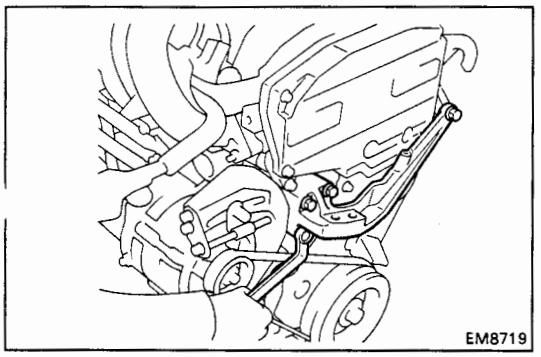

12. REMOVE RH ENGINE MOUNTING BRACKET

Remove the three bolts and mounting bracket.

HINT: Lower the jack and perform the operation with the engine fully up.

13. REMOVE EGR VACUUM MODULATOR AND VSV
(See step 22 on page EM-66)

14. REMOVE THROTTLE BODY
(See steps 5 to 8, 10 and 11 on pages FI-135 and 136)

15. REMOVE HOSE CLAMP AND VTV CLAMP OF AIR BY-PASS VALVE
(See steps 15 and 16 on page TC-9)

16. REMOVE CYLINDER HEAD COVER
(See step 35 on page EM-70)

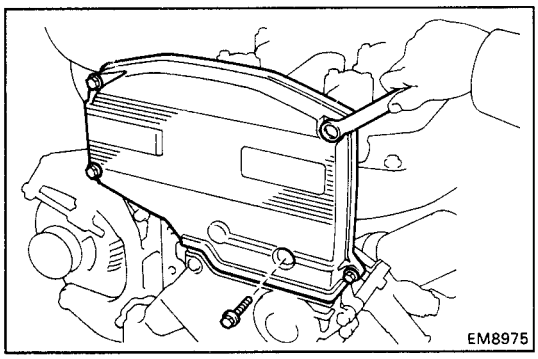

17. REMOVE SPARK PLUGS (See page IG-7)

18. REMOVE NO.2 TIMING BELT COVER

Remove the five screws, timing belt cover and gasket.

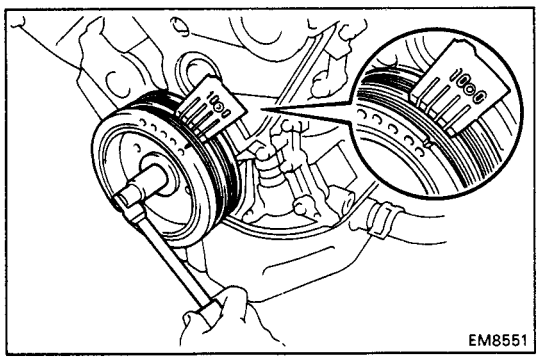

19. SET NO.1 CYLINDER TO TDC/COMPRESSION

(a) Turn the crankshaft pulley and align its groove with timing mark "0" of the No.1 timing belt cover.

NOTICE: Always turn the crankshaft clockwise.

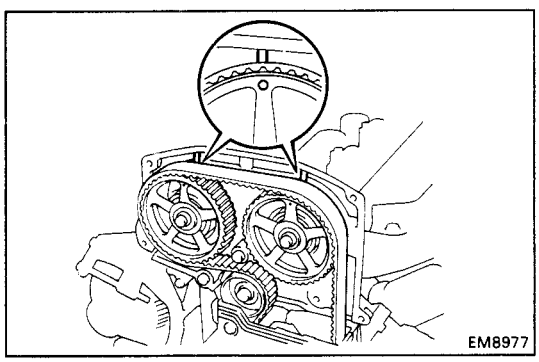

(b) Check that the timing marks of the camshaft timing pulleys are aligned with the timing marks of the No.3 timing belt cover.

If not, turn the crankshaft one revolution (360°).

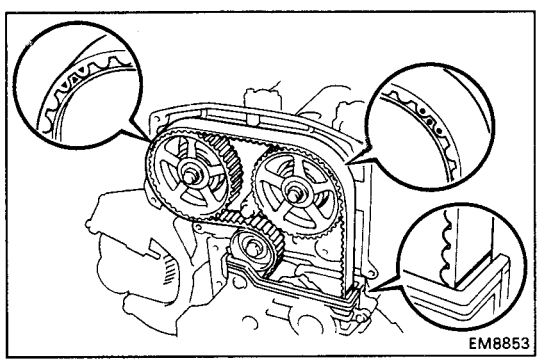

20. REMOVE TIMING BELT FROM CAMSHAFT TIMING PULLEYS

HINT:

- (Re-using timing belt)
  Place matchmarks on the timing belt and camshaft timing pulleys, and place a matchmark on the timing belt to match the end of the No1 timing belt cover.

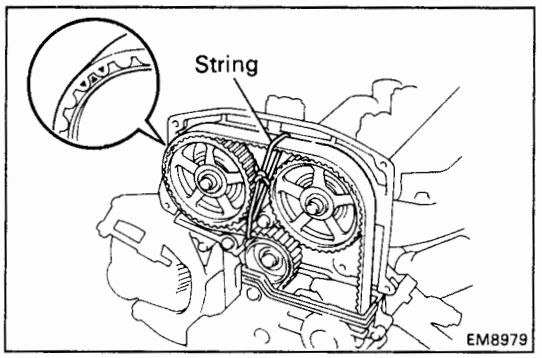

- (When replacing timing belt tensioner only)
  To avoid meshing of the timing belt and timing pulley, secure one with a string. And place the matchmarks on the timing belt and RH camshaft timing pulley.

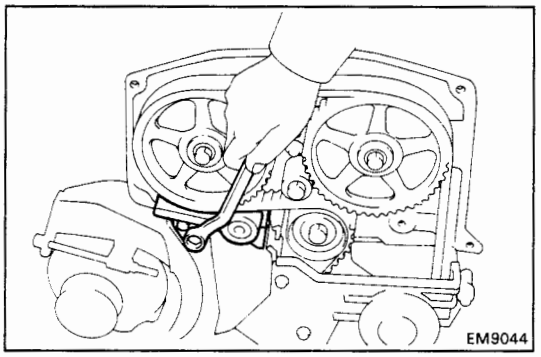

(a) Remove the two bolts and timing belt tensioner.

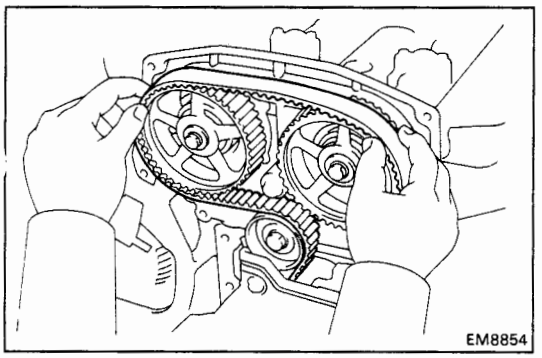

(b) Remove the timing belt from the camshaft timing pulley.

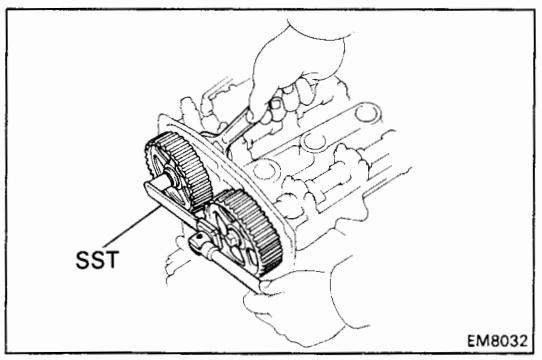

21. REMOVE CAMSHAFT TIMING PULLEYS

(a) Hold the hexagonal wrench head portion of the camshaft with a wrench, and remove the pulley mount bolts.

HINT (Intake camshaft timing pulley): Use SST.

SST 09249-63010

(b) Remove the camshaft pulleys and pins.

HINT: Arrange the intake and exhaust timing pulleys.

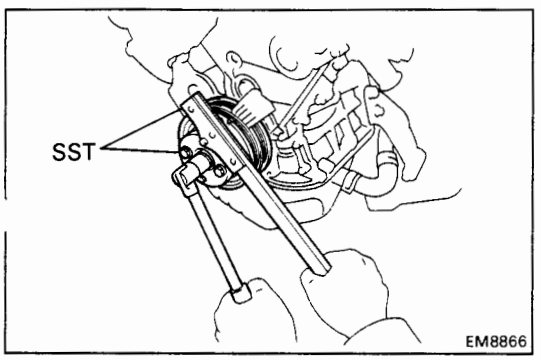

22. REMOVE CRANKSHAFT PULLEY

(a) Using SST, remove the pulley bolt.

SST 09213-54015 (90119-08216) and 09330-00021

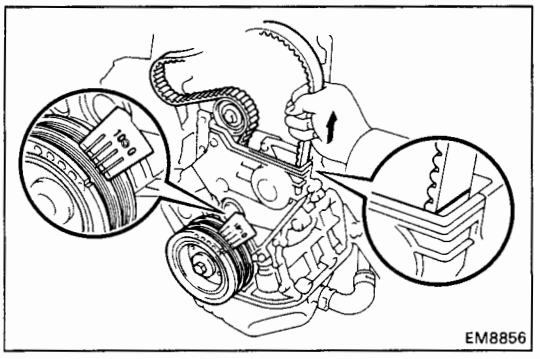

HINT (When re-using timing belt): After loosening the crankshaft pulley bolt, check that the timing belt matchmark aligns with the end of the No.1 timing belt cover when the crankshaft pulley groove is aligned with the timing mark "0" of the No.1 timing belt cover. If the matchmark does not align, align as follows:

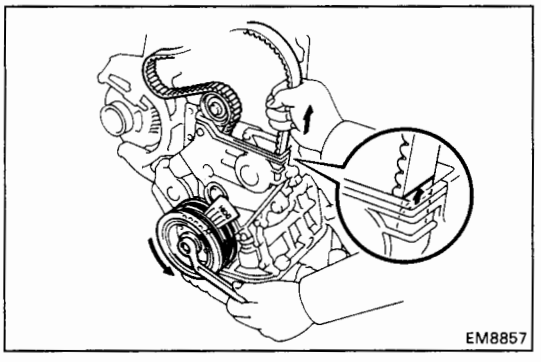

(When matchmark is out of alignment clockwise)

- Align the matchmark by pulling the timing belt up on the water pump pulley side while turning the crankshaft pulley counterclockwise.

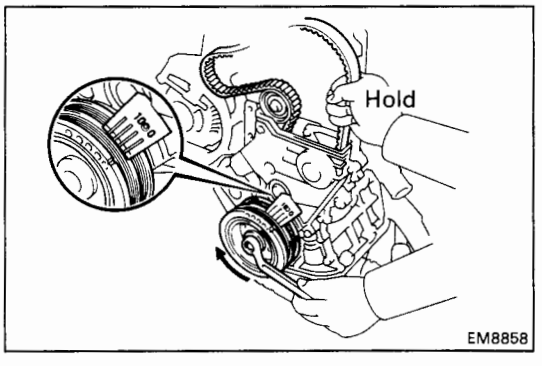

- After aligning the matchmark, hold the timing belt. And turn the crankshaft pulley clockwise, and align its groove with timing mark "0" of the No.1 timing belt cover.

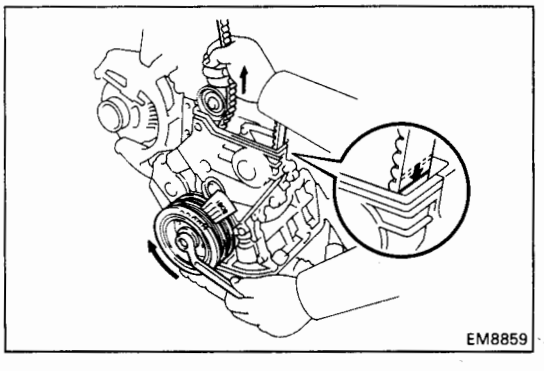

(When matchmark is out of alignment counterclockwise)

- Align the matchmark by pulling the timing belt up on the No.1 idler pulley side while turning the crankshaft pulley clockwise.

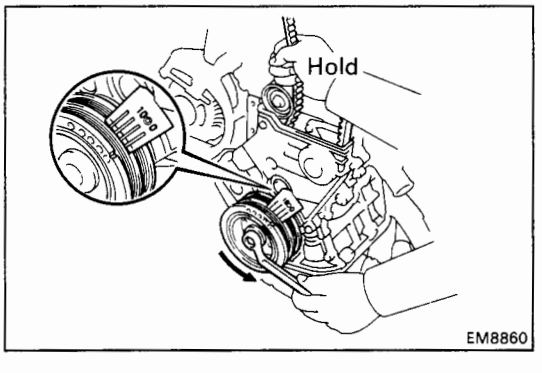

- After aligning the matchmark, hold the timing belt. And turn the crankshaft pulley counterclockwise, and align its groove with timing mark "0" of the No.1 timing belt cover.

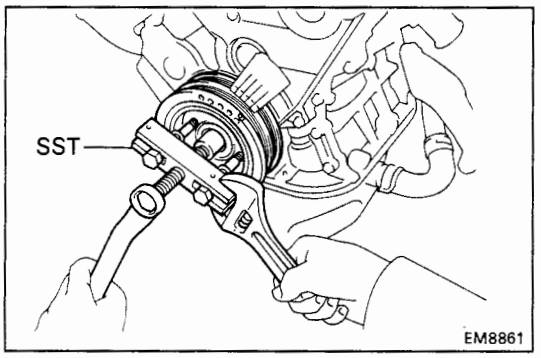

(b) Using SST, remove the pulley.

SST 09213-31021

HINT (When re-using timing belt): Remove the pulley without turning it.

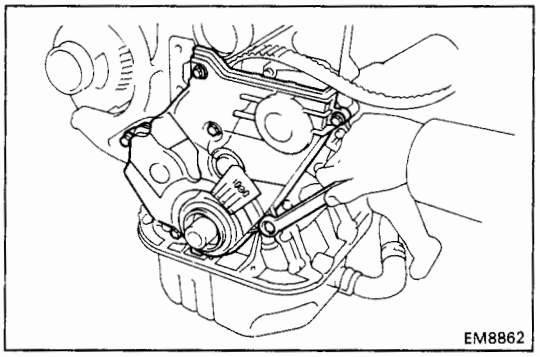

23. REMOVE NO.1 TIMING BELT COVER

Remove the six bolts, timing belt cover and gasket.

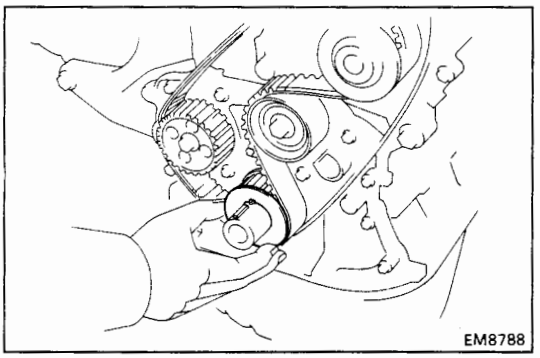

24. REMOVE TIMING BELT GUIDE

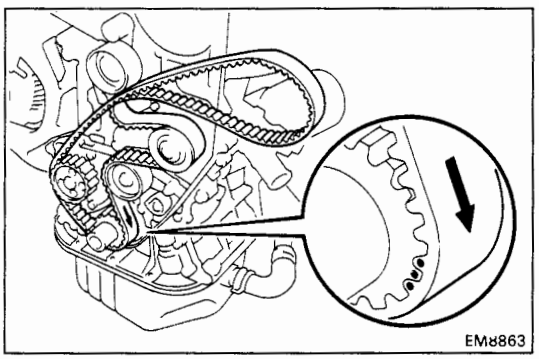

25. REMOVE TIMING BELT

HINT (When re-using timing belt): Draw a direction arrow on the timing belt (in the direction of engine revolution), and place matchmarks on the timing belt and crankshaft timing pulley.

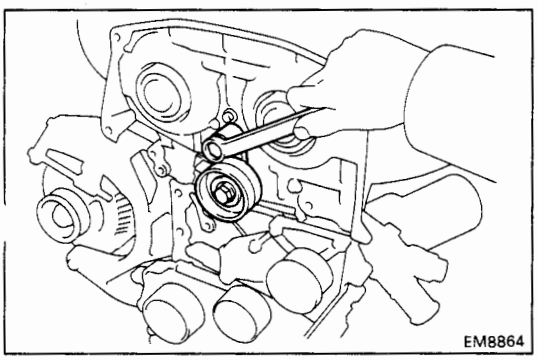

26. REMOVE NO.1 IDLER PULLEY

Remove the pivot bolt, pulley and plate washer.

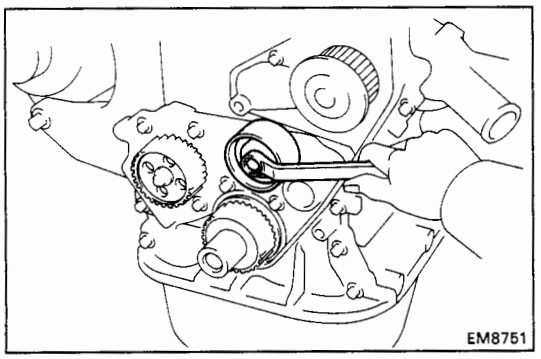

27. REMOVE NO.2 IDLER PULLEY

Remove the bolt and pulley.

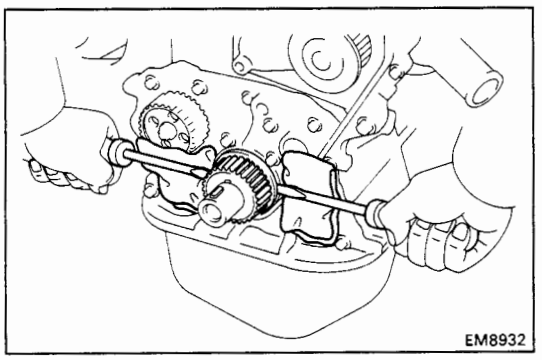

28. REMOVE CRANKSHAFT TIMING PULLEY

If the pulley cannot be removed by hand, use two screwdrivers.

HINT: Position shop rags as shown to prevent damage.

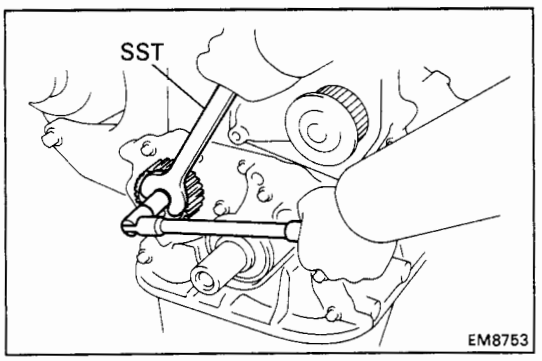

29. REMOVE OIL PUMP PULLEY

Using SST, remove the nut and pulley.

SST 09616-30011

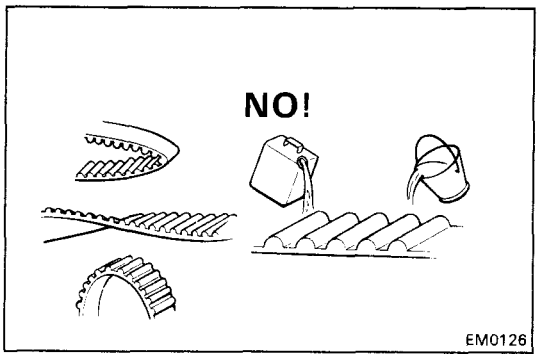

INSPECTION OF TIMING BELT COMPONENTS

1. INSPECT TIMING BELT

NOTICE:

- **Do not bend, twist or turn the timing belt inside out.**
- **Do not allow the timing belt to come into contact with oil, water or steam.**
- **Do not utilize timing belt tension when installing or removing the mount bolt of the camshaft timing pulley.**

If there are any defects as shown in the illustrations, check the following points:

(a) Premature parting

- Check for proper installation.
- Check the timing cover gasket for damage and proper installation.

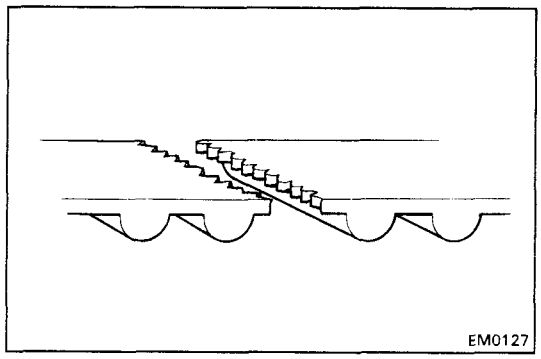

(b) If the belt teeth are cracked or damaged, check to see if either the camshaft or water pump is locked.

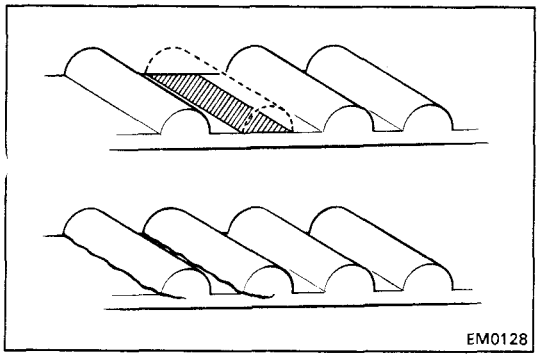

(c) If there is noticeable wear or cracks on the belt face, check to see if there are nicks on the side of the idler pulley lock.

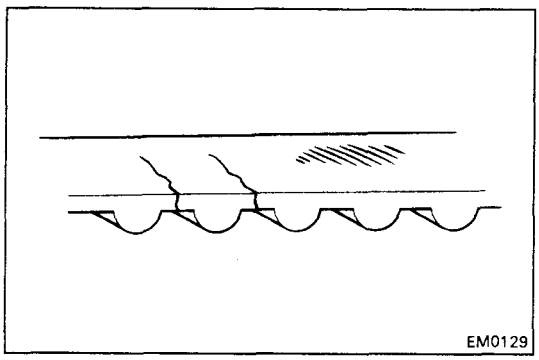

(d) If there is wear or damage on only one side of the belt, check the belt guide and the alignment of each pulley.

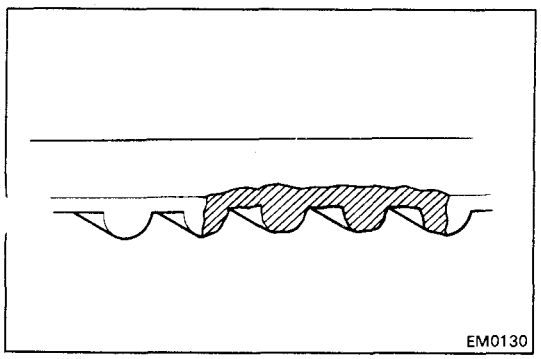

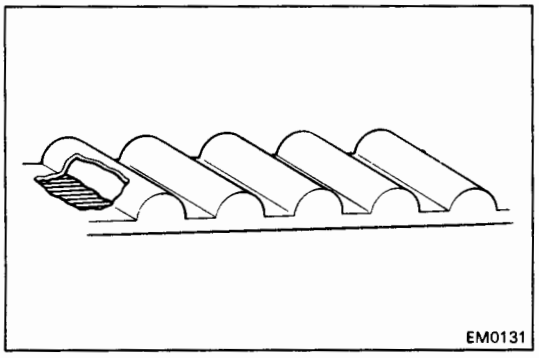

(e) If there is noticeable wear on the belt teeth, check the timing cover for damage, correct gasket installation and foreign material on the pulley teeth.

If necessary, replace the timing belt.

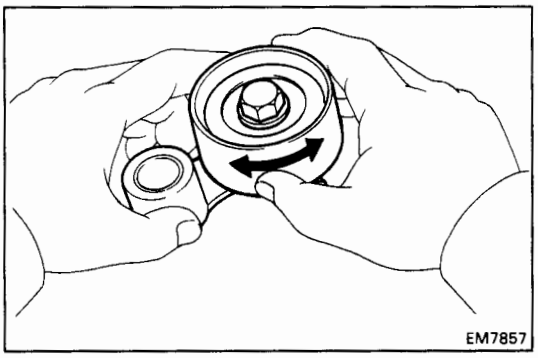

2. INSPECT IDLER PULLEYS

Check the turning smoothness of the idler pulley.

If necessary, replace the idler pulley.

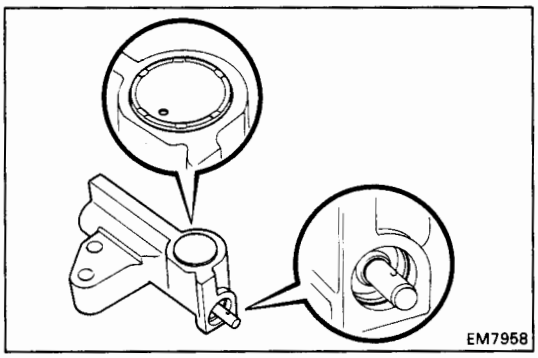

3. INSPECT TIMING BELT TENSIONER

(a) Visually check tensioner for oil leakage.

HINT: If there is only a small trace of oil on the seal of the push rod, the tensioner is all right.

If leakage is found, replace the tensioner.

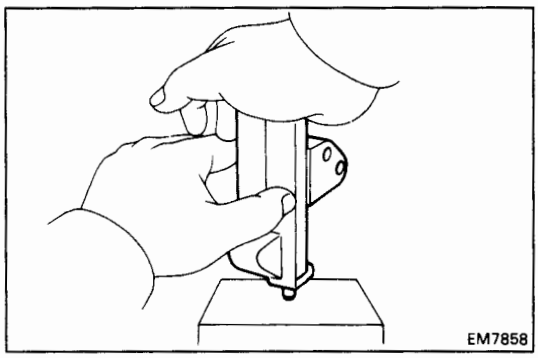

(b) Hold the tensioner with both hands, and push the push rod strongly againt the floor or wall to check that it doesn't move.

If the push rod moves, replace the tensioner.

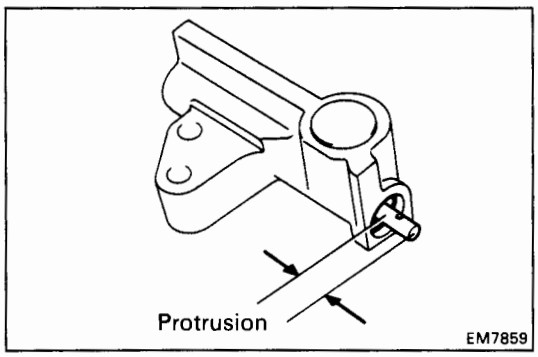

(c) Measure the protrusion of the push rod from the housing end.

Protrusion: 8.5 – 9.5 mm (0.335 – 0.374 in.)

If the protrusion is not as specified, replace the tensioner.

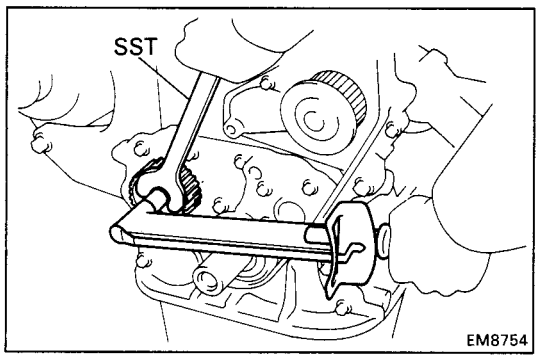

INSTALLATION OF TIMING BELT

(See page EM-26)

1. INSTALL OIL PUMP PULLEY

(a) Align the cutouts of the pulley and shaft, and slide the pulley.

(b) Using SST, install the nut.

SST 09616-30011

Torque: 355 kg-cm (26 ft-lb, 35 N·m)

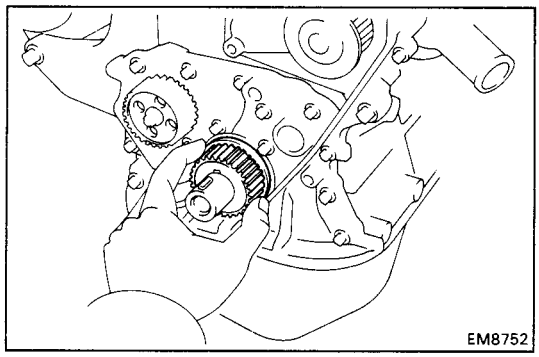

2. INSTALL CRANKSHAFT TIMING PULLEY

(a) Align the pulley set key with the key groove of the pulley.

(b) Slide on the timing pulley facing the flange side inward.

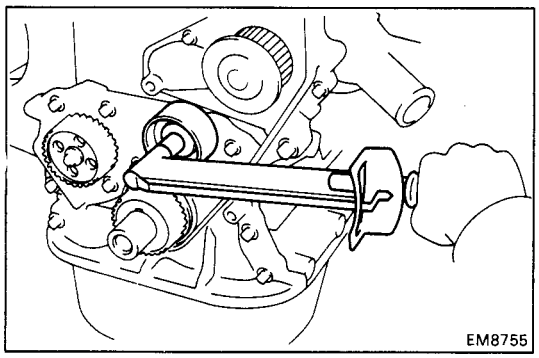

3. INSTALL NO.2 IDLER PULLEY

(a) Install the pulley with the bolt.

Torque: 440 kg-cm (32 ft-lb, 43 N·m)

(b) Check that the idler pulley moves smoothly.

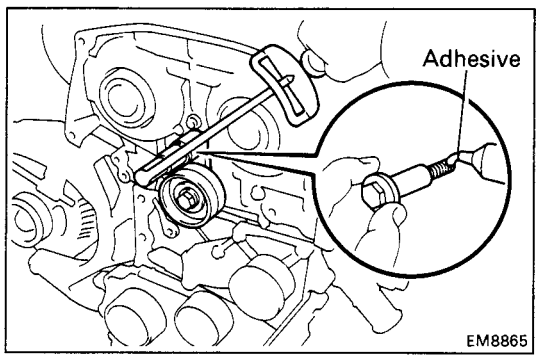

4. INSTALL NO.1 IDLER PULLEY

(a) Apply adhesive to two or three threads of the pivot bolt.

Adhesive: Part No. 08833-00080, THREE BOND 1344, LOCTITE 242 or equivalent

(b) Install the plate washer and pulley with the pivot bolt.

Torque: 440 kg-cm (32 ft-lb, 43 N·m)

(c) Check that the pulley bracket moves smoothly.

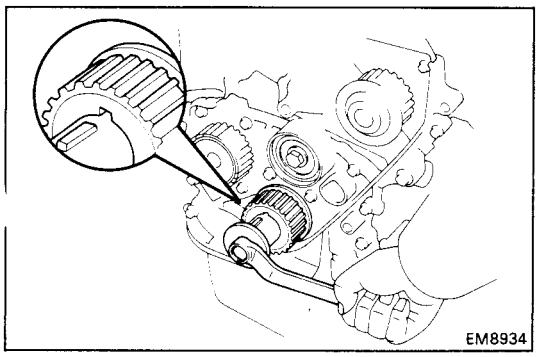

5. TEMPORARILY INSTALL TIMING BELT

NOTICE: The engine should be cold.

(a) Using the crankshaft pulley bolt, turn the crankshaft and position the key groove of the crankshaft timing pulley upward.

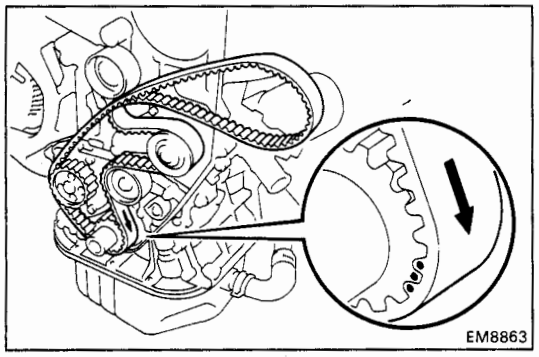

(b) Remove any oil or water on the crankshaft pulley, oil pump pulley, water pump pulley, No.1 idler pulley, No.2 idler pulley, and keep them clean.

(c) Install the timing belt on the crankshaft timing pulley, oil pump pulley, No.2 idler pulley, water pump pulley and No.1 idler pulley.

HINT (When re-using timing belt): Align the matchmarks of the camshaft timing pulley and timing belt, and install the belt with the arrow pointing in the direction of engine revolution.

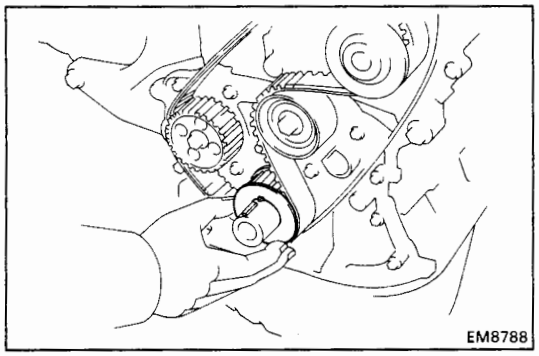

6. INSTALL TIMING BELT GUIDE

Install the guide, facing the cup side outward.

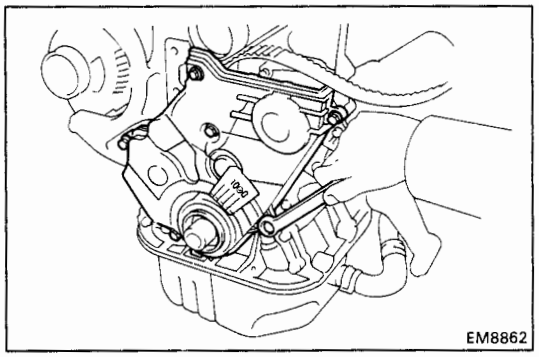

7. INSTALL NO.1 TIMING BELT COVER

(a) Install the gasket to the timing belt cover.

(b) Install the timing belt cover with the six bolts.

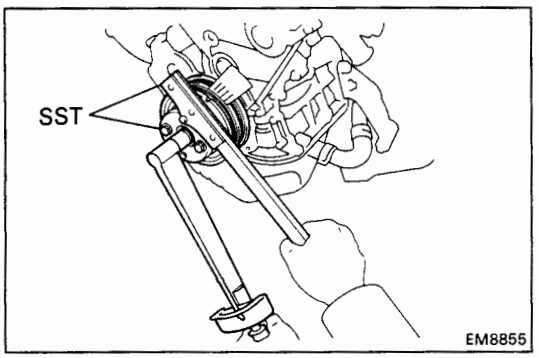

8. INSTALL CRANKSHAFT PULLEY

(a) Align the pulley set key with the key groove of the pulley, and slide on the pulley.

(b) Using SST, install and torque the bolt.

SST 09213-54015 (90119-08216) and 09330-00021

Torque: 1,100 kg-cm (80 ft-lb, 108 N·m)

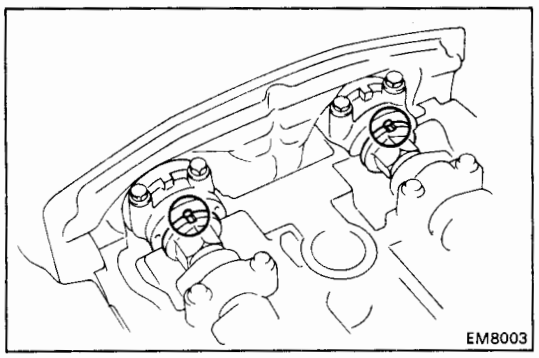

9. INSTALL CAMSHAFT TIMING PULLEYS

(a) Using a wrench, turn and align the groove of the camshaft with the drilled mark of the No.1 camshaft bearing cap.

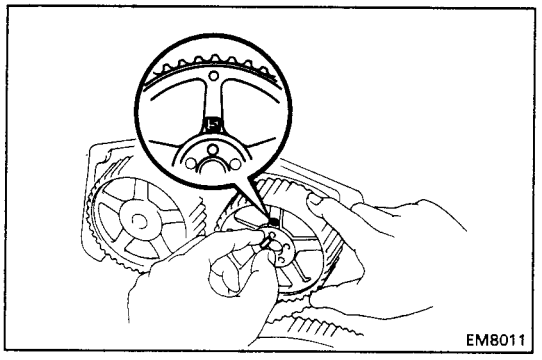

(b) Slide the timing pulley onto the camshaft, facing mark "S" upward.

(c) Align the pin holes of the camshaft and timing pulley, insert the knock pin.

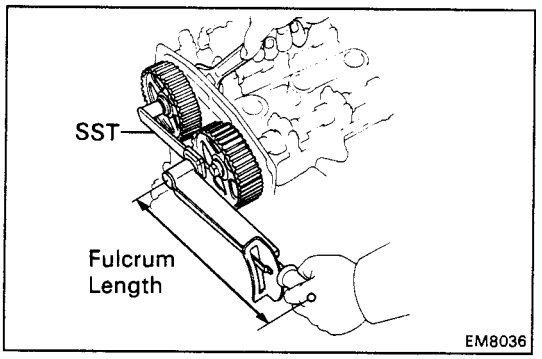

(d) Hold the hexagonal wrench head portion of the camshaft with a wrench, and tighten the bolts.

Torque: 600 kg-cm (43 ft-lb, 59 N·m)
420 kg-cm (30 ft-lb, 41 N·m) for SST

HINT (Intake camshaft timing pulley):
- Use SST.

SST 09249-63010

- Use a torque wrench with a fulcrum length of 340 mm (13.39 in.).

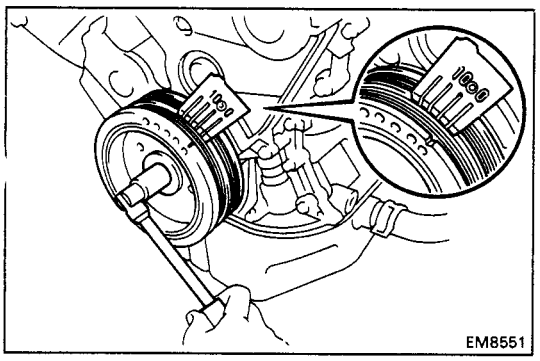

10. SET NO.1 CYLINDER TO TDC/COMPRESSION

(a) Turn the crankshaft pulley, and align its groove with timing mark "0" of the No.1 timing belt cover.

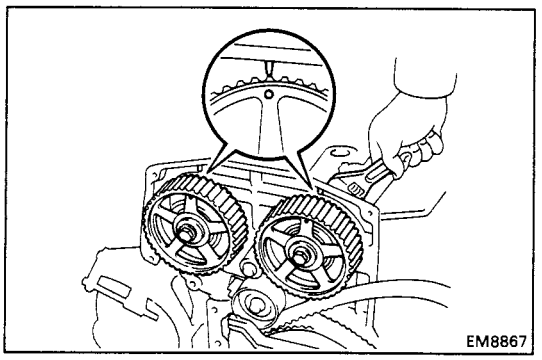

(b) Turn the camshaft, and align the timing marks of the camshaft timing pulleys and No.3 timing belt cover.

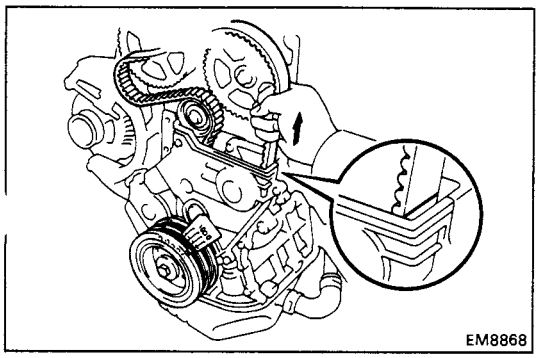

11. INSTALL TIMING BELT

HINT (When re-using timing belt):
- Check that the matchmark on the timing belt matches the end of the No.1 timing belt cover.

If the matchmark does not align, shift the meshing of the timing belt and crankshaft timing pulley until they align. (See page EM-23)

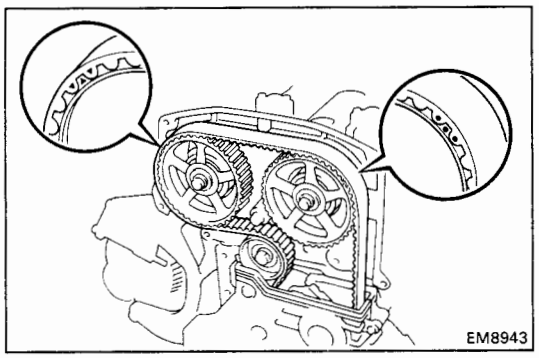

- Align the matchmarks of the timing belt and camshaft timing pulleys.

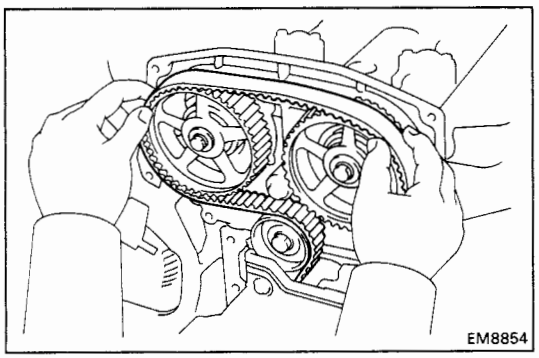

(a) Remove any oil or water on the camshaft timing pulley, and keep it clean.

(b) Install the timing belt, insure that there is tension between the crankshaft timing pulley and intake camshaft timing pulley.

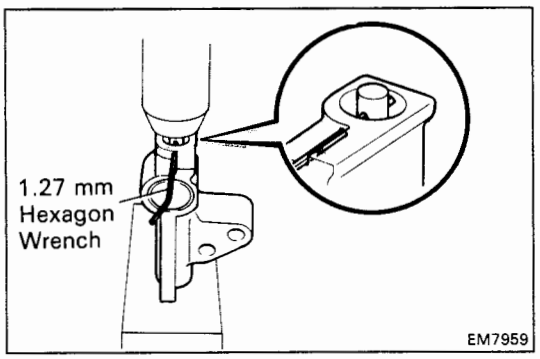

12. SET TIMING BELT TENSIONER

(a) Using a press, slowly press in the push rod using 100 – 1,000 kg (220 – 2,205 lb, 981 – 9,807 N) of pressure.

(b) Align the holes of the push rod and housing, pass a 1.27 mm hexagon wrench through the holes to keep the setting position of the push rod.

(c) Release the press.

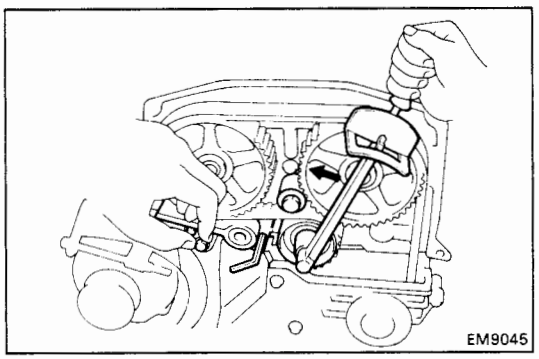

13. INSTALL TIMING BELT TENSIONER

(a) Turn the No.1 idler pulley bolt counterclockwise obtain the specified torque toward the left as far as No.1 idler pulley will go, and temporarily install the tensioner with the two bolts.

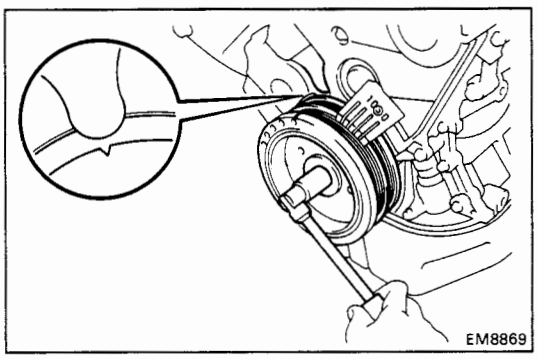

(b) Slowly turn the crankshaft pulley 5/6 revolution, and align its groove with the ATDC 60° mark of the No.1 timing belt cover.

NOTICE: Always turn the crankshaft clockwise.

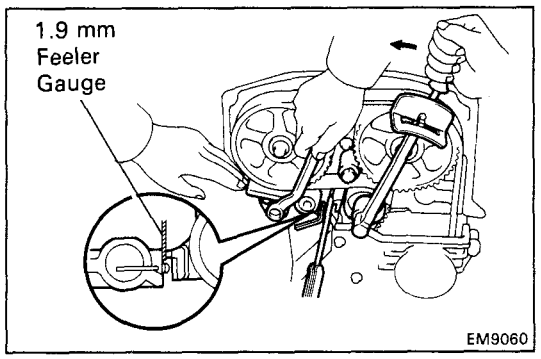

(c) Insert a 1.90 mm (0.075 in.) feeler gauge between the tensioner body and No.1 idler pulley stopper.

(d) Turn the No.1 idler pulley bolt counterclockwise to obtain the specified torque.

Torque: 180 kg-cm (13 ft-lb, 18 N·m)

NOTICE: To apply the correct torque, apply the torque wrench along the axis through the bolts of the No.1 idler pulley and exhaust camshaft timing pulley.

(e) While pushing the tensioner, alternately tighten the two bolts.

Torque: 210 kg-cm (15 ft-lb, 21 N·m)

(f) Remove the 1.27 mm hexagon wrench from the tensioner.

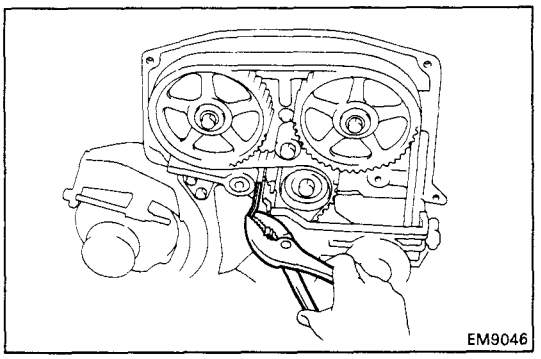

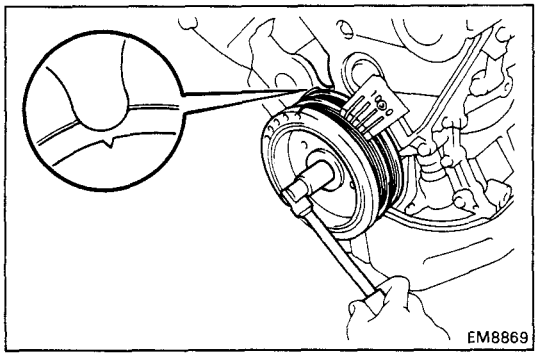

(g) Slowly turn the crankshaft pulley one revolution, and align its groove with the ATDC 60° mark of the No.1 timing belt cover.

NOTICE: Always turn the crankshaft clockwise.

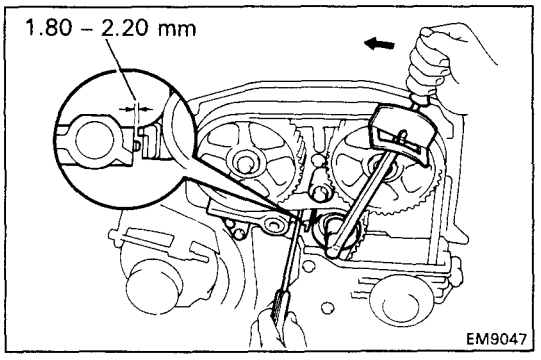

(h) Turn the No.1 idler pulley bolt counterclockwise to obtain the specified torque.

Torque: 180 kg-cm (13 ft-lb, 18 N·m)

NOTICE: To apply the correct torque, apply the torque wrench along the axis through the bolts of the No.1 idler pulley and exhaust camshaft timing pulley.

(i) Using a feeler gauge, check the specified clearance between the tensioner body and No.1 idler pulley stopper.

Clearance: 1.80 – 2.20 mm (0.071 – 0.087 in.)

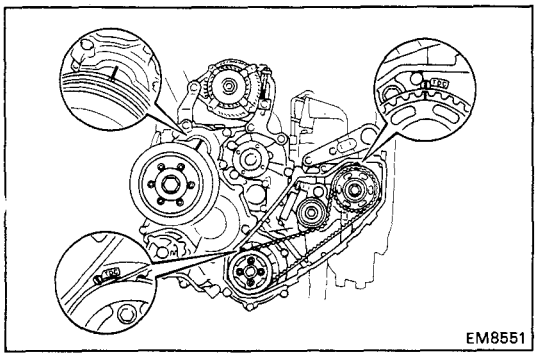

14. CHECK VALVE TIMING

(a) Slowly turn the crankshaft pulley two revolutions from TDC to TDC.

NOTICE: Always turn the crankshaft clockwise.

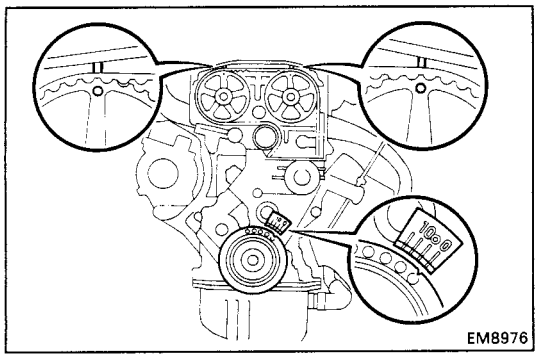

(b) Check that each pulley aligns with the timing marks as shown in the figure.

If the marks do not align, remove the timing belt and reinstall it.

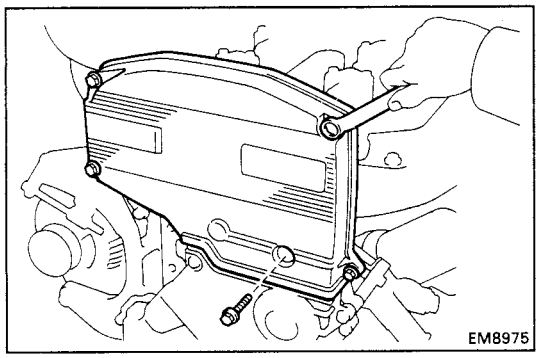

15. INSTALL NO.2 TIMING BELT COVER

(a) Install the gasket to the timing belt cover.

(b) Install the belt cover with the five bolts.

16. INSTALL SPARK PLUGS (See page IG-8)

Torque: 180 kg-cm (13 ft-lb, 18 N·m)

17. INSTALL HOSE CLAMP AND VTV CLAMP OF AIR BY-PASS VALVE
(See steps 13 and 14 on pages TC-19)

18. INSTALL CYLINDER HEAD COVER
(See step 7 on page EM-88)

19. INSTALL THROTTLE BODY
(See steps 2, 3 and 5 to 8 on pages FI-138 and 139)

20. INSTALL EGR VACUUM MODULATOR AND VSV
(See step 20 on page EM-92)

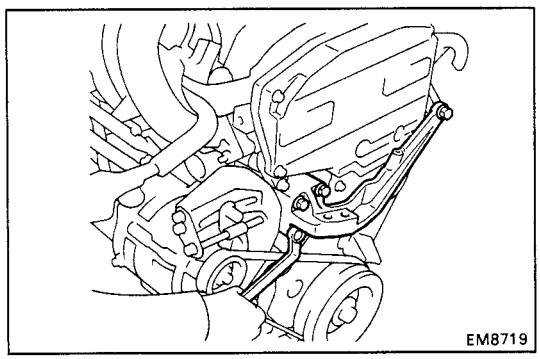

21. INSTALL RH ENGINE MOUNTING BRACKET

Install the mounting bracket with the three bolts.

Torque: 530 kg-cm (38 ft-lb, 52 N·m)

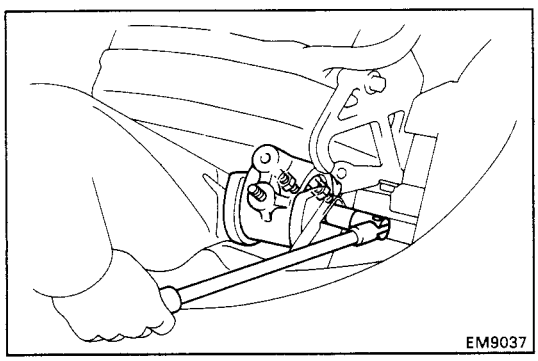

22. INSTALL RH ENGINE MOUNTING INSULATOR

Install the mounting insulator with the through bolt and two nuts.

Torque:

Nut	**530 kg-cm (38 ft-lb, 52 N·m)**
Through bolt	**800 kg-cm (58 ft-lb, 78 N·m)**

HINT: Lower the jack and perform the operation with the engine fully up.

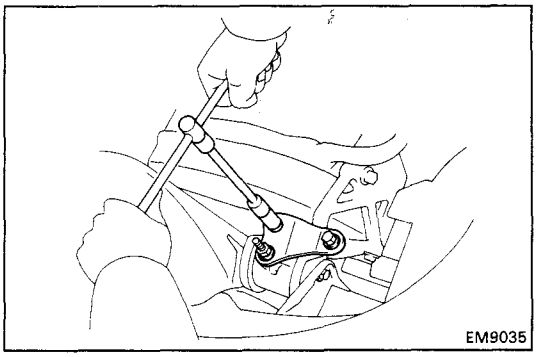

23. INSTALL RH ENGINE MOUNTING STAY

Install the mounting stay with the two bolts and nut.

Torque: 740 kg-cm (54 ft-lb, 73 N·m)

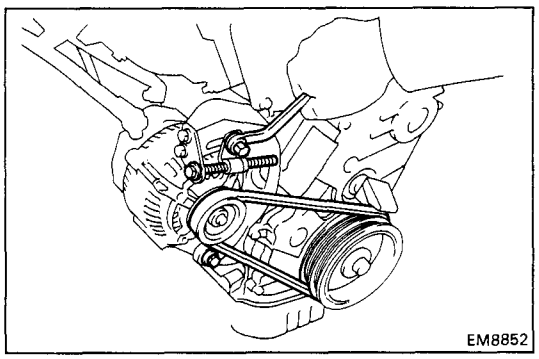

24. INSTALL ALTERNATOR DRIVE BELT

Install the drive belt with the adjusting bolt, lock bolt and pivot bolt.

25. INSTALL RH FRONT WHEEL

26. INSTALL INTERCOOLER
(See steps 2 to 8, 10 and 11 on pages TC-23 to 25)

27. INSTALL CRUISE CONTROL ACTUATOR (w/ CRUISE CONTROL SYSTEM) AND ACCELERATOR LINKAGE
(See step 36 pages EM-178)

28. INSTALL SUSPENSION UPPER BRACE
(See step 41 pages EM-179)

29. INSTALL RH ENGINE HOOD SIDE PANEL

30. INSTALL ENGINE UNDER COVERS

31. CONNECT CABLE TO NEGATIVE TERMINAL OF BATTERY

32. CHECK AND ADJUST DRIVE BELTS

(a) Adjust the alternator drive belt.
(See page CH-3)

Drive belt tension: New belt 120 ± 20 lb
Used belt 104 ± 20 lb

(b) Adjust the A/C drive belt.

Drive belt tension: New belt 160 ± 20 lb
Used belt 100 ± 20 lb

ADJUSTMENT OF VALVE TIMING

1. **REMOVE NO.2 TIMING BELT COVER**
   (See steps 1 to 6 and 9 to 12 on pages EM-26 to 28)

2. **REMOVE SPARK PLUGS (See page IG-7)**

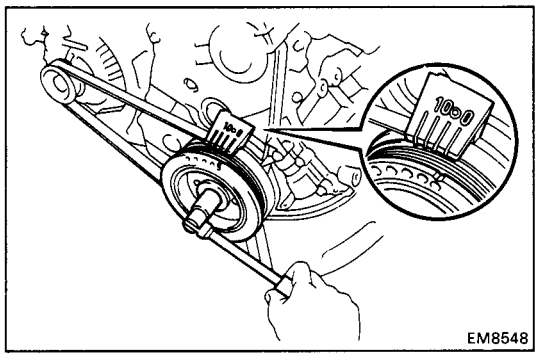

3. **CHECK CAMSHAFT TIMING PULLEY MARKS**
   (a) Turn the crankshaft pulley, and align its groove with timing mark "0" of the No.1 timing belt cover.

   NOTICE: Always turn the crankshaft clockwise.

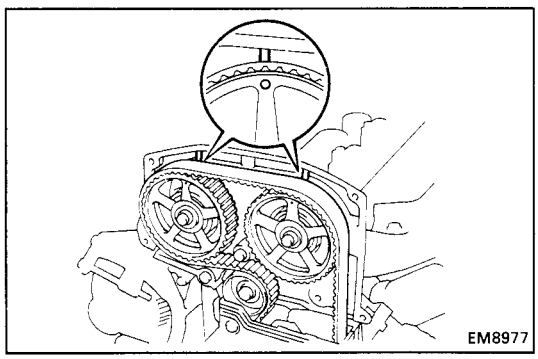

   (b) Check that the timing marks of the camshaft timing pulleys are aligned with the timing mark of the No.3 timing belt cover.

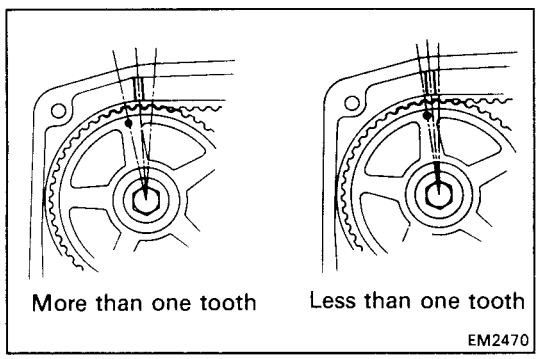

- If there is more than one timing pulley tooth between the timing marks, realign the timing marks in accordance with step 8.
- If the timing marks are aligned or the difference is less than one timing pulley tooth, proceed to step 9.

4. **REMOVE EGR VACUUM MODULATOR AND VSV**
   (See step 22 on page EM-66)

5. **REMOVE THROTTLE BODY**
   (See steps 5 to 8 and 9 to 11 on pages FI-135 and 136)

6. **REMOVE HOSE CLAMP AND VTV CLAMP OF AIR BY-PASS VALVE**
   (See steps 15 and 16 on page TC-9)

7. **REMOVE CYLINDER HEAD COVER**
   (See step 35 on page EM-70)

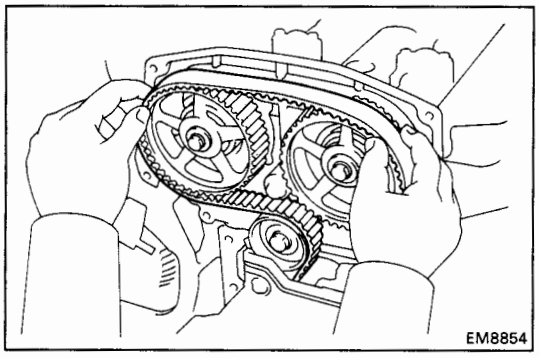

8. ADJUST CAMSHAFT TIMING PULLEY TIMING MARKS

(a) Remove the two bolts and timing belt tensioner.

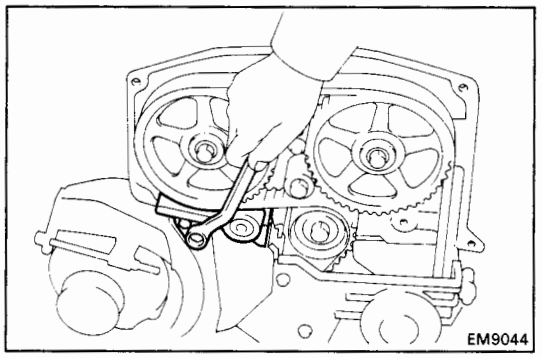

(b) Remove the timing belt from the camshaft timing pulleys.

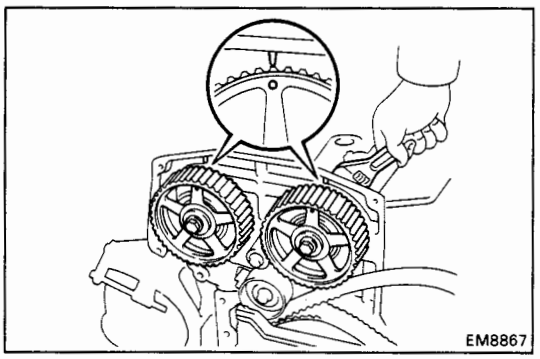

(c) Rotate the camshaft with a wrench and align the alignment marks of the camshaft timing pulley and No.3 timimg belt cover.

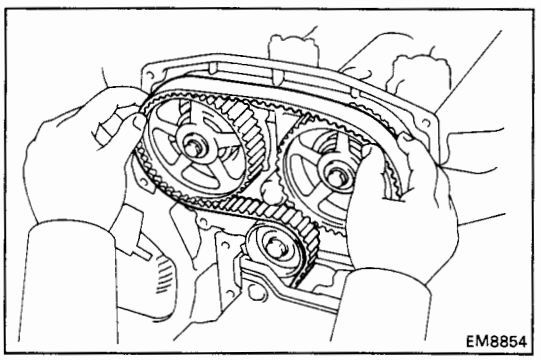

(d) Reinstall the timing belt, insure that there is tension between the crankshaft timing pulley and intake camshaft timing pulley.

NOTICE: Install the timing belt when the engine is cold.

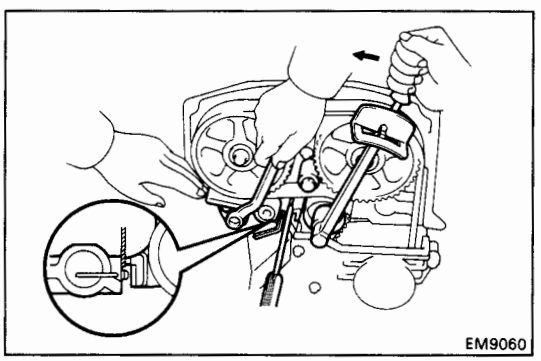

(e) Install the timing belt tensioner with the two bolts. (See steps 12 and 13 on pages EM-38 and 39)

Torque: 210 kg-cm (15 ft-lb, 21 N·m)

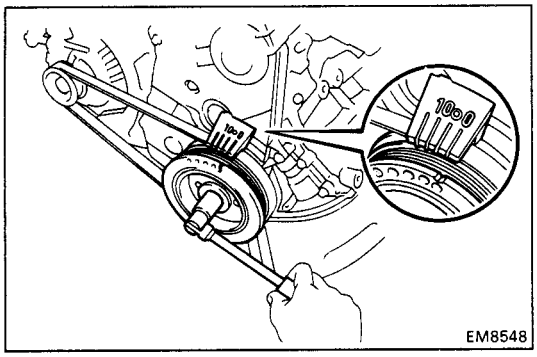

(f) Turn the crankshaft pulley two revolutions from TDC to TDC.

NOTICE: Always turn the crankshaft clockwise.

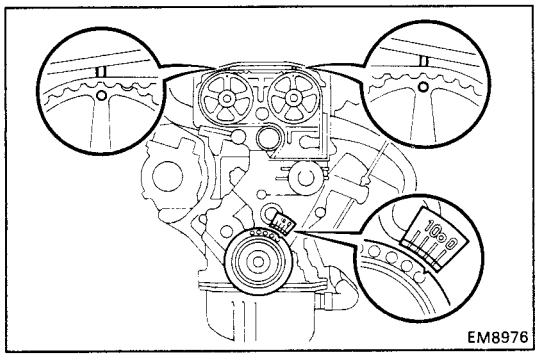

(g) Check that each pulley aligns with the timing marks as shown in the figure.

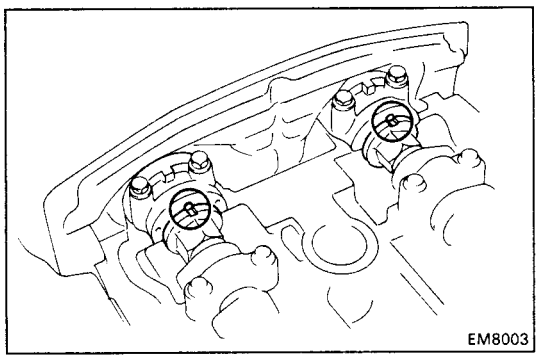

9. CHECK VALVE TIMING

(a) Using a wrench, turn and align the groove of the camshaft with the drilled mark of the No.1 camshaft bearing cap.

NOTICE: Always turn the crankshaft clockwise.

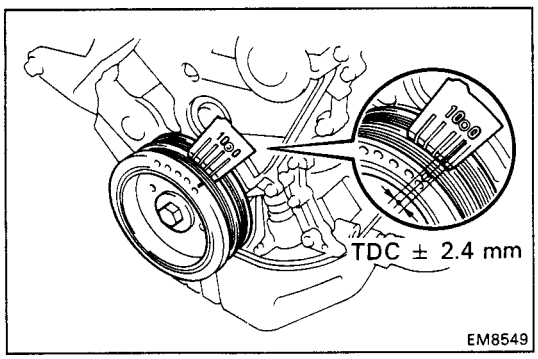

(b) Next make a note of the crankshaft pulley angle on the No.1 timing belt cover.

HINT: Perform this check separately for the intake and exhaust sides.

If the crankshaft pulley movement is within ± 2.4 mm (0.094 in.) of TDC, it is correct.

If it is greater than 2.4 mm (0.094 in.), go back to step 8.

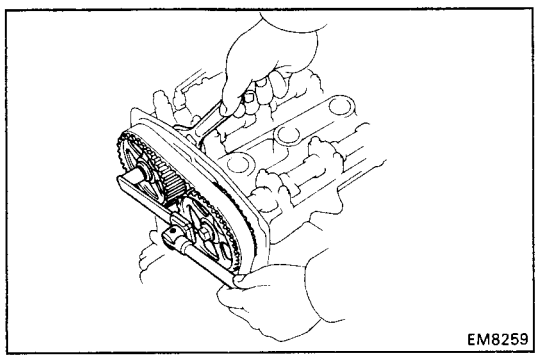

10. ADJUST VALVE TIMING

(a) Hold the hexagonal wrench head portion of the camshaft with a wrench, and remove the two camshaft timing pulley bolts.

HINT (Intake camshaft timing pulley): Use SST.

SST 09249-63010

NOTICE: Do not make use of the timing belt tension when loosening the pulley bolts.

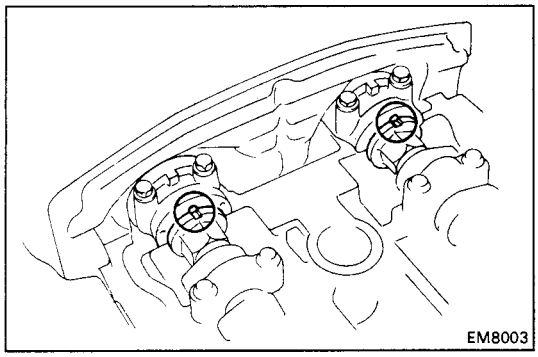

(b) Check that the camshaft grooves are aligned with the drilled mark of the No.1 camshaft bearing cap.

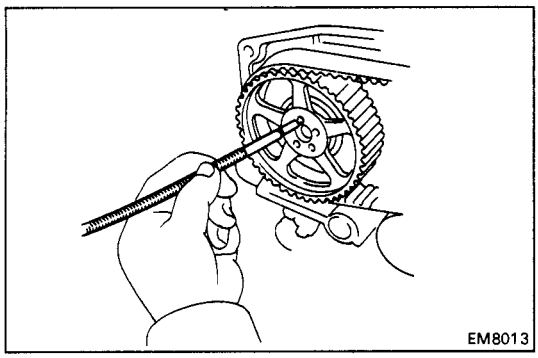

(c) Using a magnetic finger, remove the knock pin from the pin hole of the camshaft timing pulley.

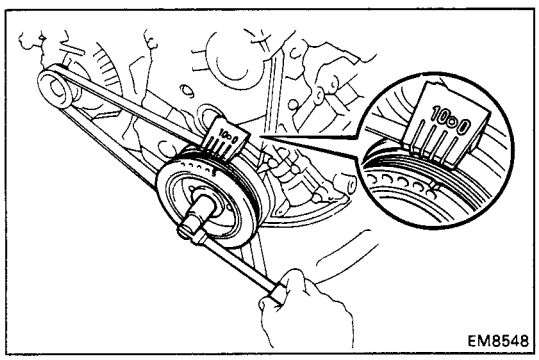

(d) Turn the crankshaft pulley, and align its groove with timing mark "0" of the No.1 timing belt cover.

NOTICE: Always turn the crankshaft clockwise.

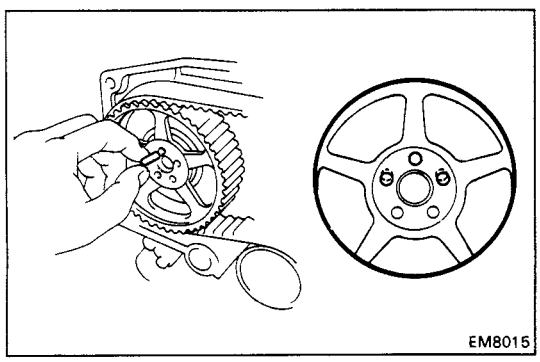

(e) Select one overlapped hole of the camshaft and timing pulley, and insert the match pin into it.

HINT:
- If there is no overlapped hole, rotate the crankshaft a little and insert the pin into the nearly overlapped hole.
- By changing the pin hole to the next one, the crankshaft pulley angle can be adjusted by approx. 2°.
- By changing the pin hole to the next two, the crankshaft pulley angle can be adjusted by approx. 5°.

(f) Hold the hexagonal wrench head portion of the camshaft with a wrench, and install the pulley bolt.

Torque: 600 kg-cm (43 ft-lb, 59 N·m)
420 kg-cm (30 ft-lb, 41 N·m) for SST

HINT (Intake camshaft timing pulley):
- Use SST.

SST 09249-63010

- Use a torque wrench with a fulcrum length of 340 mm (13.39 in.).

NOTICE: Do not make use of the timing belt tension when tightening the bolt.

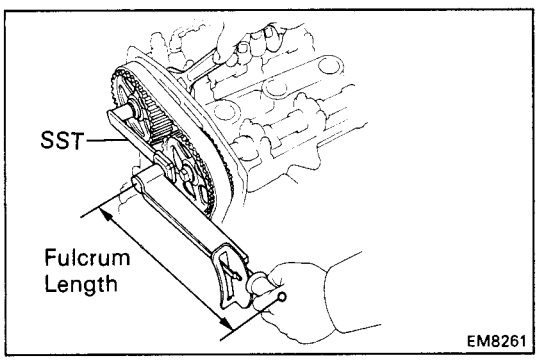

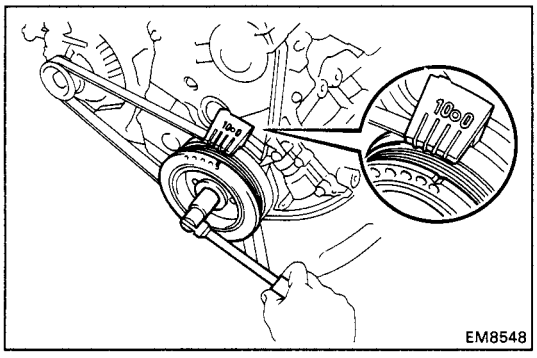

(g) Turn the crankshaft clockwise two revolutions from TDC to TDC.

(h) Recheck the valve timing.
(See step 9 on page EM-44)

11. REINSTALL CYLINDER HEAD COVER
(See step 7 on pages EM-88)

12. REINSTALL HOSE CLAMP AND VTV CLAMP OF AIR BY-PASS VALVE
(See steps 13 and 14 on page TC-19)

13. REINSTALL THROTTLE BODY
(See steps 2, 3 and 5 to 8 on pages FI-138 and 139)

14. REINSTALL EGR VACUUM MODULATOR AND VSV
(See step 20 on page EM-92)

15. REINSTALL SPARK PLUGS (See page IG-8)
Torque: 180 kg-cm (13 ft-lb, 18 N·m)

16. REINSTALL NO.2 TIMING BELT COVER
(See steps 15, 21 to 23 and 26 to 30 pages EM-40 and 41)

TIMING BELT (5S-FE)

COMPONENTS

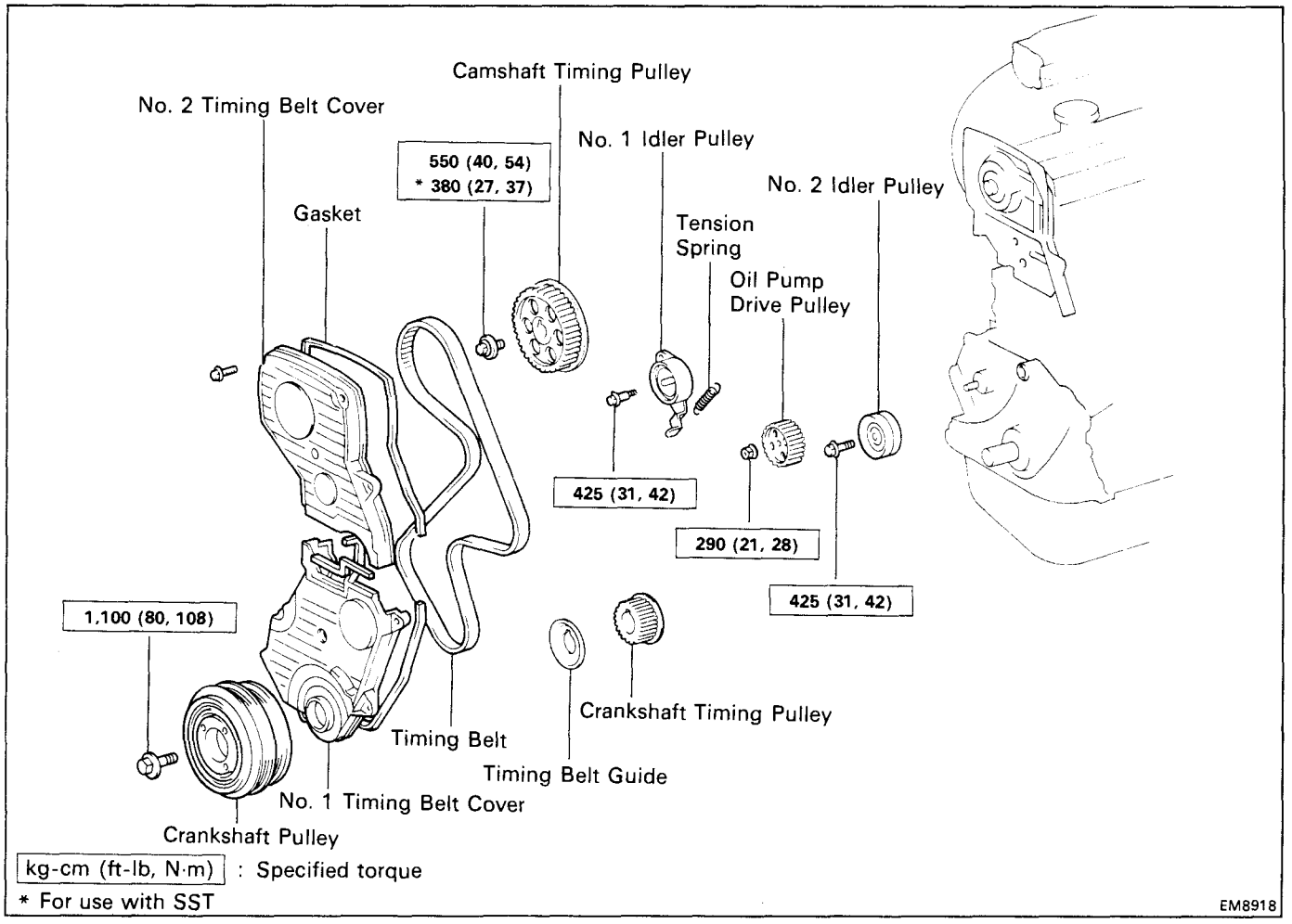

REMOVAL OF TIMING BELT

1. **DISCONNECT CABLE FROM NEGATIVE TERMINAL OF BATTERY**

   CAUTION: Work must be started after approx. 20 seconds or longer from the time the ignition switch is turned to the "LOCK" position and the negative (–) terminal cable is disconnected from the battery.

2. **REMOVE ENGINE UNDER COVERS**

3. **REMOVE RH ENGINE HOOD SIDE PANEL**

4. **REMOVE SUSPENSION UPPER BRACE**
   (See steps 8 on page EM-182)

5. **REMOVE CRUISE CONTROL ACTUATOR (w/ CRUISE CONTROL SYSTEM) AND ACCELERATOR LINKAGE**
   (See step 11 on page EM-182)

6. **REMOVE RH FRONT WHEEL**

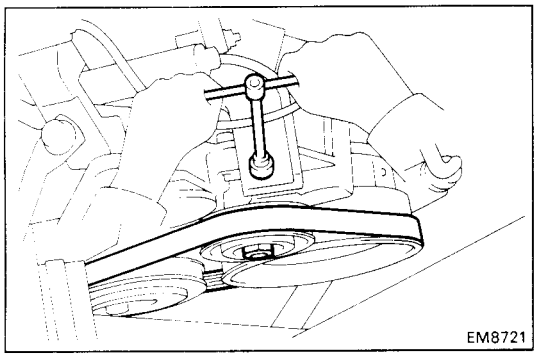

7. REMOVE A/C DRIVE BELT

Loosen the idler pulley bolt and adjusting bolt, and remove the drive belt.

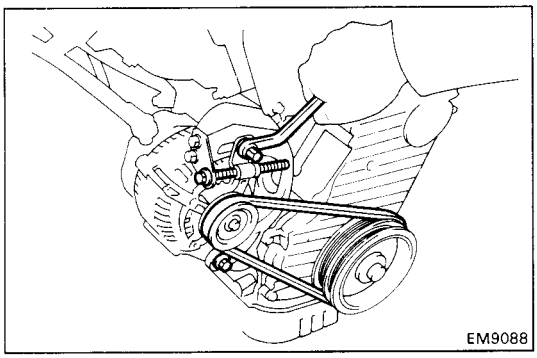

8. REMOVE ALTERNATOR DRIVE BELT

Loosen the pivot bolt, adjusting lock bolt and adjusting bolt, and remove the drive belt.

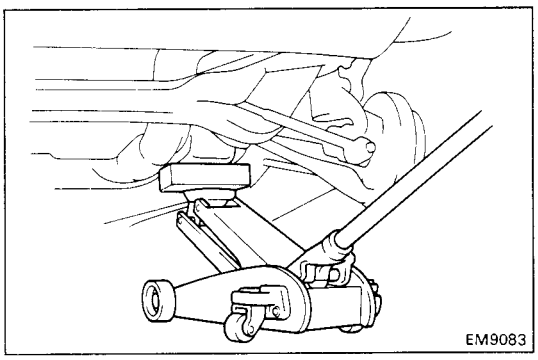

9. SLIGHTLY JACK UP ENGINE

Raise the engine enough to remove the weight from the engine mounting on the right side.

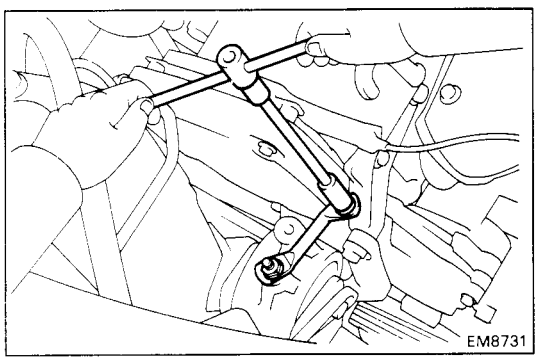

10. REMOVE RH ENGINE MOUNTING STAY

Remove the bolt, nut and mounting stay.

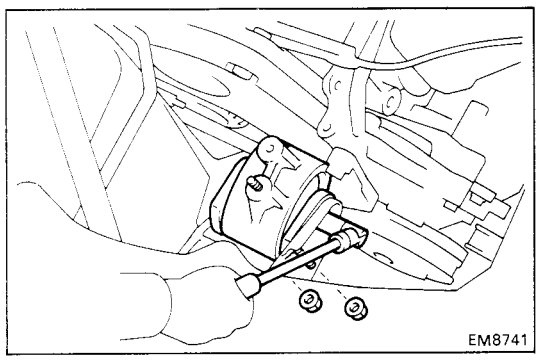

11. REMOVE RH ENGINE MOUNTING INSULATOR

Remove the through bolt, two nuts and mounting insulator.

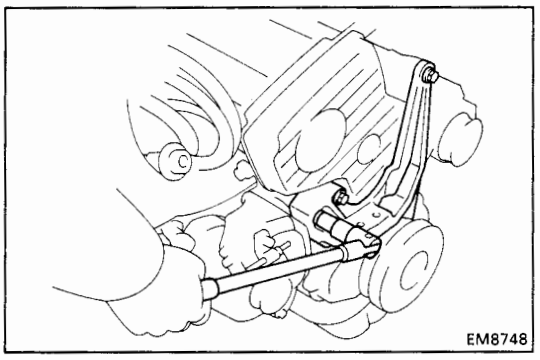

12. REMOVE RH ENGINE MOUNTING BRACKET

Remove the three bolts and mounting bracket.

HINT: Lower the jack and perform the operation with the engine fully up.

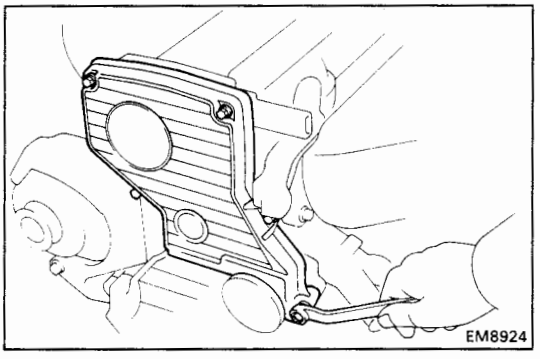

13. REMOVE NO.2 TIMING BELT COVER

Remove the five bolts, timing belt cover and two gaskets.

14. REMOVE SPARK PLUGS (See page IG-11)

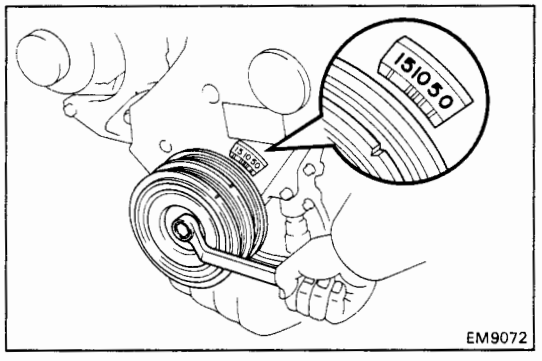

15. SET NO.1 CYLINDER TO TDC/COMPRESSION

(a) Turn the crankshaft pulley and align its groove with timing mark "0" of the No.1 timing belt cover.

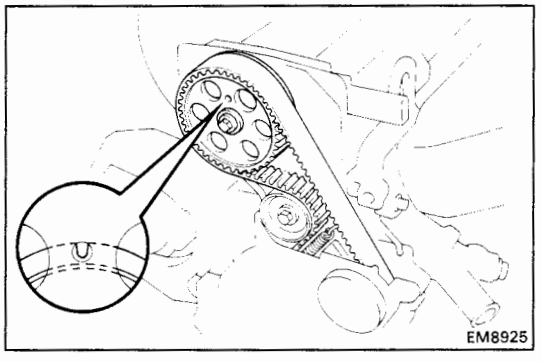

(b) Check that the hole of the camshaft timing pulley is aligned with the timing mark of the bearing cap.

If not, turn the crankshaft one revolution (360°).

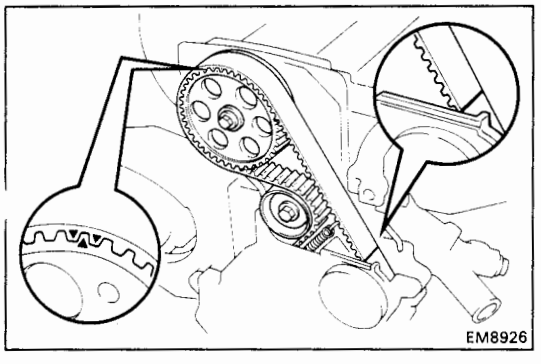

16. REMOVE TIMING BELT FROM CAMSHAFT TIMING PULLEY

HINT (When re-using timing belt): Place the matchmarks on the timing belt and camshaft timing pulley, and place matchmark on the timing belt to match the end of the No.1 timing belt cover.

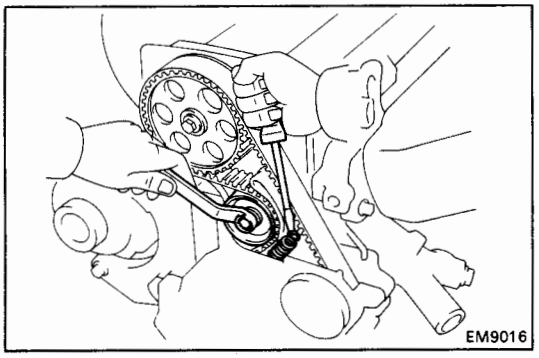

(a) Loosen the mount bolt of the No.1 idler pulley and shift the pulley toward the left as far as it will go, temporarily tighten it.

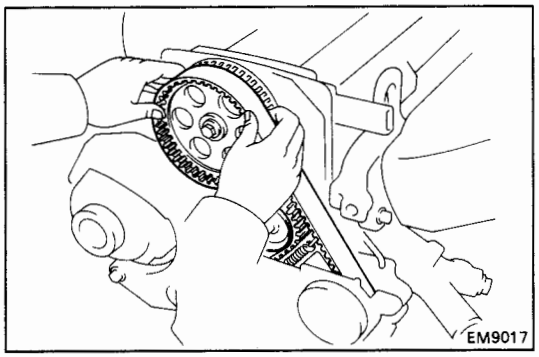

(b) Remove the timing belt from the camshaft timing pulley.

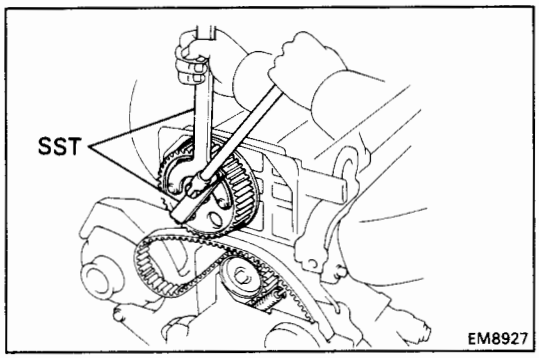

17. REMOVE CAMSHAFT TIMING PULLEY

Using SST, remove the bolt, plate washer and timing pulley.

SST 09249-63010 and 09278-54012

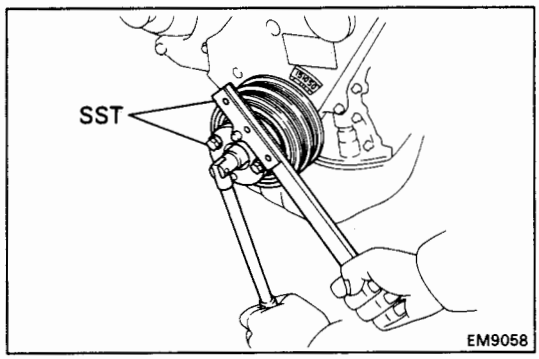

18. REMOVE CRANKSHAFT PULLEY

(a) Using SST, remove the pulley bolt.

SST 09213-54015 (09214-00030) and 09330-00021

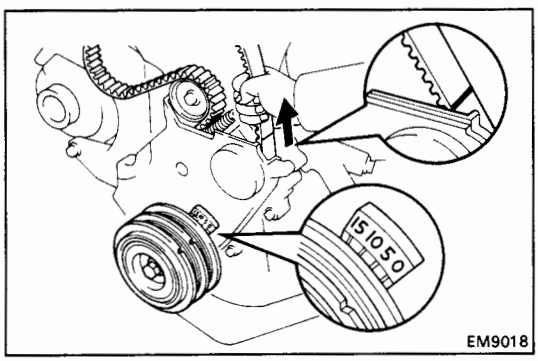

HINT (When re-using timing belt): After loosening the crankshaft pulley bolt, check that the timing belt matchmark aligns with the end of the No.1 timing belt cover when the crankshaft pulley groove is aligned with the timing mark "0" of the No.1 timing belt cover. If the matchmark does not align, align as follows:

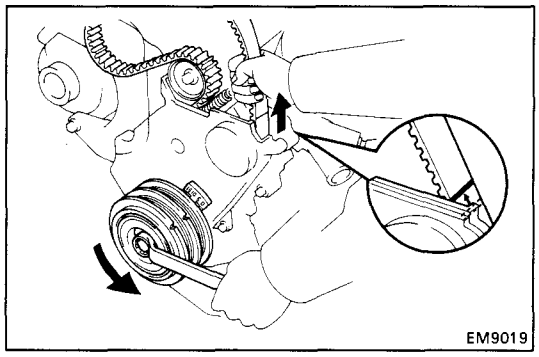

(When matchmark is out of alignment clockwise)

- Align the matchmark by pulling the timing belt up on the water pump pulley side while turning the crankshaft pulley counterclockwise.

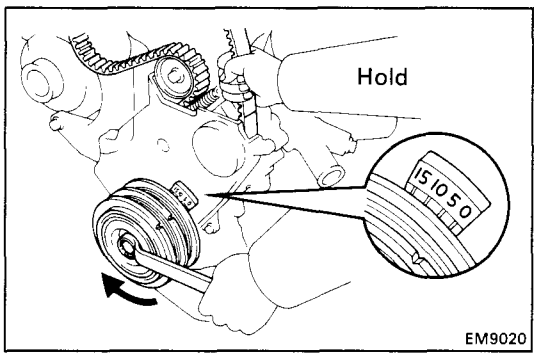

- After aligning the matchmark, hold the timing belt. And turn the crankshaft pulley clockwise, and align its groove with timing mark "0" of the No.1 timing belt cover.

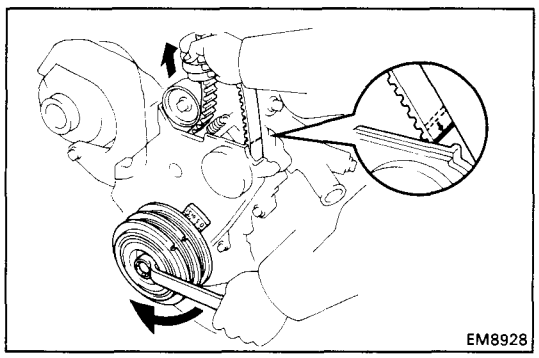

(When matchmark is out of alignment counter-clockwise)

- Align the matchmark by pulling the timing belt up on the No.1 idler pulley side while turning the crankshaft pulley clockwise.

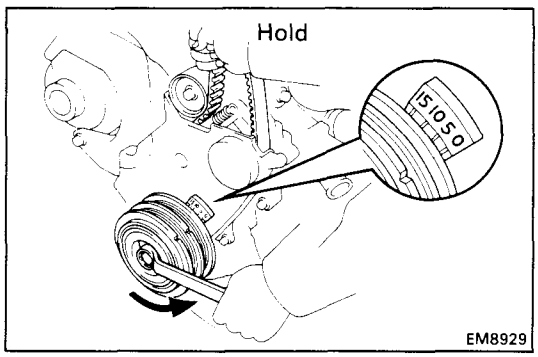

- After aligning the matchmark, hold the timing belt. And turn the crankshaft pulley counterclockwise, and align its groove with timing mark "0" of the No.1 timing belt cover.

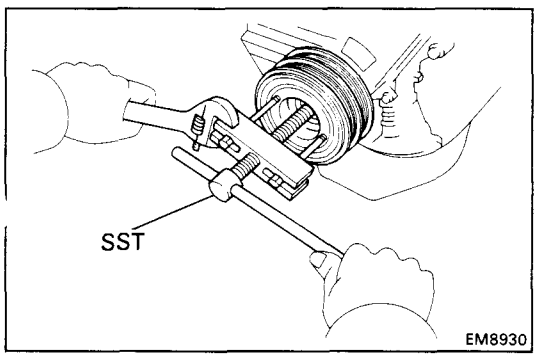

(b) Using SST, remove the pulley.

SST 09213-60017 (09213-00020, 09213-00030, 09213-00050)

HINT (When re-using timing belt): Remove the pulley without turning it.

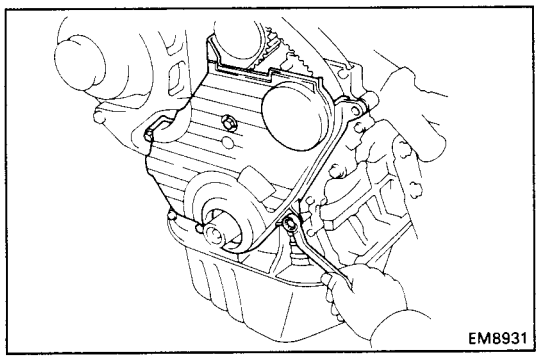

19. REMOVE NO.1 TIMING BELT COVER

Remove the four bolts, timing belt cover and gasket.

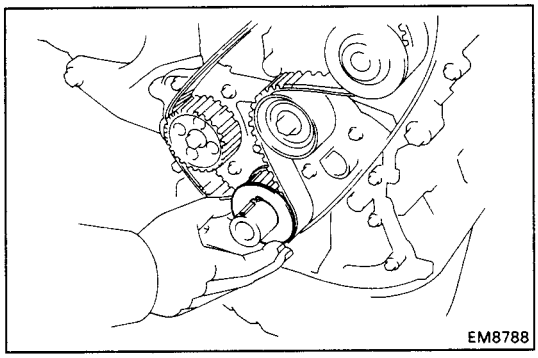

20. REMOVE TIMING BELT GUIDE

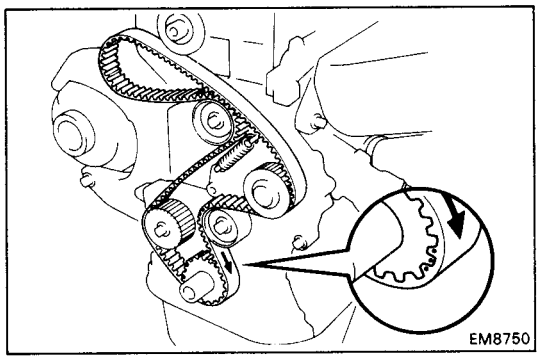

21. REMOVE TIMING BELT

HINT (When re-using timing belt): Draw a direction arrow on the timing belt (in direction of engine revolution), and place the matchmarks on the timing belt and crankshaft timing pulley.

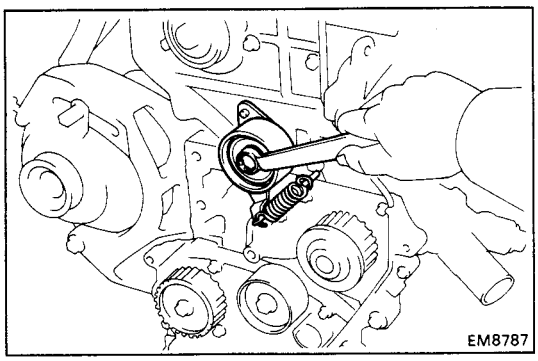

22. REMOVE NO.1 IDLER PULLEY AND TENSION SPRING

Remove the bolt, pulley and tension spring.

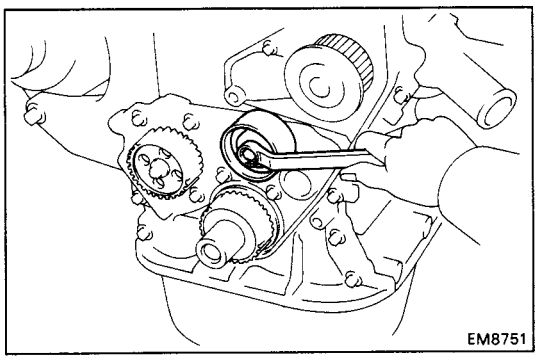

23. REMOVE NO.2 IDLER PULLEY

Remove the bolt and pulley.

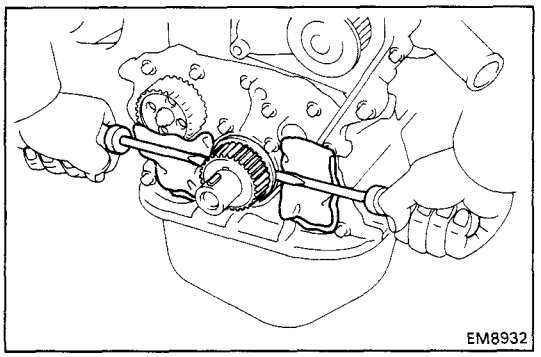

24. REMOVE CRANKSHAFT TIMING PULLEY

If the pulley cannot be removed by hand, use two screwdrivers.

HINT: Position shop rags as shown to prevent damage.

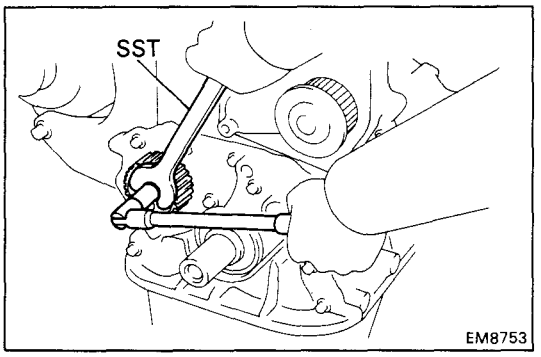

25. REMOVE OIL PUMP PULLEY

Using SST, remove the nut and pulley.

SST 09616-30011

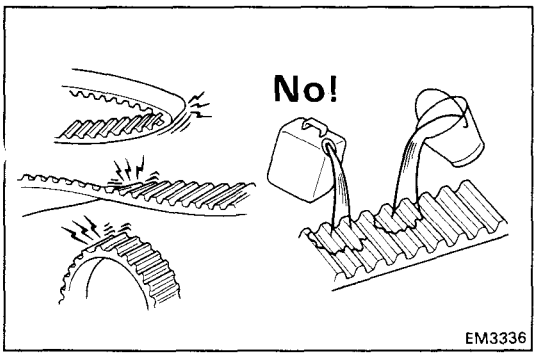

INSPECTION OF TIMING BELT COMPONENTS

1. INSPECT TIMING BELT

NOTICE:

- **Do not bend, twist or turn the timing belt inside out.**
- **Do not allow the timing belt to come into contact with oil, water or steam.**
- **Do not utilize timing belt tension when installing or removing the mount bolt of the camshaft timing pulley.**

If there are any defects as shown in the illustrations, check the following points:

(a) Premature parting
- Check for proper installation.
- Check the timing cover gasket for damage and proper installation.

(b) If the belt teeth are cracked or damaged, check to see if either camshaft or water pump is locked.

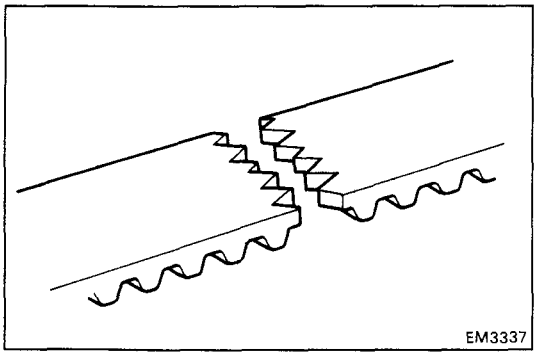

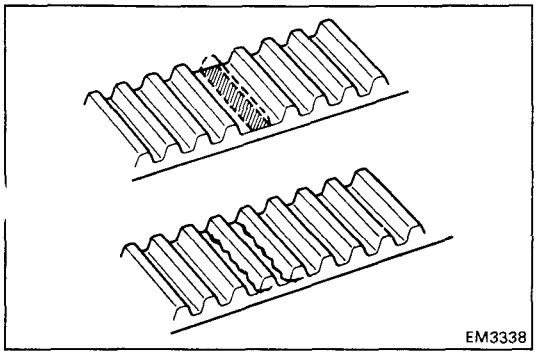

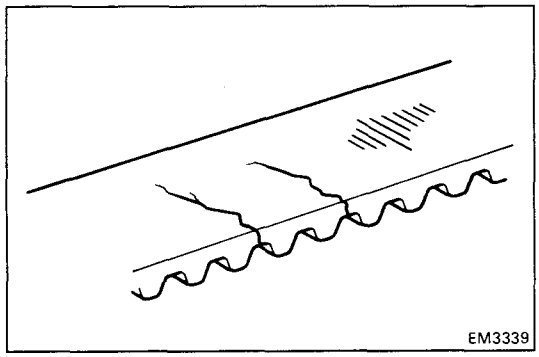

(c) If there is noticeable wear or cracks on the belt face, check to see if there are nicks on the side of the idler pulley lock.

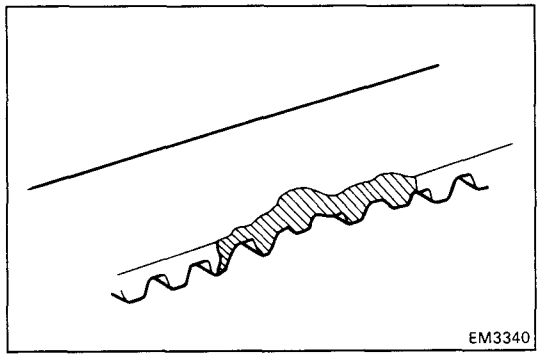

(d) If there is wear or damage on only one side of the belt, check the belt guide and the alignment of each pulley.

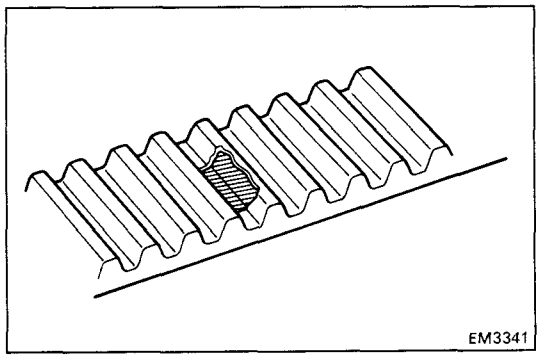

(e) If there is noticeable wear on the belt teeth, check the timing cover for damage, and correct gasket installation and the foreign material on the pulley teeth.

If necessary, replace the timing belt.

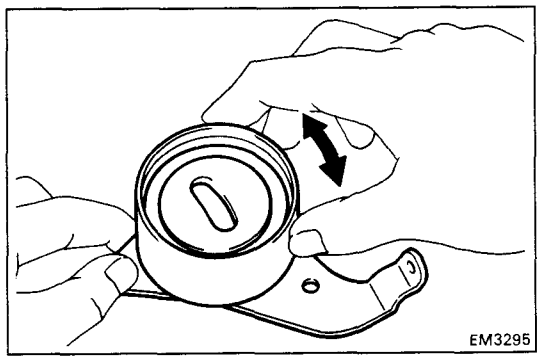

2. INSPECT IDLER PULLEYS

Check the turning smoothness of the idler pulley.

If necessary, replace the idler pulley.

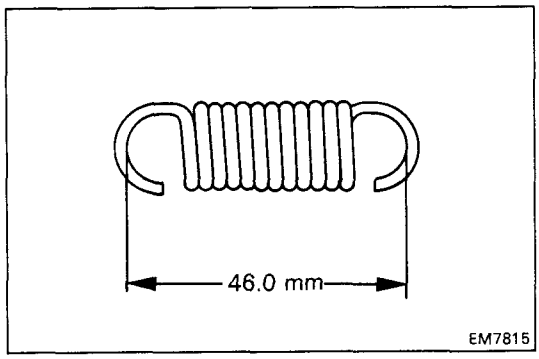

3. INSPECT TENSION SPRING

(a) Measure the free length of the tension spring.

Free length: 46.0 mm (1.811 in.)

If the free length is not as specified, replace the tension spring.

(b) Measure the tension of the tension spring at the specified installed length.

Installed tension:
4.75 – 5.25 kg (10.5 – 11.6 lb, 47 – 52 N·m)
at 50.5 mm (1.988 in.)

If the installed tension is not as specified, replace the tension spring.

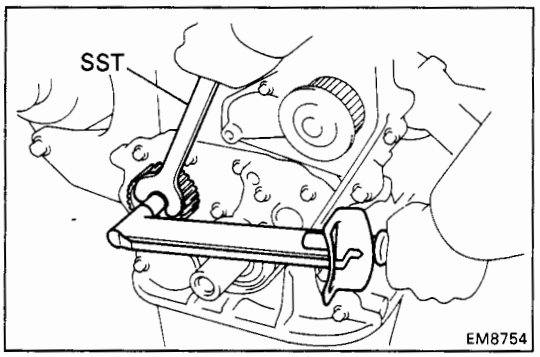

INSTALLATION OF TIMING BELT

(See page EM-47)

1. INSTALL OIL PUMP PULLEY

(a) Align the cutouts of the pulley and shaft, and slide on the pulley.

(b) Using SST, install the nut.

SST 09616-30011

Torque: 290 kg-cm (21 ft-lb, 28 N·m)

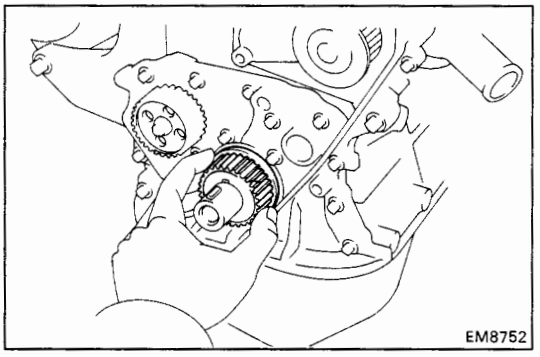

2. INSTALL CRANKSHAFT TIMING PULLEY

(a) Align the timing pulley set key with the key groove of the pulley.

(b) Slide on the timing pulley, facing the flange side inward.

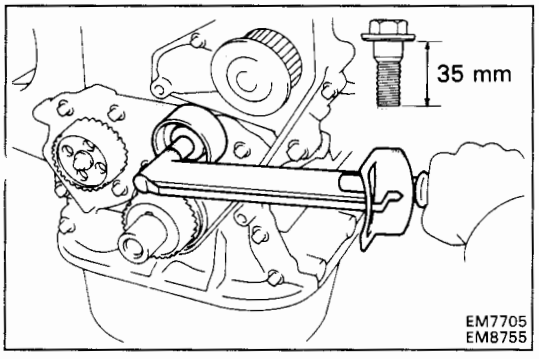

3. INSTALL NO.2 IDLER PULLEY

(a) Install the pulley with the bolt.

Torque: 425 kg-cm (31 ft-lb, 42 N·m)

HINT: Use bolt 35 mm (1.38 in.) in length.

(b) Check that the idler pulley moves smoothly.

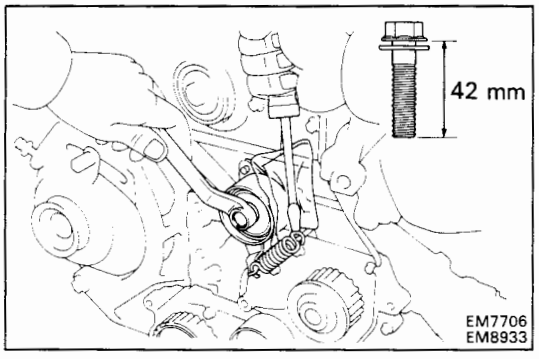

4. TEMPORARILY INSTALL NO.1 IDLER PULLEY AND TENSION SPRING

(a) Install the pulley with the bolt. Do not tighten the bolt yet.

HINT: Use bolt 42 mm (1.65 in.) in length.

(b) Install the tension spring.

(c) Pry the pulley toward the left as far as it will go and tighten the bolt.

(d) Check that the idler pulley moves smoothly.

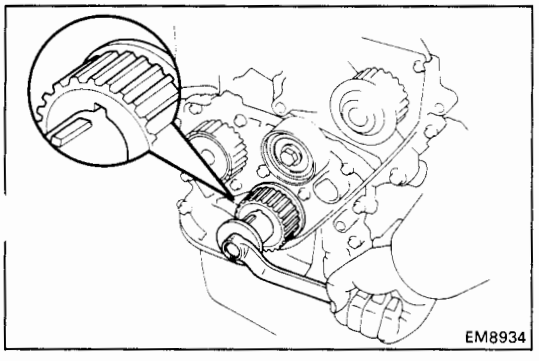

5. TEMPORARILY INSTALL TIMING BELT

NOTICE: The engine should be cold.

(a) Using the crankshaft pulley bolt, turn the crankshaft and position the key groove of the crankshaft timing pulley upward.

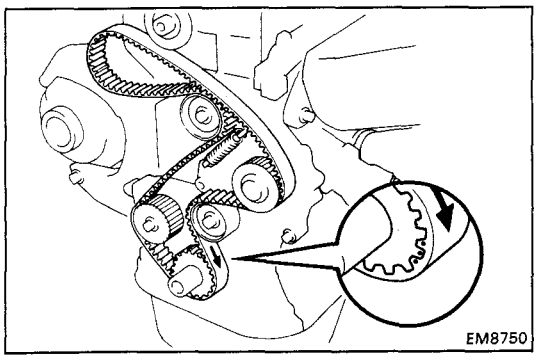

(b) Remove any oil or water on the crankshaft pulley, oil pump pulley, water pump pulley, No.1 idler pulley, No.2 idler pulley, and keep them clean.

(c) Install the timing belt on the crankshaft timing, oil pump pulley, No.2 idler pulley, water pump pulley and No.2 idler pulley.

HINT (When re-using timing belt): Align the match-marks of the camshaft timing pulley and timing belt, and install the belt with the arrow pointing in the direction of engine revolution.

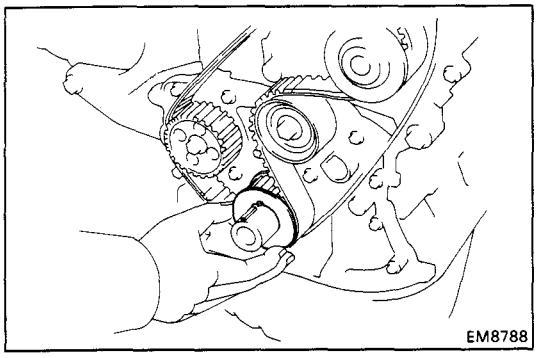

6. INSTALL TIMING BELT GUIDE

Install the guide, facing the cup side outward.

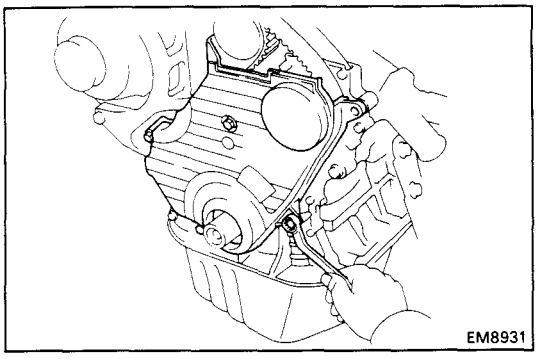

7. INSTALL NO.1 TIMING BELT COVER

(a) Install the gasket to the timing belt cover.

(b) Install the timing belt cover with the four bolts.

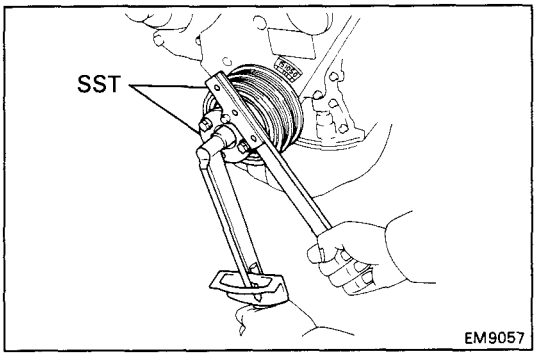

8. INSTALL CRANKSHAFT PULLEY

(a) Align the pulley set key with the key groove of the pulley, slide on the pulley.

(b) Using SST, install the pulley bolt.

SST 09213-54015 (09214-00030) and 09330-00021

Torque: 1,100 kg-cm (80 ft-lb, 108 N·m)

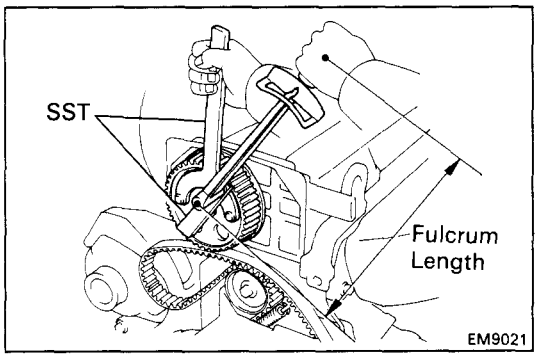

9. INSTALL CAMSHAFT TIMING PULLEY

(a) Align the camshaft knock pin with the knock pin groove of the pulley, and slide on the timing pulley.

(b) Using SST, install the plate washer and bolt.

SST 09249-63010 and 09278-54012

Torque: 380 kg-cm (27 ft-lb, 37 N·m)

HINT: Use a torque wrench with a fulcrum length of 340 mm (13.39 in.).

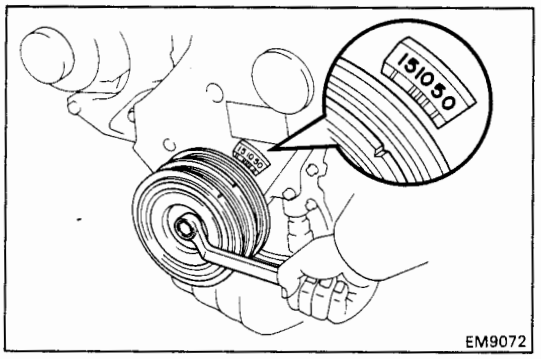

10. SET NO.1 CYLINDER TO TDC/COMPRESSION

(a) Turn the crankshaft pulley, and align its groove with timing mark "0" of the No.1 timing belt cover.

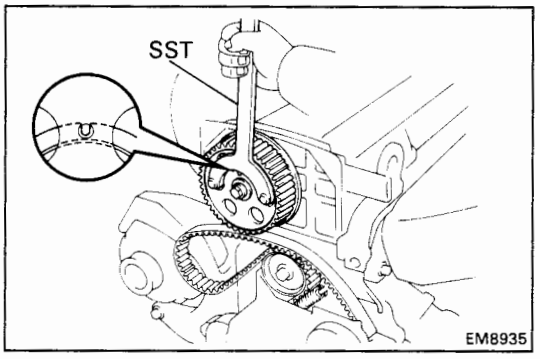

(b) Using SST, turn the camshaft, and align the hole of the camshaft timing pulley with the timing mark of the bearing cap.

SST 09278-54012

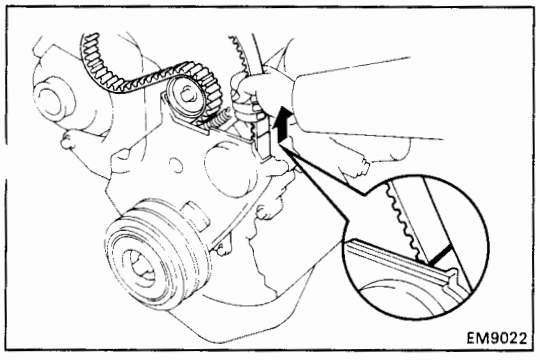

11. INSTALL TIMING BELT

HINT (When re-using timing belt):

- Check that the matchmark on the timing belt matches the end of the No.1 timing belt cover.

If the matchmark does not align, shift the meshing of the timing belt and crankshaft timing pulley until they align. (See page EM-51)

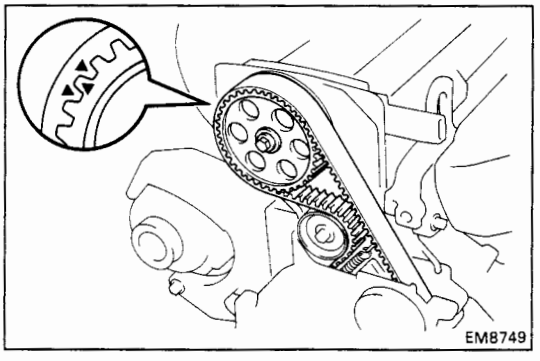

- Align the matchmarks of the timing belt and camshaft timing pulley.

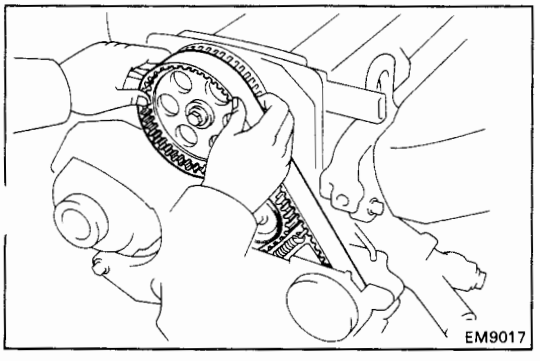

(a) Remove any oil or water on the camshaft timing pulley, and keep it clean.

(b) Install the timing belt, insure that there is tension between the crankshaft timing pulley and camshaft timing pulley.

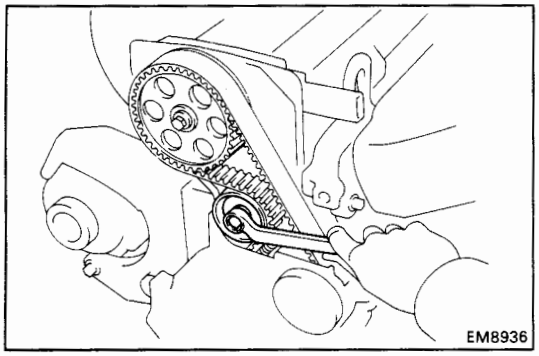

12. CHECK VALVE TIMING

(a) Loosen the No.1 idler pulley bolt 1/2 turn.

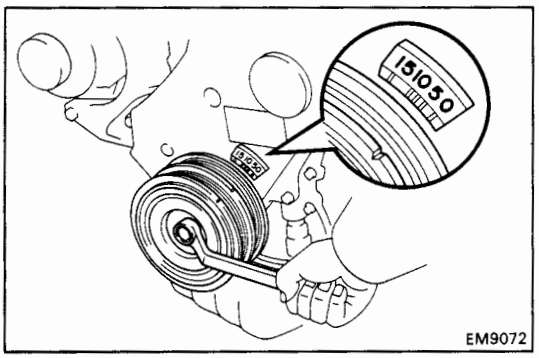

(b) Turn the crankshaft pulley two revolutions from TDC to TDC.

NOTICE: Always turn the crankshaft clockwise.

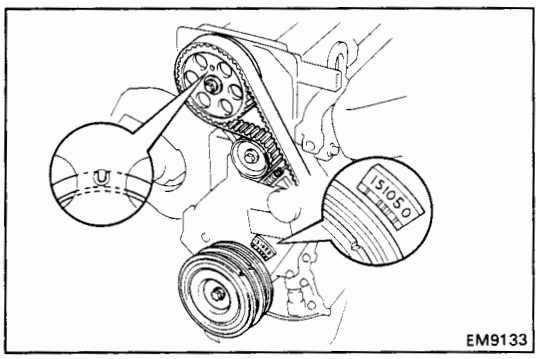

(c) Check that each pulley aligns with the timing marks as shown in the figure.

If the timing marks do not align, remove the timing belt and reinstall it.

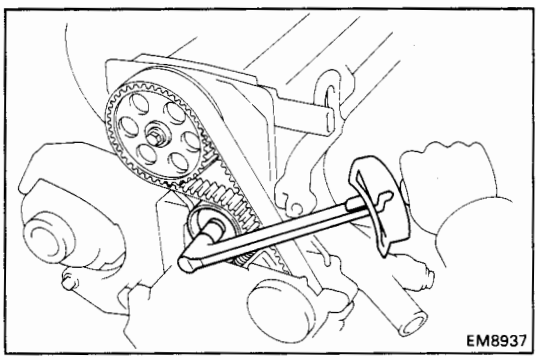

(d) Torque the mount bolt of the No.1 idler pulley.

Torque: 425 kg-cm (31 ft-lb, 42 N·m)

13. INSTALL SPARK PLUGS (See page IG-12)

Torque: 180 kg-cm (13 ft-lb, 18 N·m)

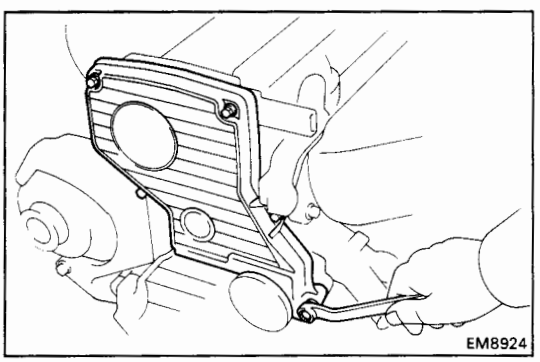

14. INSTALL NO.2 TIMING BELT COVER

(a) Install the two gaskets to the No.1 and No.2 belt covers.

(b) Install the belt cover with the five bolts.

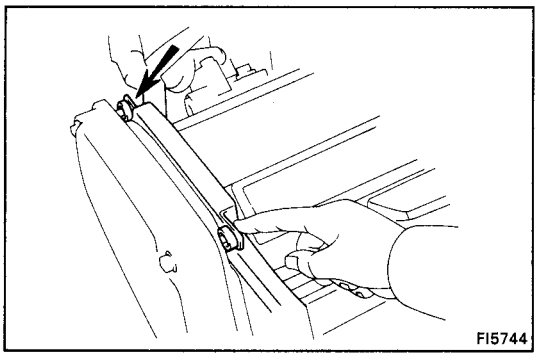

(c) Install the two clamps of the engine wire to each bolt.

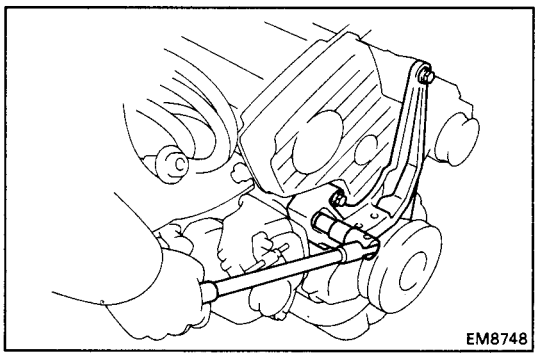

15. INSTALL RH ENGINE MOUNTING BRACKET

Install the bracket with the three bolts.

Torque: 530 kg-cm (38 ft-lb, 52 N·m)

HINT: Lower the jack and perform the operation with the engine fully up.

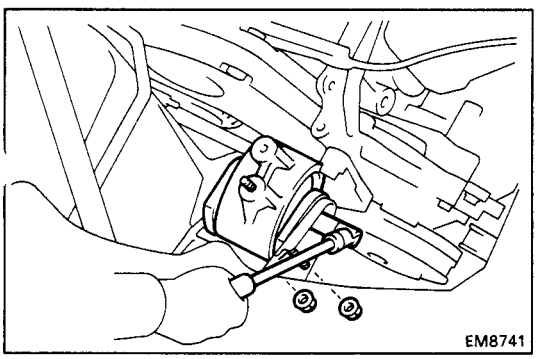

16. INSTALL RH ENGINE MOUNTING INSULATOR

Install the mounting insulator with the through bolt and two nuts.

Torque:

Nut	**530 kg-cm (38 ft-lb, 52 N·m)**
Through bolt	**800 kg-cm (58 ft-lb, 78 N·m)**

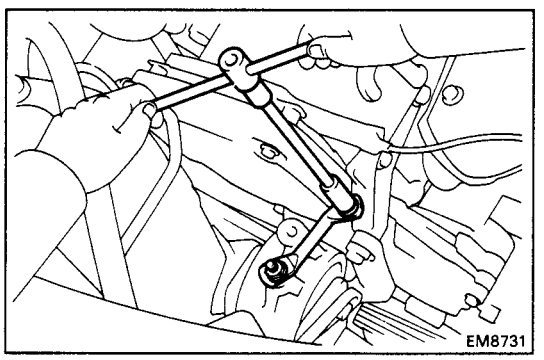

17. INSTALL RH ENGINE MOUNTING STAY

Install the mounting stay with the bolt and nut.

Torque: 740 kg-cm (54 ft-lb, 73 N·m)

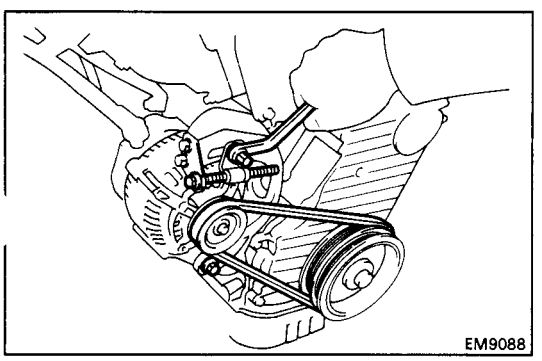

18. INSTALL ALTERNATOR DRIVE BELT

Install the drive belt with the adjusting bolt, lock bolt and pivot bolt.

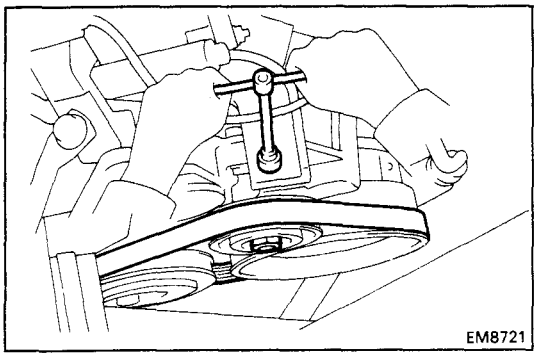

19. INSTALL A/C DRIVE BELT

Install the drive belt with the adjusting bolt and idler pulley bolt.

20. INSTALL RH FRONT WHEEL

21. INSTALL CRUISE CONTROL ACTUATOR (w/ CRUISE CONTROL SYSTEM) AND ACCELERATOR LINKAGE (See step 33 pages EM-225)

22. CONNECT CABLE TO NEGATIVE TERMINAL OF BATTERY

23. CHECK AND ADJUST DRIVE BELTS

(a) Adjust the alternator drive belt. (See page CH-3)

Drive belt tension: New belt 120 ± 20 lb
Used belt 104 ± 20 lb

(b) Adjust the A/C drive belt.

Drive belt tension: New belt 160 ± 20 lb
Used belt 100 ± 20 lb

24. INSTALL SUSPENSION UPPER BRACE (See step 36 on page EM-226)

25. INSTALL RH ENGINE HOOD SIDE PANEL

26. INSTALL ENGINE UNDER COVERS

CYLINDER HEAD (3S-GTE)

COMPONENTS

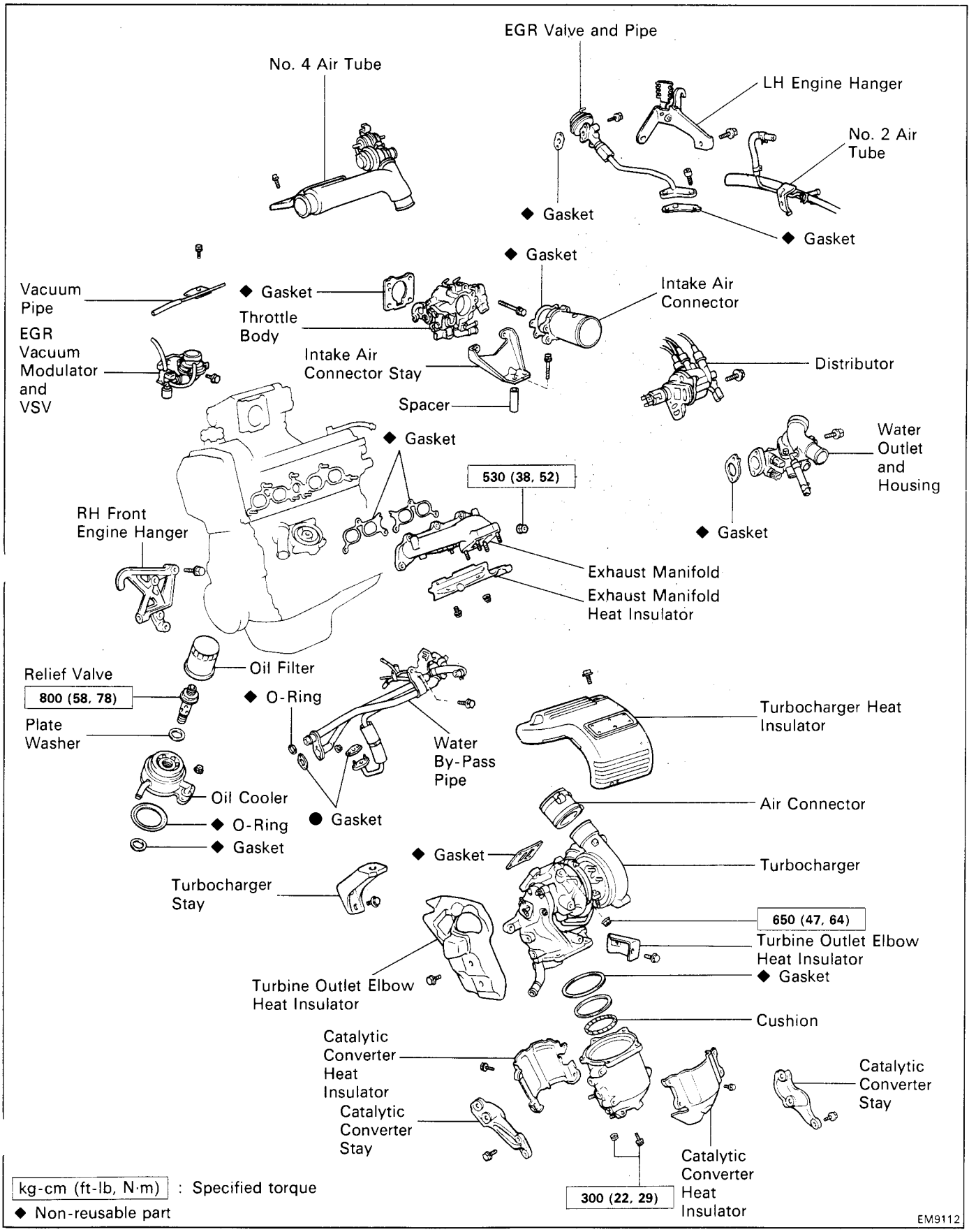

COMPONENTS (Cont'd)

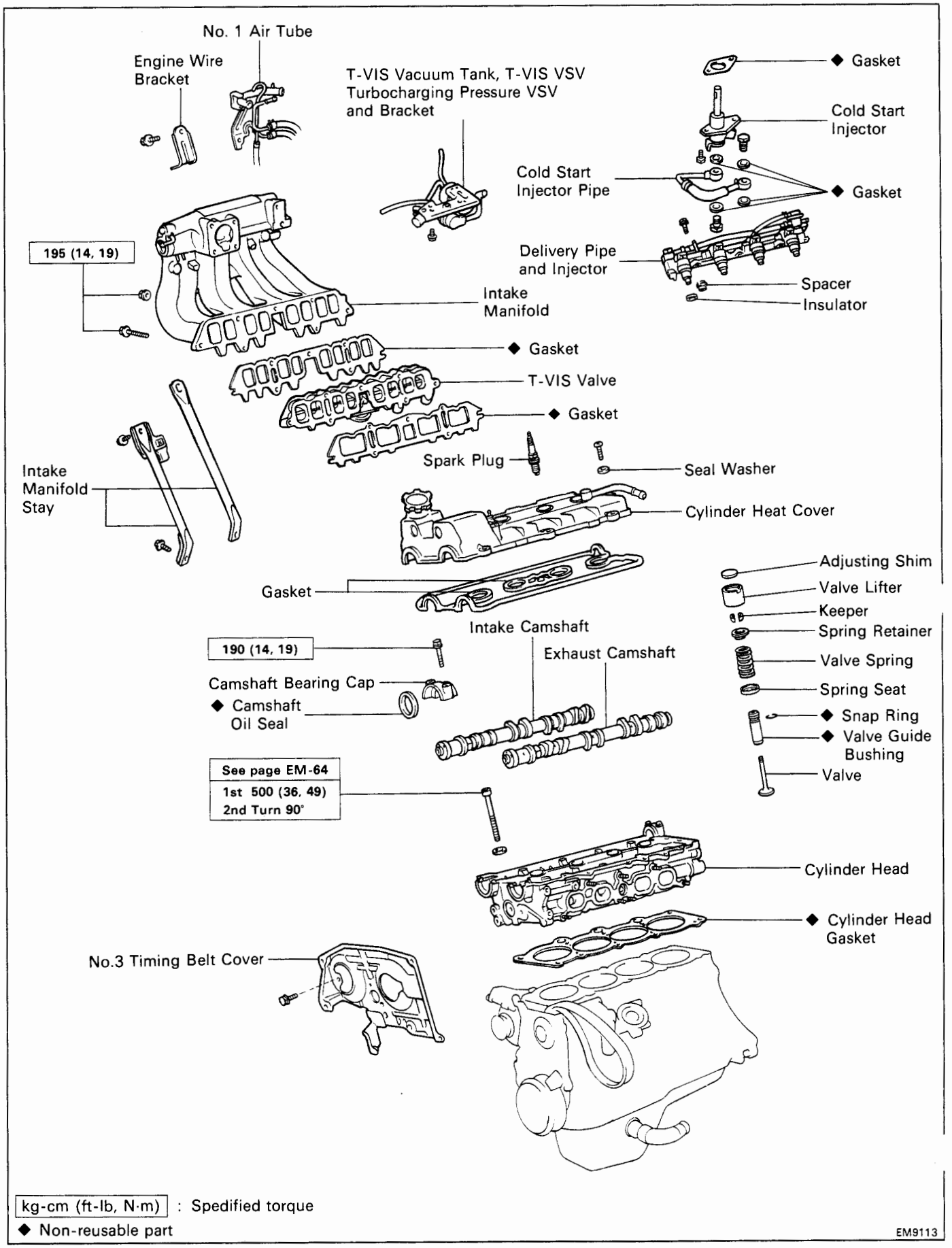

kg-cm (ft-lb, N·m) : Spedified torque

◆ Non-reusable part

EM9113

REMOVAL OF CYLINDER HEAD

(See pages EM-61 and 62)

1. **DISCONNECT CABLE FROM NEGATIVE TERMINAL OF BATTERY**

   CAUTION: Work must be started after approx. 20 seconds or longer from the time the ignition switch is turned to the "LOCK" position and the negative (–) terminal cable is disconnected from the battery.

2. **DRAIN ENGINE COOLANT (See page CO-6)**

3. **REMOVE ENGINE UNDER COVERS**

4. **REMOVE ENGINE HOOD SIDE PANELS**

5. **REMOVE SUSPENSION UPPER BRACE (See step 8 on page EM-134)**

6. **DISCONNECT ACCELERATOR CABLE FROM THROTTLE BODY**

7. **REMOVE CRUISE CONTROL ACTUATOR (w/ CRUISE CONTROL SYSTEM) AND ACCELERATOR LINKAGE (See step 13 on page EM-135)**

8. **REMOVE AIR CLEANER CAP (See step 9 on page EM-134)**

9. **DISCONNECT GROUND STRAP CONNECTOR**

10. **DISCONNECT HOSES**

    (a) Brake booster vacuum hose from intake manifold

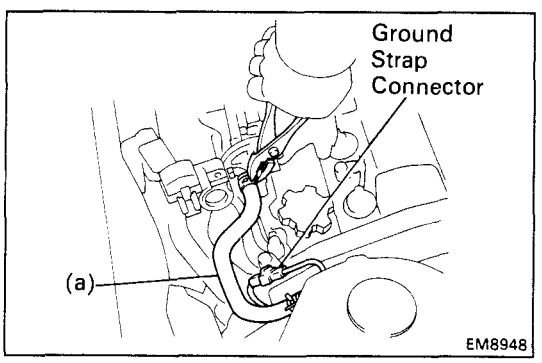

    (b) Turbocharging pressure sensor hose from intake manifold

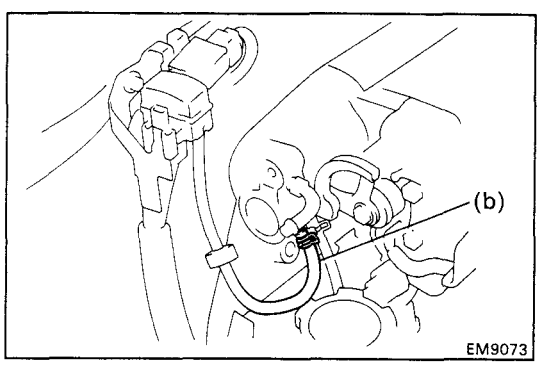

    (c) A/C VSV vacuum hose from intake manifold

    (d) A/C VSV air hose from No.2 air tube

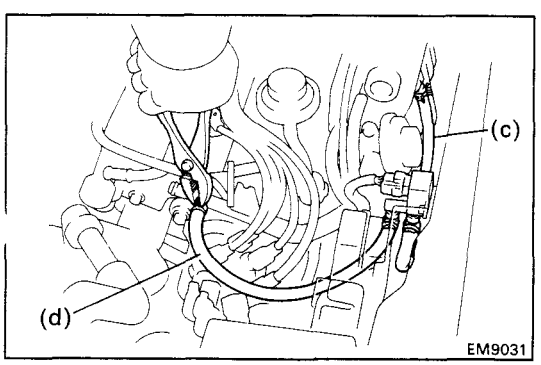

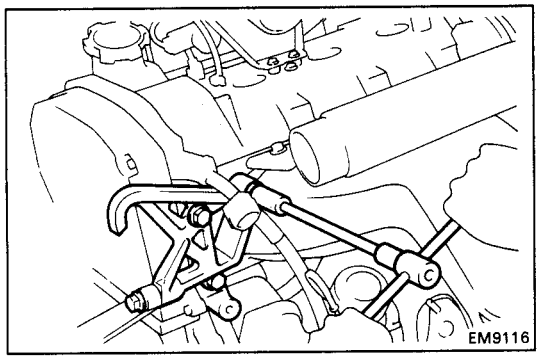

11. REMOVE RH FRONT ENGINE HANGER

Remove the three bolts and engine hanger.

12. REMOVE INTERCOOLER

(See steps 4, 5, 7, 8 and 10 to 13 on pages TC-20 to 22)

13. REMOVE FRONT EXHAUST PIPE

(See step 30 and 31 on pages EM-138 and 139)

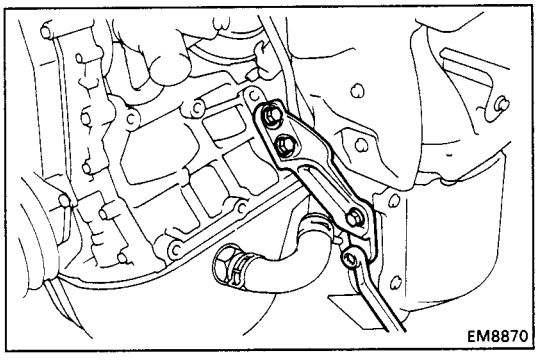

14. REMOVE CATALYTIC CONVERTER

(a) Remove the four bolts and RH converter stay.

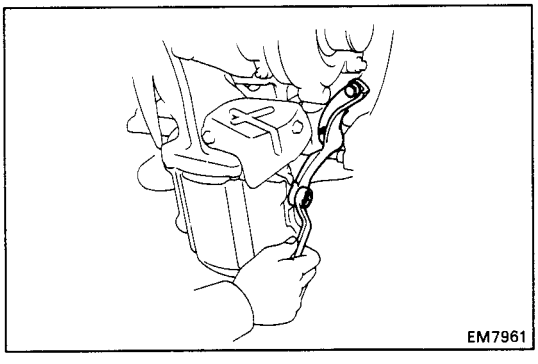

(b) Remove the three bolts and LH converter stay.

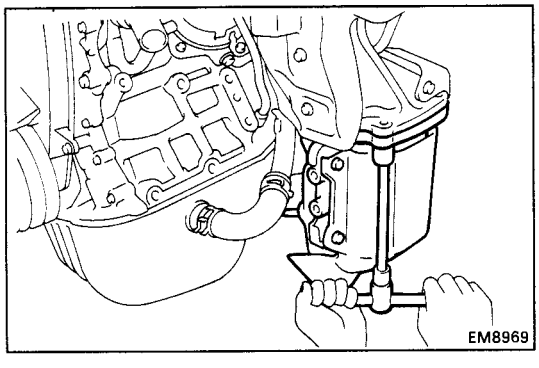

(c) Remove the three bolts, two nuts and catalytic converter. Remove the gasket, retainer and cushion.

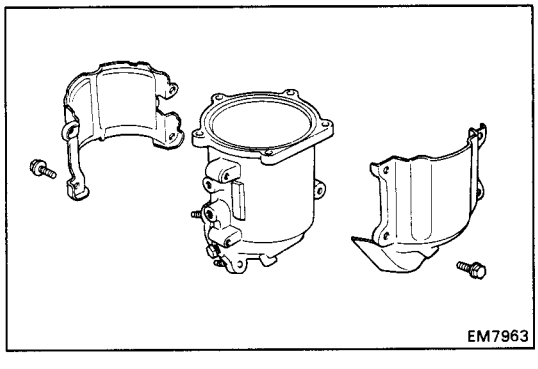

(d) Remove the five bolts and front heat insulator.

(e) Remove the four bolts and rear heat insulator.

15. REMOVE TURBOCHARGER
(See steps 8, 11, 12 and 18 to 24 on pages TC-9 and 12)

16. REMOVE THROTTLE BODY
(See steps 5 to 8, 10 and 11 on pages FI-135 and 136)

17. REMOVE COLD START INJECTOR
(See steps 2 to 4 on pages FI-99 and 100)

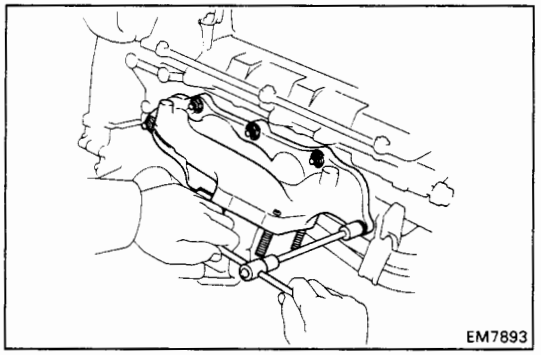

18. REMOVE EXHAUST MANIFOLD

(a) Remove the seven nuts, exhaust manifold and gasket.

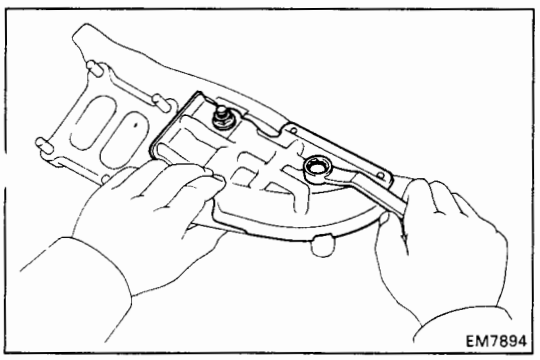

(b) Remove the bolt, nut and heat insulator.

19. REMOVE DISTRIBUTOR (See pages IG-14 and 15)

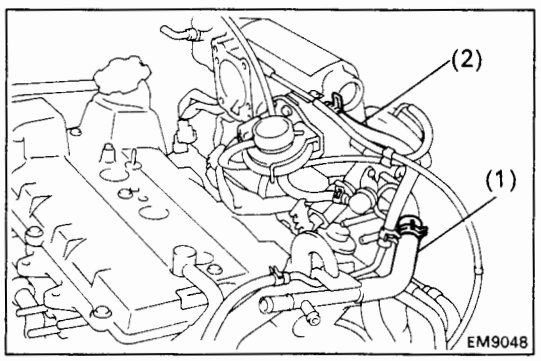

20. REMOVE NO.2 AIR TUBE

(a) Disconnect the following hose:
  (1) Air hose from No.1 air tube
  (2) Air hose from intake manifold

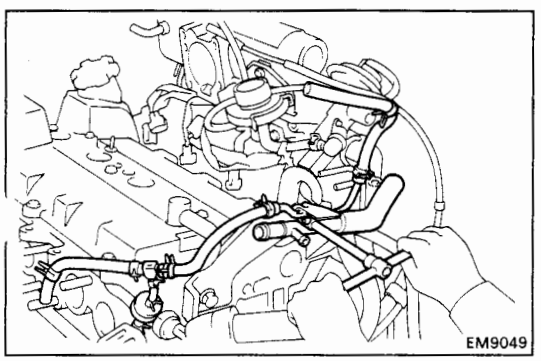

(b) Remove the bolt and No.2 air tube.

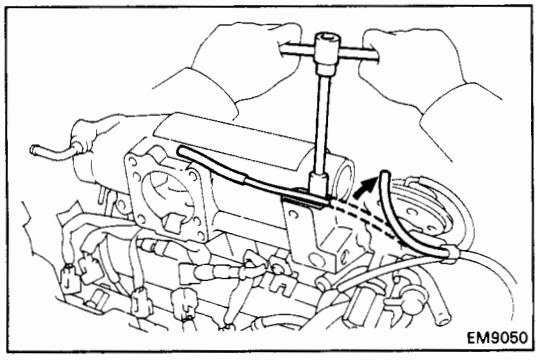

21. REMOVE LH ENGINE HANGER

Remove the two bolts and engine hanger.

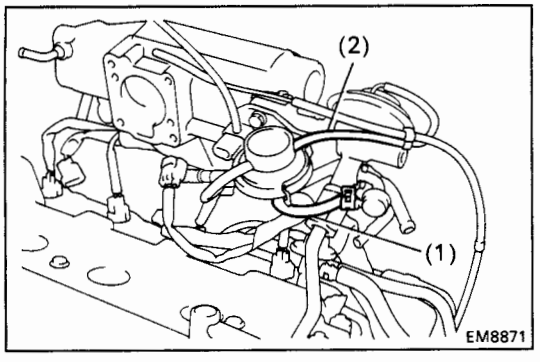

22. REMOVE EGR VACUUM MODULATOR AND VSV

(a) Disconnect the EGR VSV connector.

(b) Disconnect the following hoses:

(1) Vacuum hose from EGR valve

(2) Vacuum hose from EGR vacuum modulator

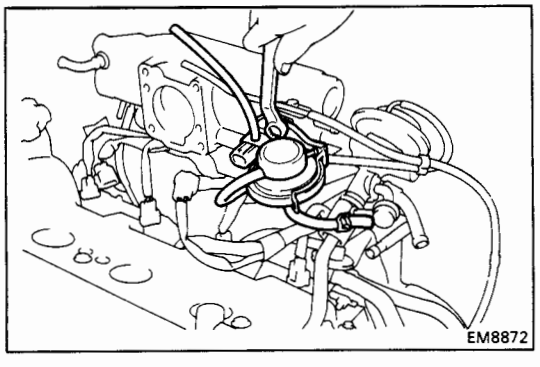

(c) Remove the bolt, vacuum modulator and VSV assembly.

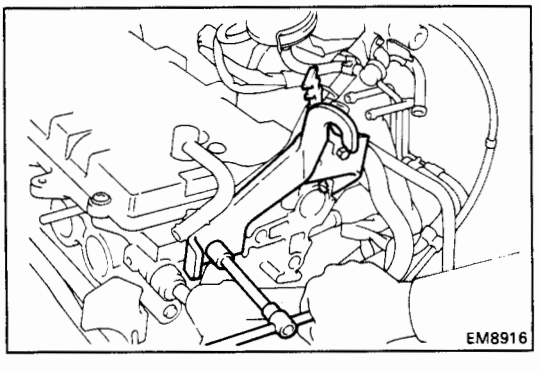

23. REMOVE VACUUM PIPE

(a) Disconnect the vacuum hose from the vacuum pipe.

(b) Remove the bolt and vacuum pipe.

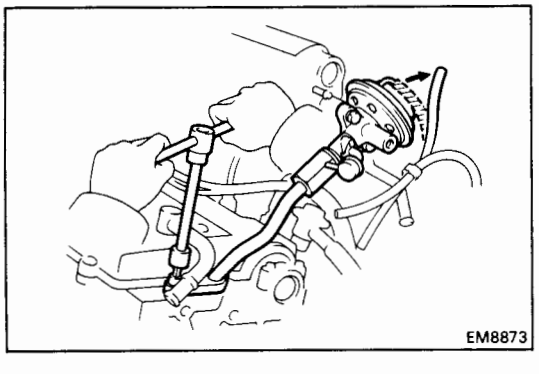

24. REMOVE EGR VALVE AND PIPE

(a) Disconnect the vacuum hose from the EGR valve.

(b) Remove the four bolts, the EGR valve, pipe assembly and two gaskets.

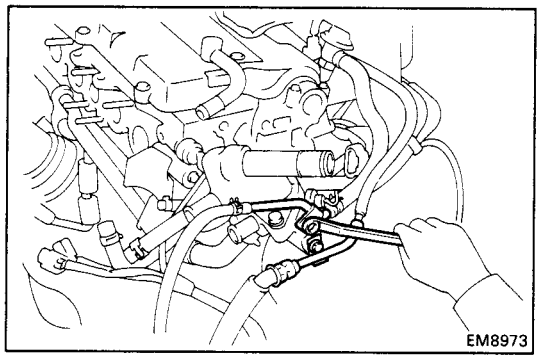

25. REMOVE WATER OUTLET AND HOUSING

(a) Disconnect the following connectors:
- Water temperature sender gauge connector
- Water temperature sensor
- Cold start injector time switch connector

(b) Remove the bolt, and disconnect the fuel inlet hose.

(c) Remove the bolt, and disconnect the fuel return hose.

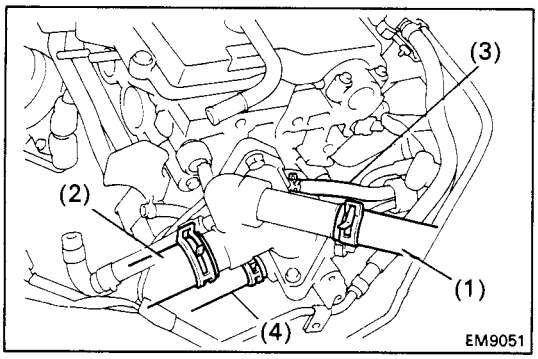

(d) Disconnect the following hoses:
(1) Water filler hose
(2) Radiator hose
(3) Water by-pass pipe hose from ISC valve
(4) Heater water hose

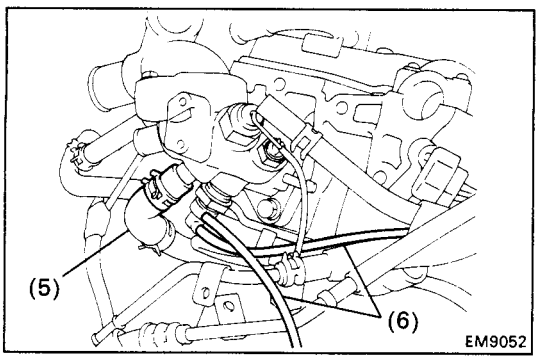

(5) Water by-pass hose from water by-pass pipe
(6) Two EVAP VSV vacuum hoses

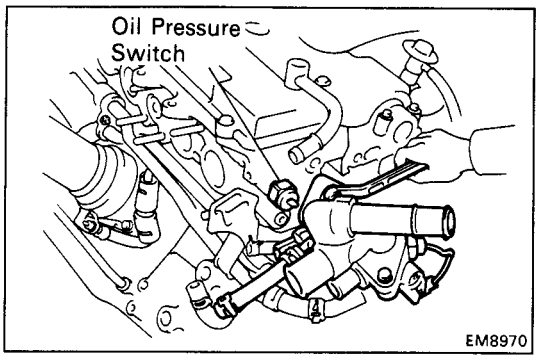

(e) Remove the two bolts, the water outlet, housing assembly and gasket.

26. REMOVE OIL PRESSURE SWITCH

27. REMOVE OIL COOLER
(See steps 7 to 10 on pages LU-18 and 19)

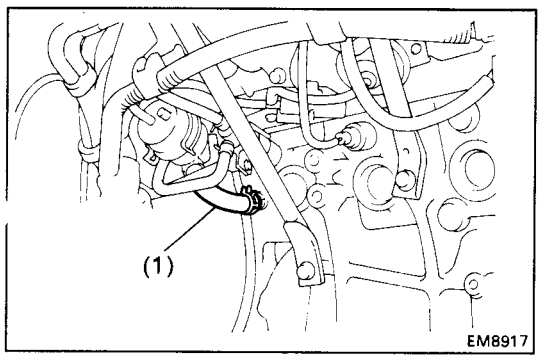

28. REMOVE WATER BY-PASS PIPE

(a) Disconnect the following hoses:
(1) Water by-pass hose from cylinder block

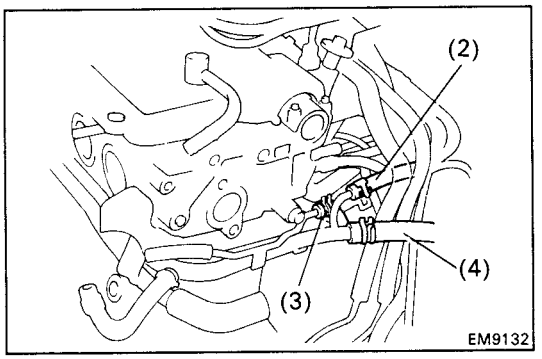

(2) Water by-pass hoses from No.1 air tube

(3) Vacuum hose from turbocharging pressure VSV

(4) Heater water hose

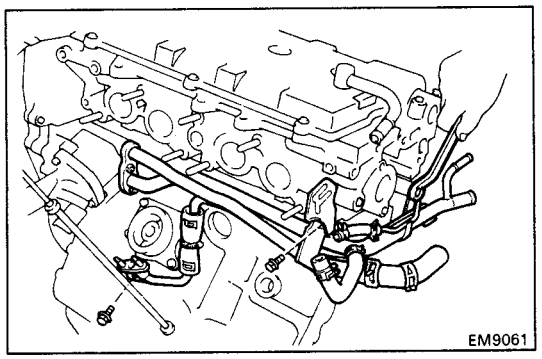

(b) Remove the two bolts, two nuts, water by-pass pipe, gasket and O-ring.

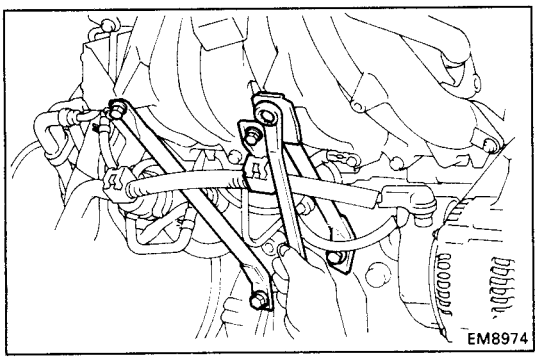

29. REMOVE INTAKE MANIFOLD STAYS

(a) Disconnect the alternator wire clamp from the wire bracket.

(b) Remove the two bolts and manifold stay. Remove the two manifold stays

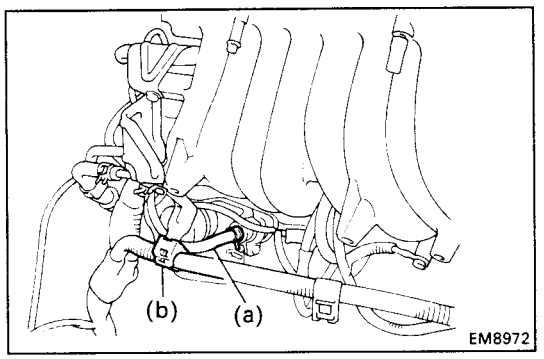

30. REMOVE NO.1 AIR TUBE

(a) Disconnect the Vacuum hose from the turbocharging pressure VSV.

(b) Disconnect the alternator wire clamp from the wire bracket.

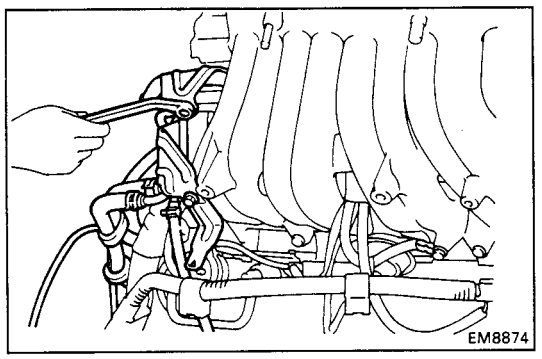

(c) Remove the two bolts, wire bracket and air tube.

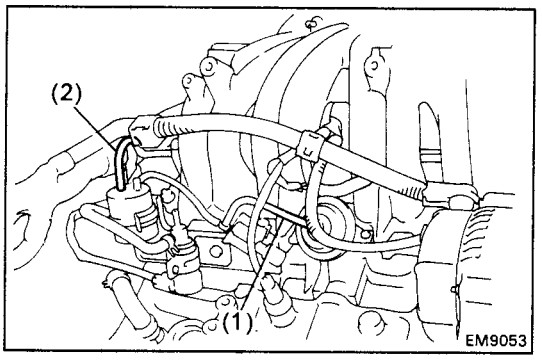

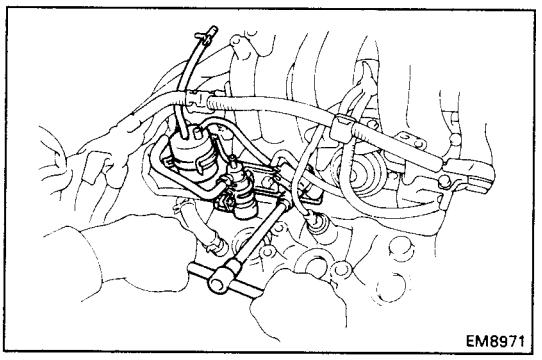

31. REMOVE T-VIS VACUUM TANK, T-VIS VSV, TURBOCHARGING PRESSURE VSV AND BRACKET

(a) Disconnect the following connectors:
- T-VIS VSV connector
- Turbocharging pressure VSV connector

(b) Disconnect the following hoses:
(1) Vacuum hose (from T-VIS VSV) from T-VIS actuator
(2) Vacuum hose (from T-VIS vacuum tank) from intake manifold

(c) Remove the two bolts, the T-VIS vacuum tank, T-VIS VSV, turbocharging pressure VSV and bracket assembly.

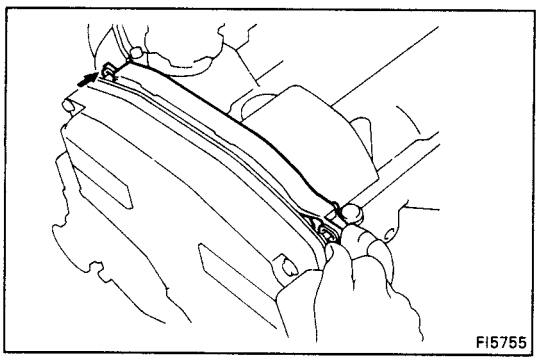

32. DISCONNECT ENGINE WIRE FROM INTAKE MANIFOLD

(a) Disconnect the two engine wire clamps from the mount bolts on the No.2 timing belt covers.

(b) Disconnect the injector connector.

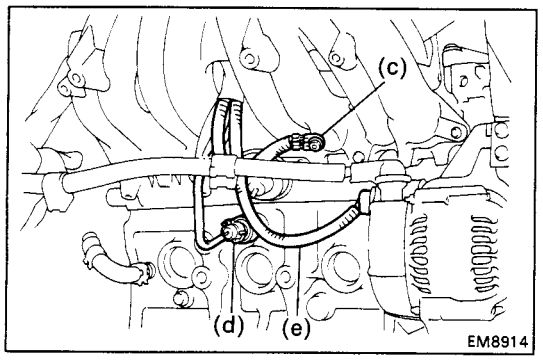

(c) Remove the bolt, and disconnect the ground strap.

(d) Disconnect the knock sensor connector.

(e) Disconnect the alternator connector.

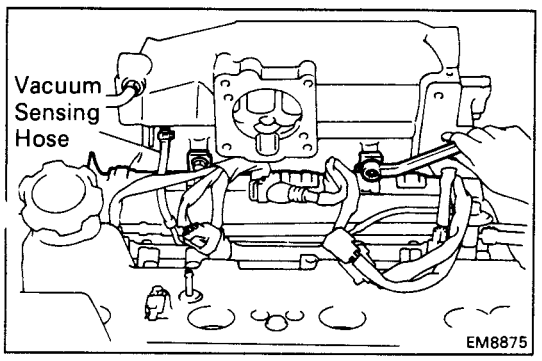

(f) Disconnect the vacuum sensing hose from the intake manifold.

(g) Remove the two bolts, and disconnect the engine wire from the intake manifold.

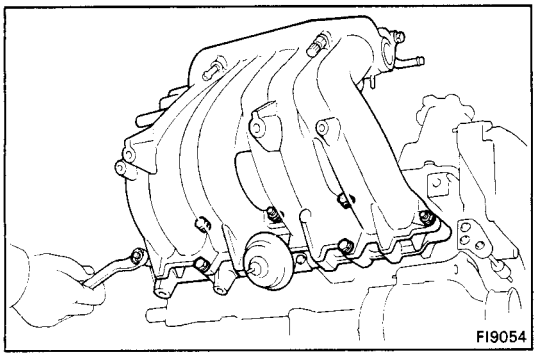

33. REMOVE INTAKE MANIFOLD AND T-VIS VALVE

Remove the four bolts, three nuts, intake manifold, T-VIS VSV and two gaskets.

34. REMOVE DELIVERY PIPE AND INJECTORS
(See steps 9, 13 to 15 on pages FI-111 and 112)

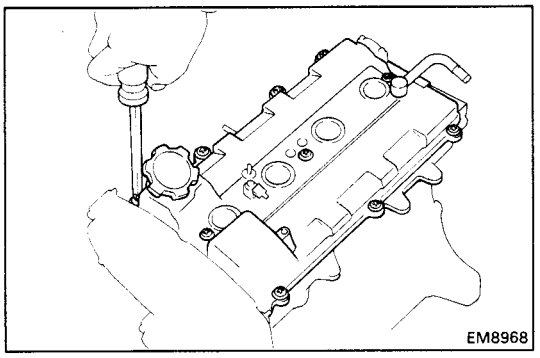

35. REMOVE CYLINDER HEAD COVER

Remove the ten screws, seal washers, head cover and two gaskets.

36. REMOVE CAMSHAFT TIMING PULLEYS
(See steps 9 to 21 on pages EM-27 to 29)

37. REMOVE NO.1 IDLER PULLEY
(See step 26 on page EM-31)

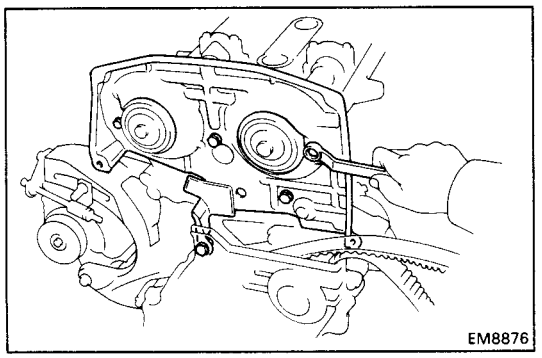

38. REMOVE NO.3 TIMING BELT COVER

Remove the five bolts and timing belt cover.

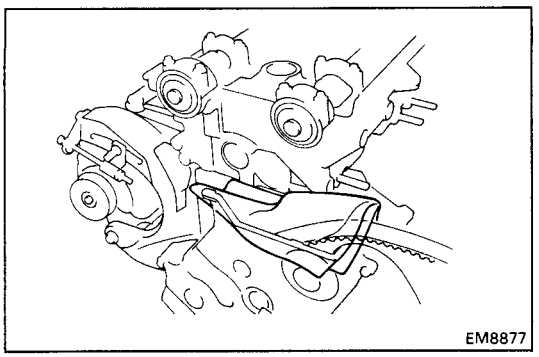

HINT:

- Support the timing belt, so that the meshing of the crankshaft timing pulley and timing belt does not shift.
- Be careful not to drop anything inside the timing belt cover.
- Do not allow the timing belt to come into contact with oil, water or dust.

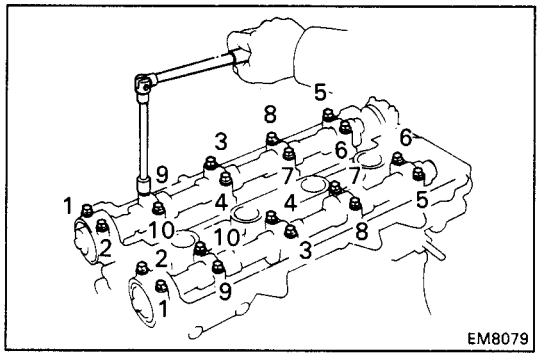

39. REMOVE CAMSHAFTS

Uniformly loosen and remove the ten bearing cap bolts in several passes in the sequence shown, and remove the five bearing caps, oil seal and camshaft. Remove the intake and exhaust camshafts.

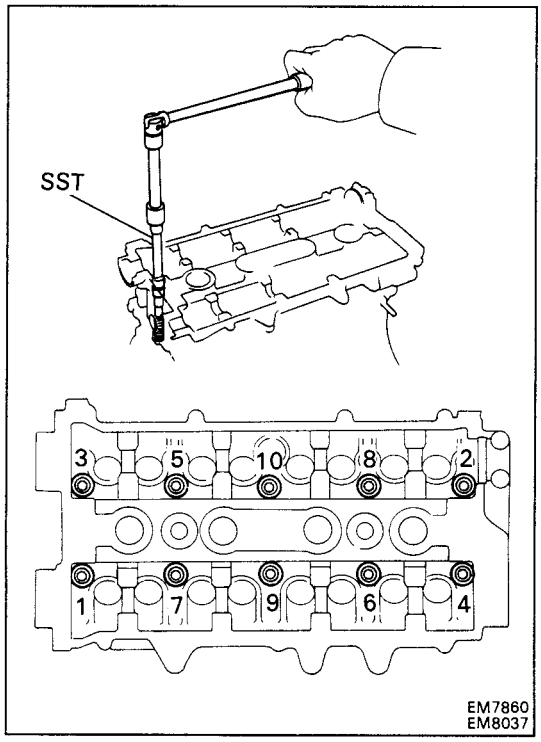

40. REMOVE CYLINDER HEAD

(a) Using SST, uniformly loosen and remove the ten cylinder head bolts in several passes in the sequence shown.

SST 09043-38100

HINT: Cylinder head warpage or cracking could result from removing in the incorrect order.

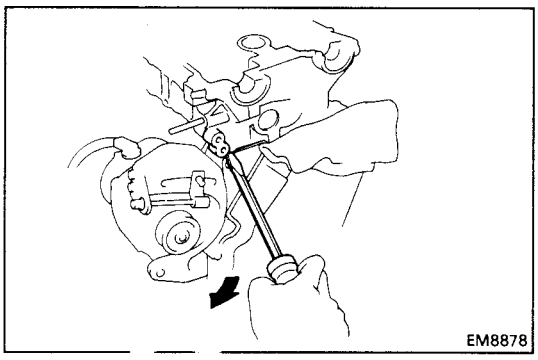

(b) Lift the cylinder head from the dowels on the cylinder block, and place the cylinder head on wooden blocks on a bench.

HINT: If the cylinder head is difficult to lift off, pry between the cylinder head and cylinder block with a screwdriver.

NOTICE: Be carefull not to damage the contact surfaces of the cylinder head and cylinder block.

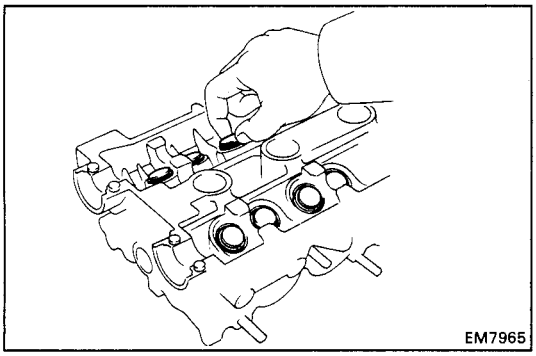

DISASSEMBLY OF CYLINDER HEAD

(See pages EM-61 and 62)

1. REMOVE VALVE LIFTERS AND SHIMS

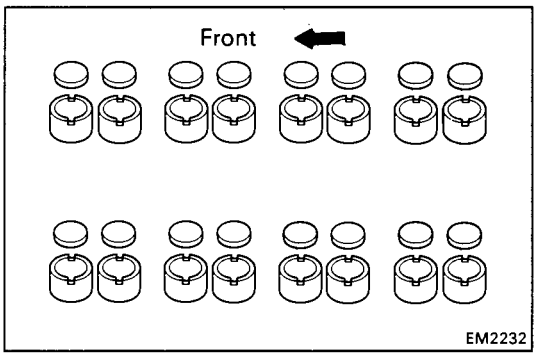

HINT: Arrange the valve lifters and shims in correct order.

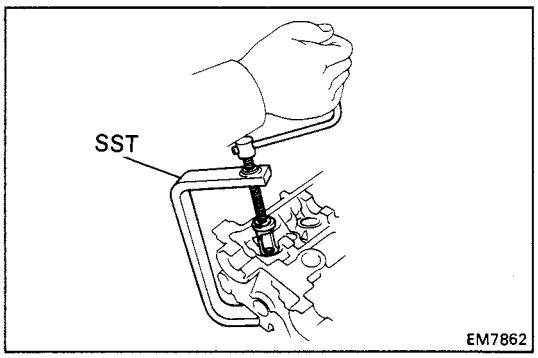

2. REMOVE VALVES

(a) Using SST, compress the valve spring and remove the two keepers.

SST 09202-70010

(b) Remove the spring retainer, valve spring, valve and spring seat.

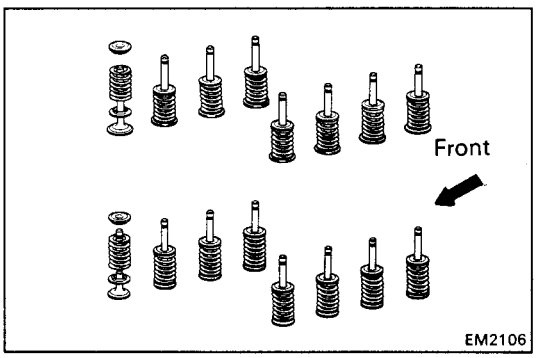

HINT: Arrange the valves, valve springs, spring seats and spring retainers in correct order.

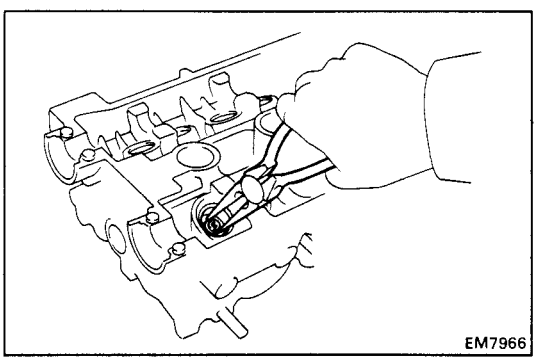

(c) Using needle-nose pliers, remove the oil seal.

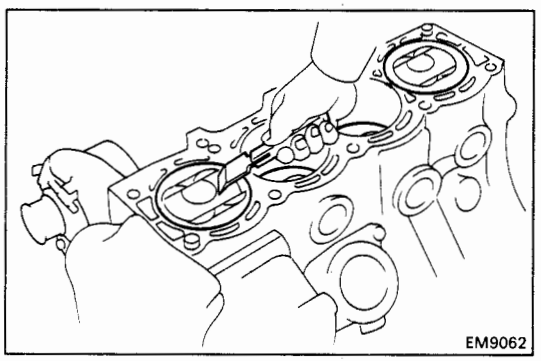

INSPECTION, CLEANING AND REPAIR OF CYLINDER HEAD COMPONENTS

1. CLEAN TOP SURFACES OF PISTONS AND CYLINDER BLOCK

(a) Turn the crankshaft, and bring each piston to top dead center (TDC). Using a gasket scraper, remove all the carbon from the piston top surface.

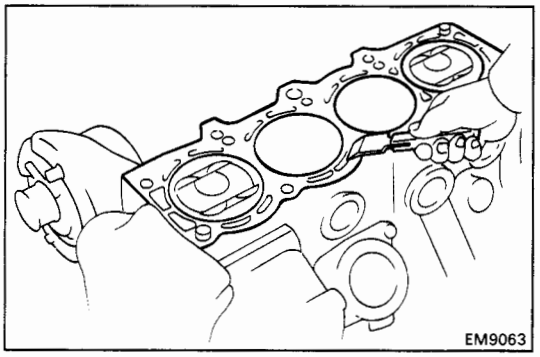

(b) Using a gasket scraper, remove all the gasket material from the top surface of the cylinder block.

(c) Using compressed air, blow carbon and oil from the bolt holes.

CAUTION: Protect your eyes when using high-compressed air.

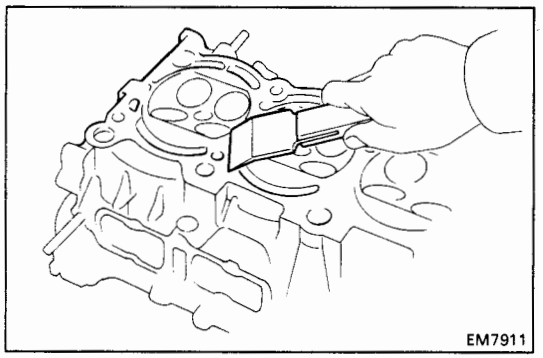

2. CLEAN CYLINDER HEAD

A. Remove gasket material

Using a gasket scraper, remove all the gasket material from the cylinder block surface.

NOTICE: Be careful not to scratch the cylinder block contact surface.

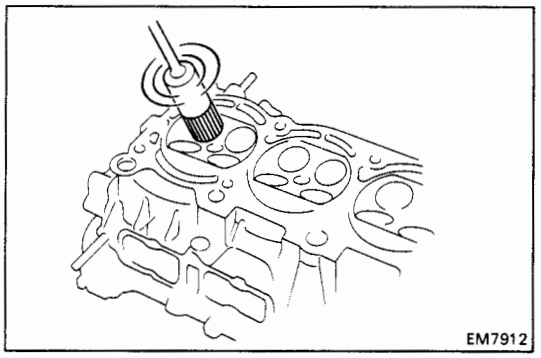

B. Clean combustion chambers

Using a wire brush, remove all the carbon from the combustion chambers.

NOTICE: Be careful not to scratch the cylinder block contact surface.

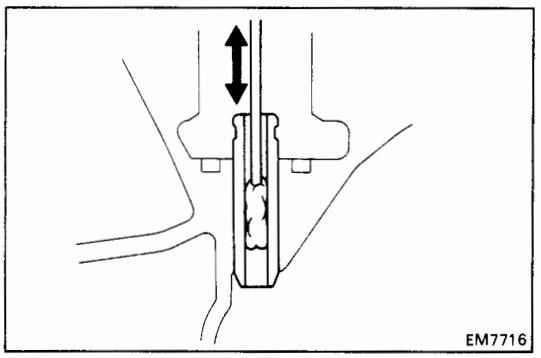

C. Clean valve guide bushings

Using a valve guide bushing brush and solvent, clean all the guide bushings.

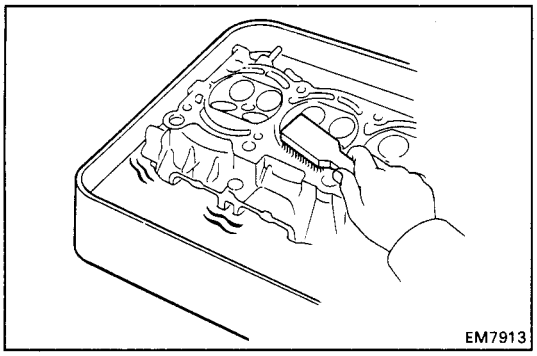

D. Clean cylinder head

Using a soft brush and solvent, thoroughly clean the cylinder head.

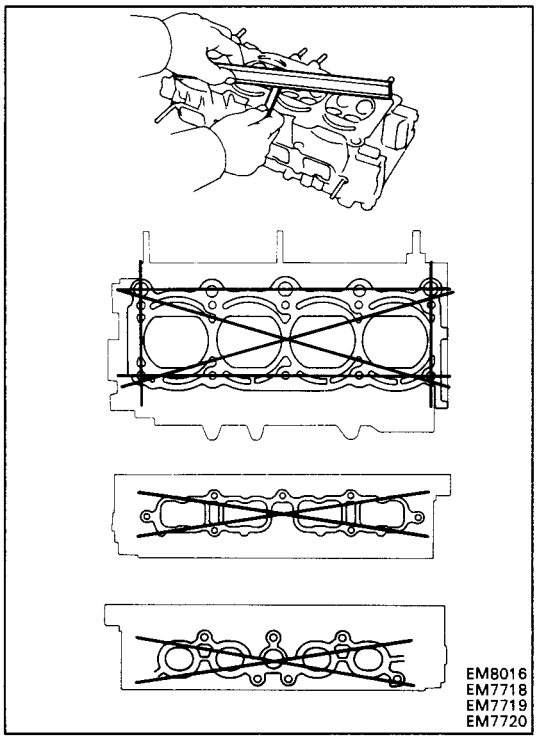

3. INSPECT CYLINDER HEAD

A. Inspect for flatness

Using precision straight edge and feeler gauge, measure the surfaces contacting the cylinder block, T-VIS valve and exhaust manifold for warpage.

Maximum warpage:

Cylinder block side	**0.20 mm (0.0079 in.)**
T-VIS valve side	**0.20 mm (0.0079 in.)**
Exhaust manifold side	**0.30 mm (0.0118 in.)**

If warpage is greater than maximum, replace the cylinder head.

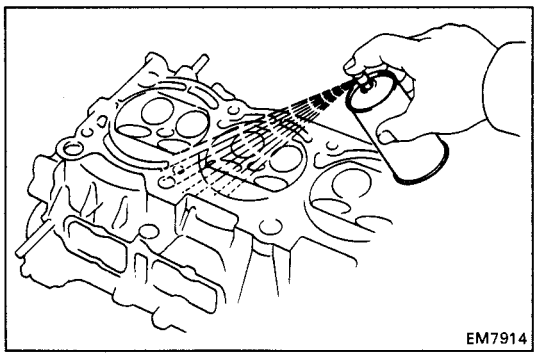

B. Inspect for cracks

Using a dye penetrant, check the combustion chamber, intake ports, exhaust ports and cylinder block surface for cracks.

If cracked, replace the cylinder head.

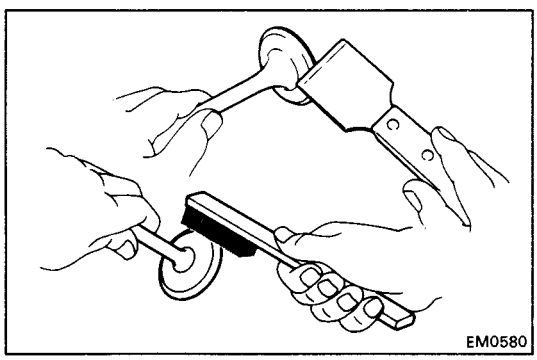

4. CLEAN VALVES

(a) Using a gasket scraper, chip off any carbon from the valve head.

(b) Using a wire brush, thoroughly clean the valve.

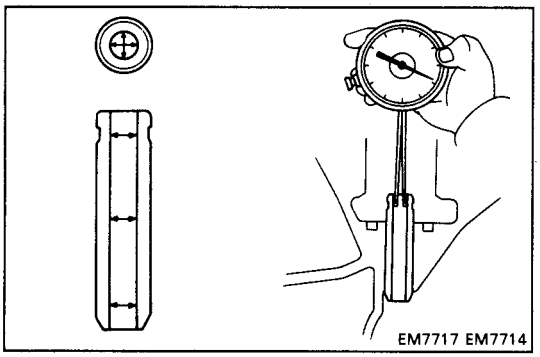

5. INSPECT VALVE STEMS AND GUIDE BUSHINGS

(a) Using a caliper gauge, measure the inside diameter of the guide bushing.

Bushing inside diameter:
6.000 – 6.018 mm (0.2362 – 0.2369 in.)

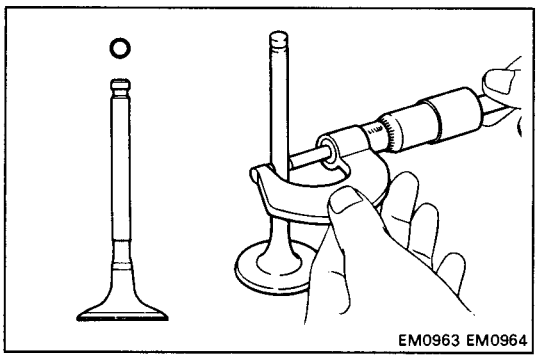

(b) Using a micrometer, measure the diameter of the valve stem.

Valve stem diameter:

Intake	**5.960 – 5.975 mm (0.2346 – 0.2352 in.)**
Exhaust	**5.955 – 5.970 mm (0.2344 – 0.2350 in.)**

(c) Subtract the valve stem diameter measurement from the guide bushing inside diameter measurement.

Standard oil clearance:

Intake	**0.025 – 0.058 mm (0.0010 – 0.0023 in.)**
Exhaust	**0.030 – 0.063 mm (0.0012 – 0.0025 in.)**

Maximum oil clearance:

Intake	**0.08 mm (0.0031 in.)**
Exhaust	**0.10 mm (0.0039 in.)**

If the clearance is greater than maximum, replace the valve and guide bushing.

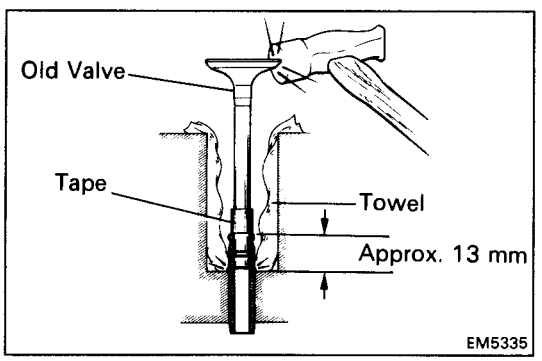

6. IF NECESSARY, REPLACE VALVE GUIDE BUSHINGS

(a) (w/ Snap Ring)
Insert an old valve wrapped with tape into the valve guide bushing, and break off the valve guide bushing by hitting it with a hammer. Remove the snap ring.

HINT: Wrap the tape approx. 13 mm (0.51 in.) from the valve stem end.

NOTICE: Be careful not to damage the valve lifter hole.

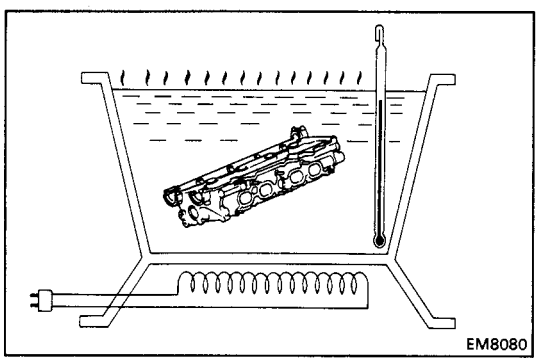

(b) Gradually heat the cylinder head to 80 – 100°C (176 – 212°F).

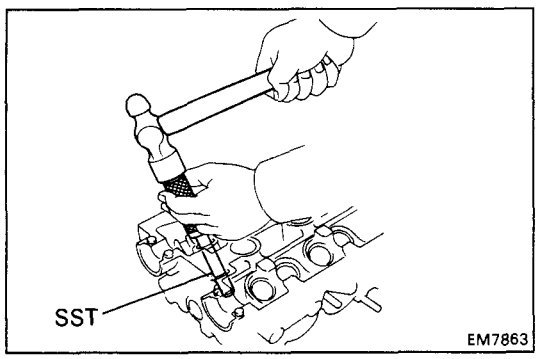

(c) Using SST and a hammer, tap out the guide bushing.

SST 09201-70010

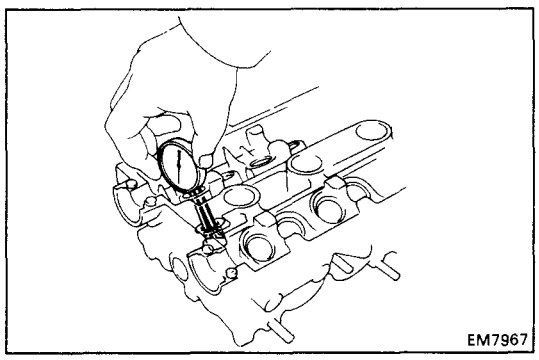

(d) Using a caliper gauge, measure the bushing bore diameter of the cylinder head.

Both intake and exhaust

Bushing bore diameter mm(in.)	Bushing size
10.988 – 11.006 (0.4326 – 0.4333)	Use STD
11.038 – 11.056 (0.4346 – 0.4353)	Use O/S 0.05

(e) Select a new guide bushing (STD size or O/S 0.05).

If the bushing bore diameter of the cylinder head is greater than 11.006 mm (0.4333 in.), machine the bushing bore to the following dimension:

11.038 – 11.056 mm (0.4346 – 0.4353 in.)

If the bushing bore diameter of the cylinder head is greater than 11.056 mm (0.4353 in.), replace the cylinder head.

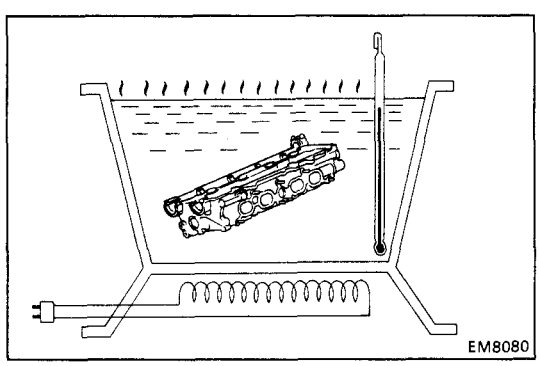

(f) Gradually heat the cylinder head to 80 – 100°C (176 – 212°F).

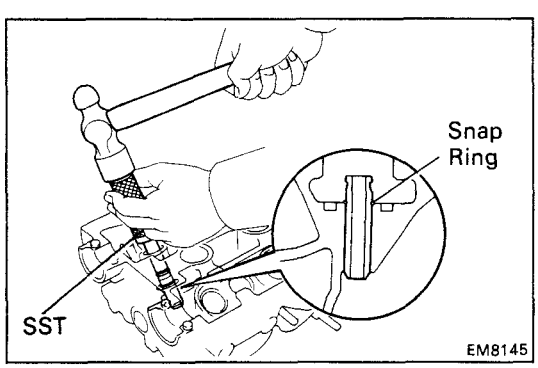

(g) Using SST and a hammer, tap in a new guide bushing until the snap ring makes contact with the cylinder head.

SST 09201-70010

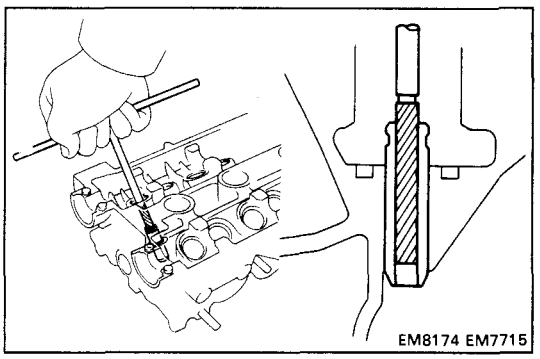

(h) Using a sharp 6 mm reamer, ream the guide bushing to obtain the standard specified clearance (See page EM-75) between the guide bushing and valve stem.

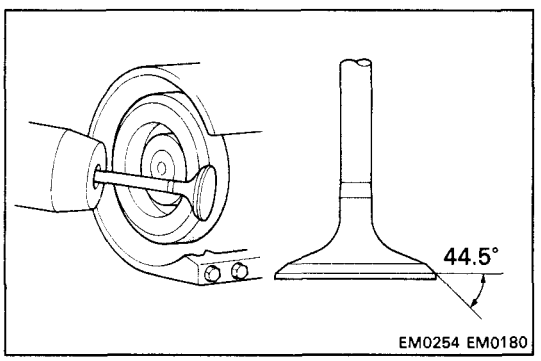

7. INSPECT AND GRIND VALVES

(a) Grind the valve enough to remove pits and carbon.

(b) Check that the valve is ground to the correct valve face angle.

Valve face angle: 44.5°

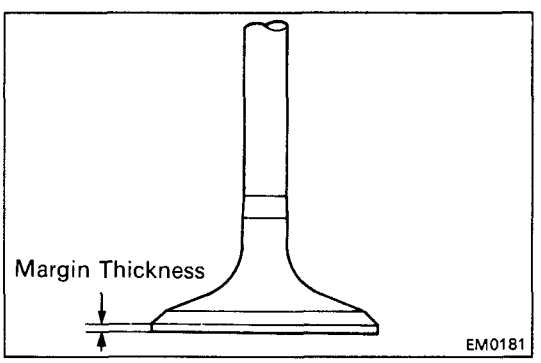

(c) Check the valve head margin thickness.

Standard margin thickness: 0.8 – 1.2 mm (0.031 – 0.047 in.)

Minimum margin thickness: 0.5 mm (0.020 in.)

If the margin thickness is less than minimum, replace the valve.

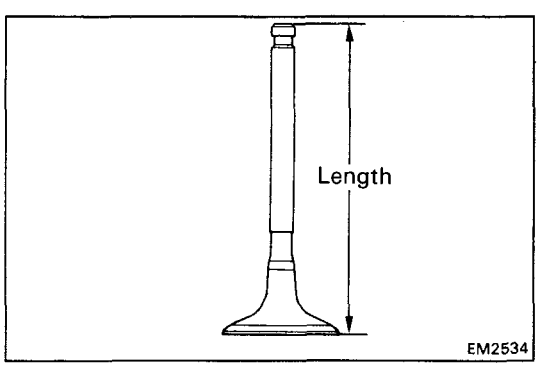

(d) Check the valve overall length.

Standard overall length:
Intake 105.50 mm (4.1535 in.)
Exhaust 99.55 mm (3.9193 in.)

Minimum overall length:
Intake 104.80 mm (4.1260 in.)
Exhaust 98.85 mm (3.8917 in.)

If the overall length is less than minimum, replace the valve.

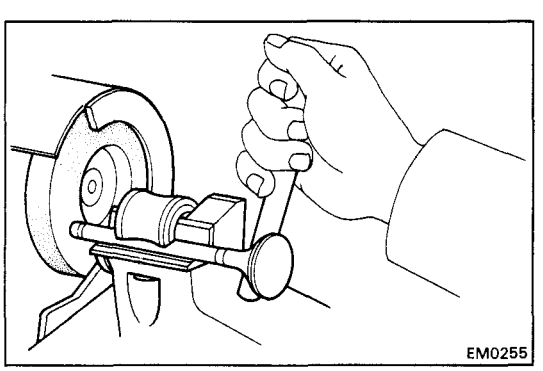

(e) Check the surface of the valve stem tip for wear.

If the valve stem tip is worn, resurface the tip with a grinder or replace the valve.

NOTICE: Do not grind off more than the minimum.

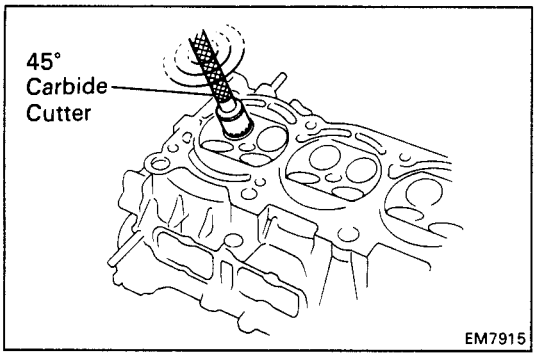

8. INSPECT AND CLEAN VALVE SEATS

(a) Using a 45° carbide cutter, resurface the valve seats. Remove only enough metal to clean the seats.

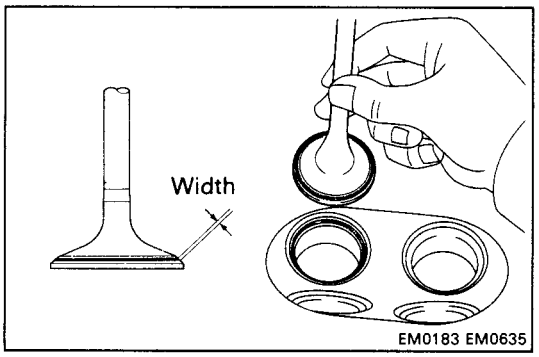

(b) Check the valve seating position.

Apply a thin coat of prussion blue (or white lead) to the valve face. Lightly press the valve against the seat. Do not rotate the valve.

(c) Check the valve face and seat for the following:

- If blue appears 360° around the face, the valve is concentric. If not, replace the valve.
- If blue appears 360° around the valve seat, the guide and face are concentric. If not, resurface the seat.
- Check that the seat contact is in the middle of the valve face with the following width:

1.0 – 1.4 mm (0.039 – 0.055 in.)

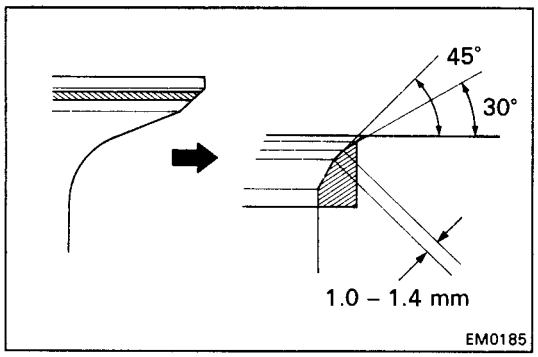

If not, correct the valve seats as follows:

(1) If the seating is too high on the valve face, use 30° and 45° cutters to correct the seat.

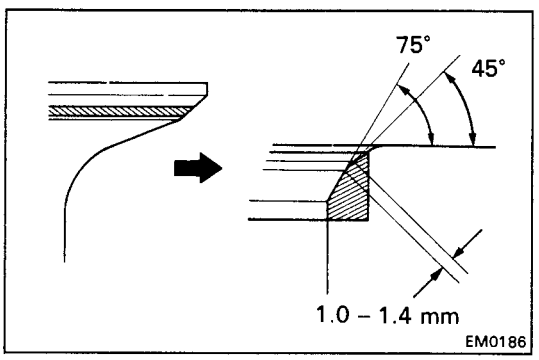

(2) If the seating is too low on the valve face, use 75° and 45° cutters to correct the seat.

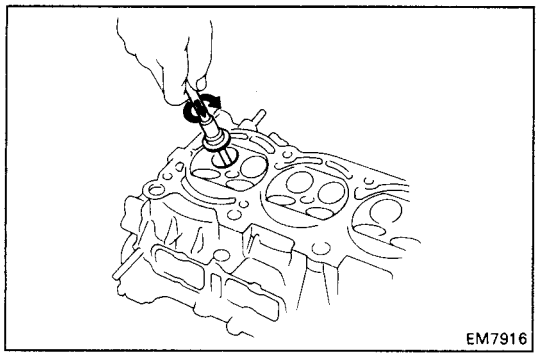

(d) Hand-lap the valve and valve seat with an abrasive compound.

(e) After hand-lapping, clean the valve and valve seat.

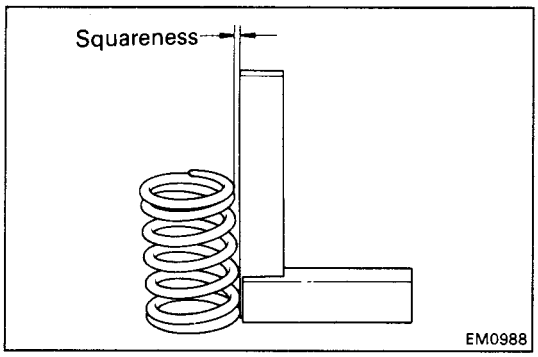

9. INSPECT VALVE SPRINGS

(a) Using a steel square, measure the squareness of the valve spring.

Maximum squareness: 2.0 mm (0.079 in.)

If squareness is greater than maximum, replace the valve spring.

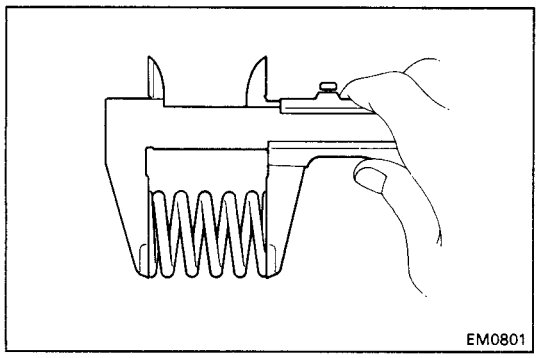

(b) Using vernier calipers, measure the free length of the valve spring.

Free length: 44.43 mm (1.7492 in.)

If the free length is not as specified, replace the valve spring.

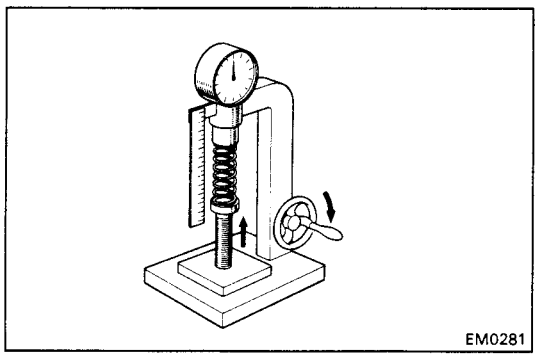

(c) Using a spring tester, measure the tension of the valve spring at the specified installed length.

Installed tension:
20.5 – 24.1 kg (45.2 – 53.1 lb, 201 – 236 N)
at 34.4 mm (1.354 in.)

If the installed tension is not as specified, replace the valve spring.

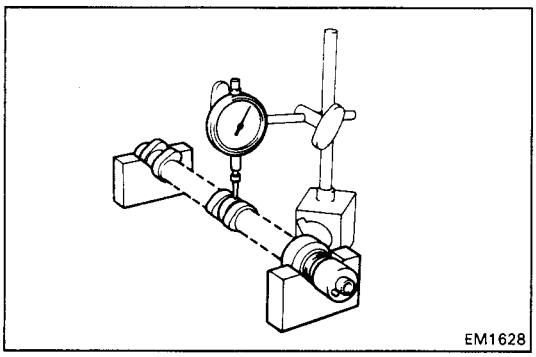

10. INSPECT CAMSHAFTS AND BEARINGS

A. Inspect camshaft for runout

(a) Place the camshaft on V-blocks.

(b) Using a dial indicator, measure the circle runout at the center journal.

Maximum circle runout: 0.06 mm (0.0024 in.)

If the circle runout is greater than maximum, replace the camshaft.

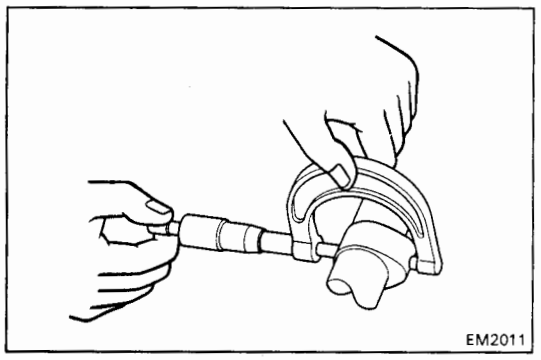

B. Inspect cam lobes

Using a micrometer, measure the cam lobe height.

Standard cam lobe height: 41.010 – 41.110 mm (1.6146 – 1.6185 in.)

Minimum cam lobe height: 39.90 mm (1.5709 in.)

If the cam lobe height is greater than minimum, replace the camshaft.

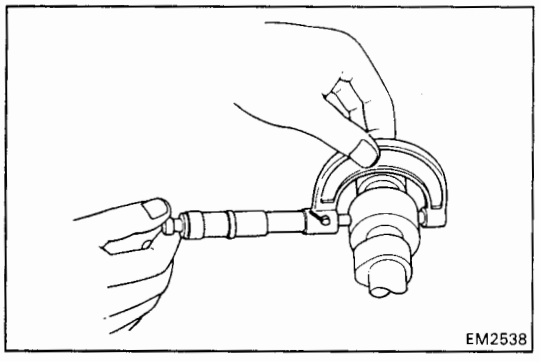

C. Inspect camshaft journals

Using a micrometer, measure the journal diameter.

Journal diameter: 26.959 – 26.975 mm (1.0614 – 1.0620 in.)

If the journal diameter is not as specified, check the oil clearance.

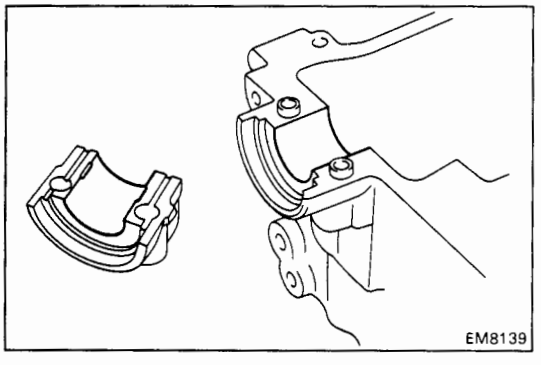

D. Inspect camshaft bearings

Check the bearings for flaking and scoring.

If the bearings are damaged, replace the bearing caps and cylinder head as a set.

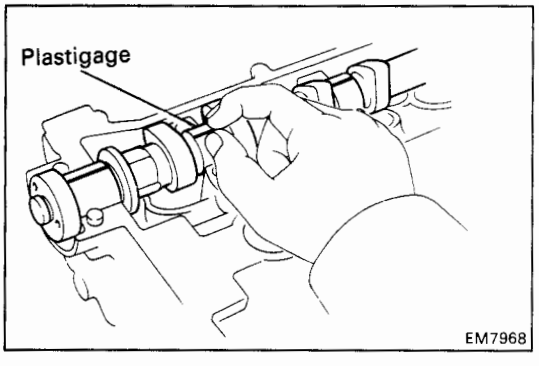

E. Inspect camshaft journal oil clearance

(a) Clean the bearing caps and camshaft journals.

(b) Place the camshafts on the cylinder head.

(c) Lay a strip of Plastigage across each of the camshaft journals.

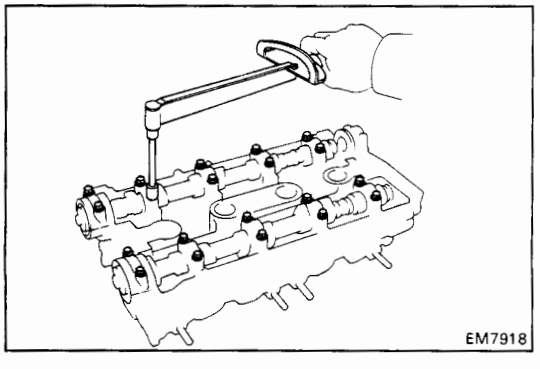

(d) Install the bearing caps.
(See step 2 on page EM-87)

Torque: 190 kg-cm (14 ft-lb, 19 N·m)

NOTICE: Do not turn the camshaft.

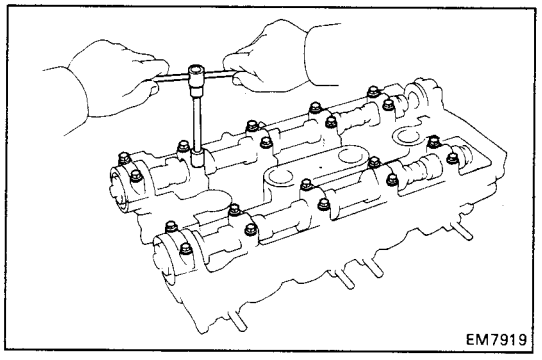

(e) Remove the bearing caps.

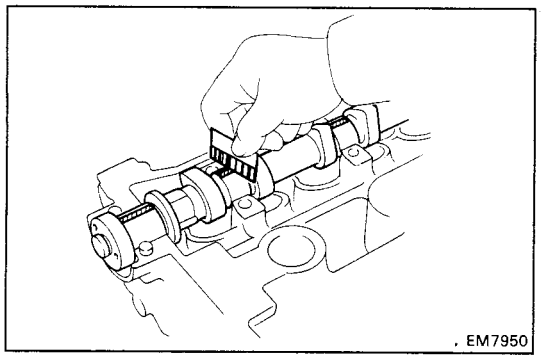

(f) Measure the Plastigage at its widest point.

Standard oil clearance: 0.025 – 0.062 mm (0.0010 – 0.0024 in.)

Maximum oil clearance: 0.08 mm (0.0031 in.)

If the oil clearance is greater than maximum, replace the camshaft. If necessary, replace the bearing caps and cylinder head as a set.

(g) Completely remove the Plastigage.

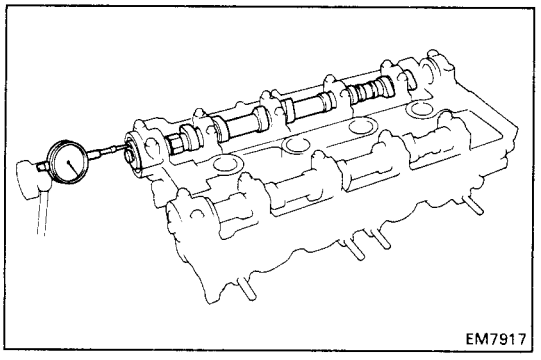

F. Inspect camshaft thrust clearance

(a) Install the camshafts.
(See step 2 on page EM-87)

(b) Using a dial indicator, measure the thrust clearance while moving the camshaft back and forth.

Standard thrust clearance: 0.120 – 0.240 mm (0.0047 – 0.0094 in.)

Maximum thrust clearance: 0.30 mm (0.0118 in.)

If the thrust clearance is greater than maximum, replace the camshaft. If necessary, replace the bearing caps and cylinder head as a set.

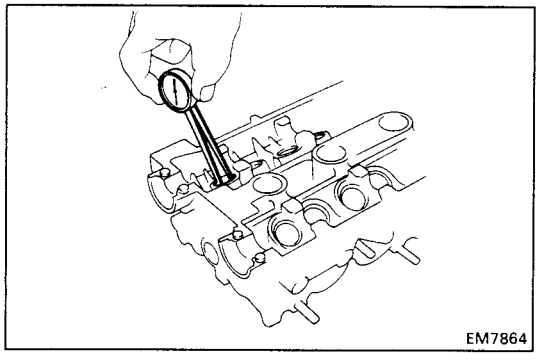

11. INSPECT VALVE LIFTERS AND LIFTER BORES

(a) Using a caliper gauge, measure the lifter bore diameter of the cylinder head.

Lifter bore diameter: 28.000 – 28.021 mm (1.1024 – 1.1032 in.)

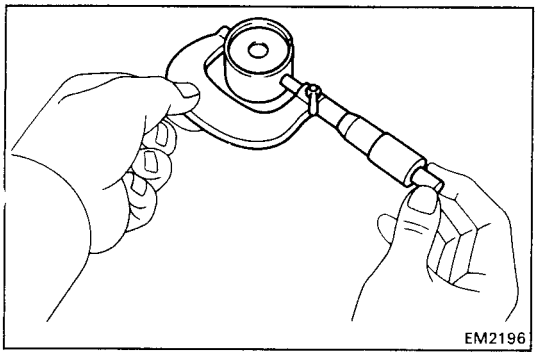

(b) Using a micrometer, measure the lifter diameter.

Lifter diameter: 27.975 – 27.985 mm (1.1014 – 1.1018 in.)

(c) Subtract the lifter diameter measurement from the lifter bore diameter measurement.

Standard oil clearance: 0.015 – 0.046 mm (0.0005 – 0.0018 in.)

Maximum oil clearance: 0.07 mm (0.0028 in.)

If the oil clearance is greater than maximum, replace the lifter. If necessary, replace the cylinder head.

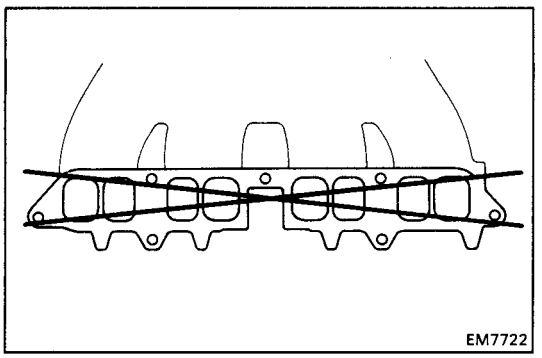

12. INSPECT INTAKE AND EXHAUST MANIFOLDS

(Intake manifold)

Using precision straight edge and feeler gauge, measure the surface contacting the T-VIS valve for warpage.

Maximum warpage: 0.20 mm (0.0079 in.)

If warpage is greater than maximum, replace the intake manifold.

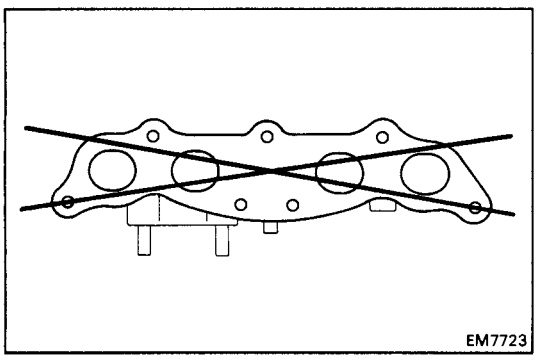

(Exhaust manifold)

Using precision straight edge and feeler gauge, measure the surface contacting the cylinder head for warpage.

Maximum warpage: 0.20 mm (0.0079 in.)

If warpage is greater than maximum, replace the exhaust manifold.

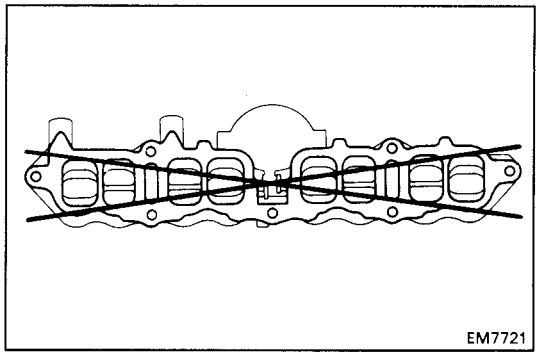

INSPECTION OF TOYOTA – VARIABLE INDUCTION SYSTEM (T- VIS) COMPONENTS

1. INSPECT T-VIS VALVE

A. Inspect for flatness

Using precision straight edge and feeler gauge, measure the surfaces contacting the cylinder head and intake manifold for warpage.

Maximum warpage: 0.20 mm (0.0079 in.)

If warpage is greater than maximum, replace the T-VIS valve.

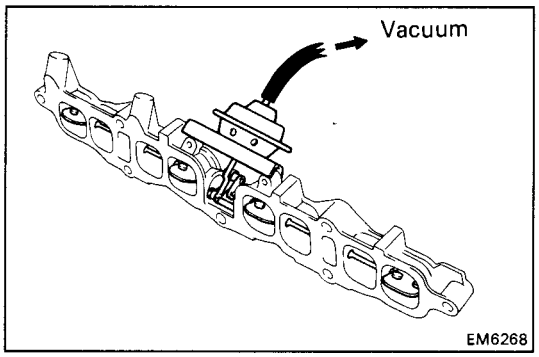

B. Inspect for operation

(a) With 400 mmhg (15.75 in.Hg, 53.3 kPa) of vacuum applied to the actuator, check that the control valve moves smoothly to the fully closed position.

(b) With the vacuum released, check that the control valve fully opens quickly.

If operation is not as specified, replace the T-VIS valve.

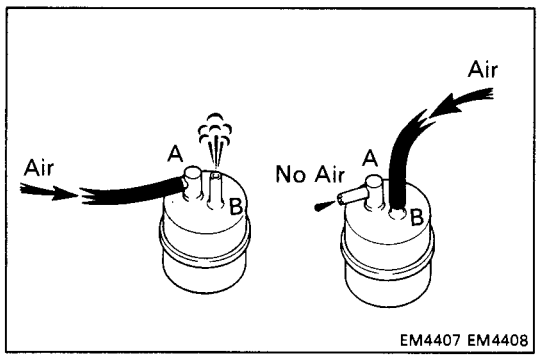

2. INSPECT VACUUM TANK

(a) Check that air flows from ports A to B.

(b) Check that air does not flow from ports B to A.

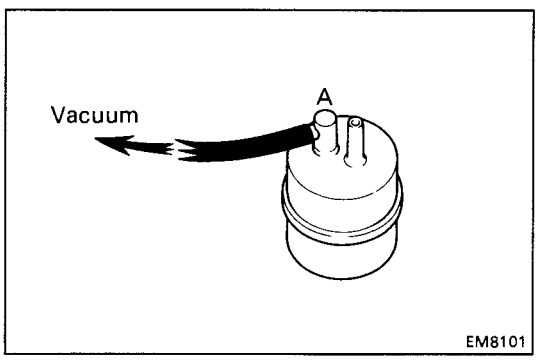

(c) Apply 500 mmHg (19.69 ib.Hg, 66.7 kPa) of vacuum to port A, and check hat there is no change in vacuum after one minuite.

If operation is not as specified, replace the vacuum tank.

3. INSPECT T-VIS VSV (See page FI-163)

ASSEMBLY OF CYLINDER HEAD

(See pages EM-61 and 62)

HINT:
- Thoroughly clean all parts to be assembled.
- Before installing the parts, apply new engine oil to all sliding and rotating surfaces.
- Replace all gaskets and oil seals with new ones.

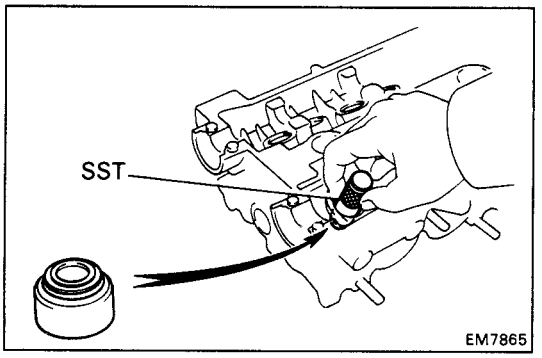

1. INSTALL VALVES

(a) Using SST, push in a new oil seal.

SST 09201-41020

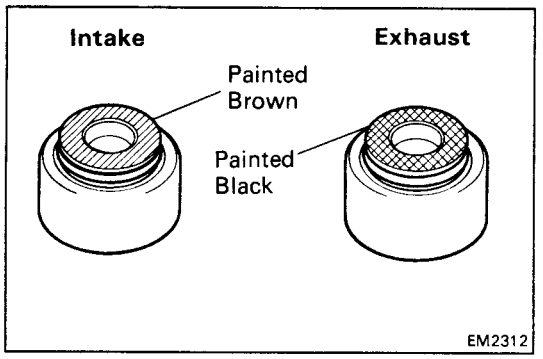

HINT: The intake valve oil seal is brown and the exhaust valve oil seal is black.

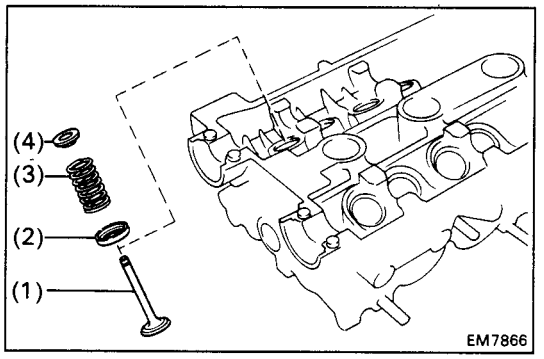

(b) Install the following parts:
  (1) Valve
  (2) Spring seat
  (3) Valve spring
  (4) Spring retainer

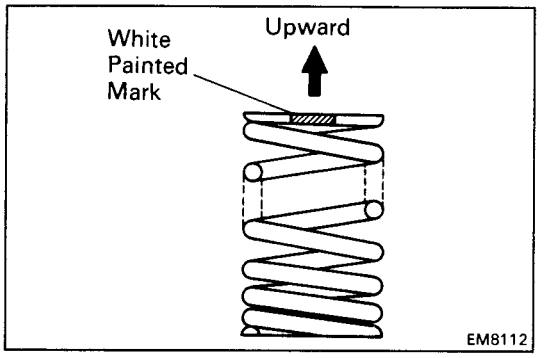

HINT: Install the valve spring, facing the white painted mark upward.

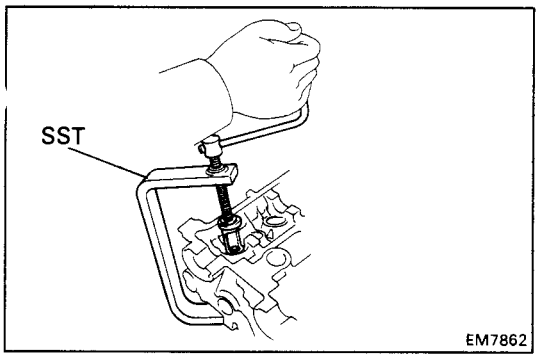

(c) Using SST, compress the valve spring and place the two keepers around the valve stem.

SST 09202-70010

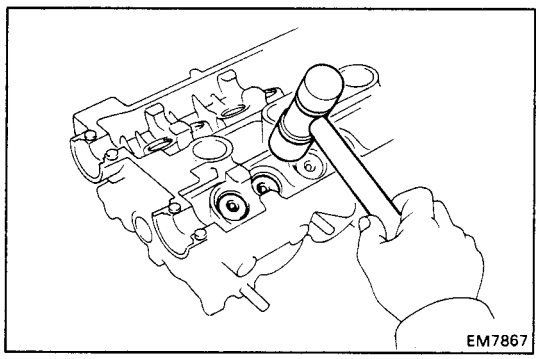

(d) Using a plastic-faced hammer, lightly tap the valve stem tip to assure proper fit.

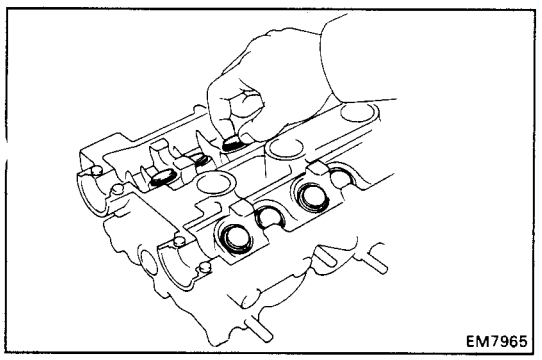

2. INSTALL VALVE LIFTERS AND SHIMS

(a) Install the valve lifter and shim.

(b) Check that the valve lifter rotates smoothly by hand.

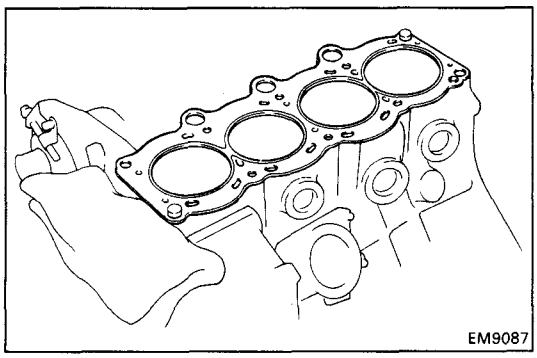

INSTALLATION OF CYLINDER HEAD

(See pages EM-61 and 62)

1. INSTALL CYLINDER HEAD

A. Place cylinder head on cylinder block

(a) Place a new cylinder head gasket in position on the cylinder block.

NOTICE: Be careful of the installation direction.

(b) Place the cylinder head in position on the cylinder head gasket.

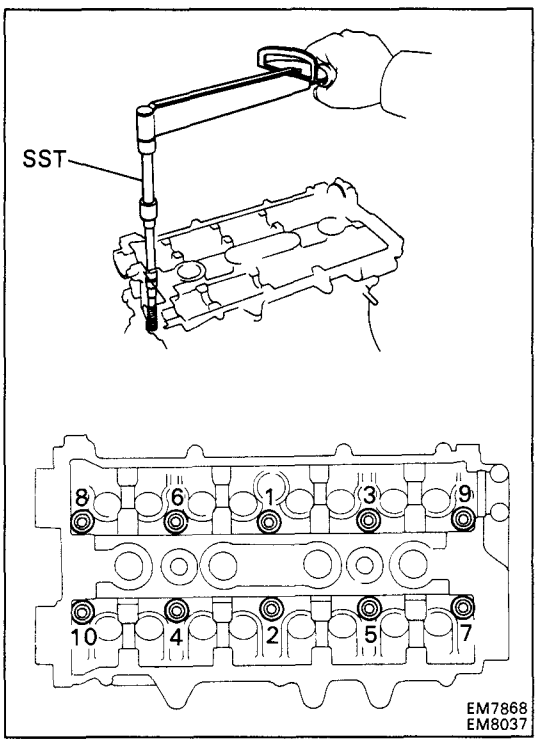

B. Install cylinder head bolts

HINT:

- The cylinder head bolts are tightened in two progressive steps (steps (b) and (d)).
- If any cylinder head bolt is broken or deformed, replace it.

(a) Apply a light coat of engine oil on the threads and under the heads of the cylinder head bolts.

(b) Using SST, install and uniformly tighten the ten cylinder head bolts in several passes in the sequence shown.

SST 09043-38100

Torque: 500 kg-cm (36 ft-lb, 49 N·m)

If any one of the cylinder head bolts does not meet the torque specification, replace the cylinder head bolt.

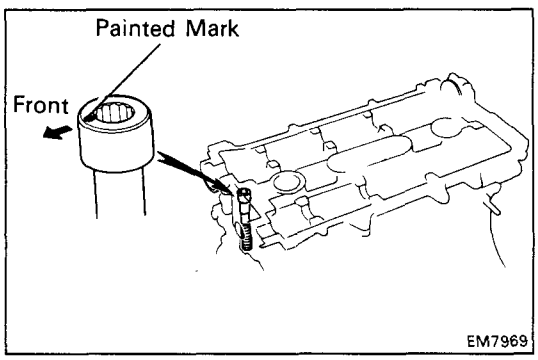

(c) Mark the front of the cylinder head bolt head with paint.

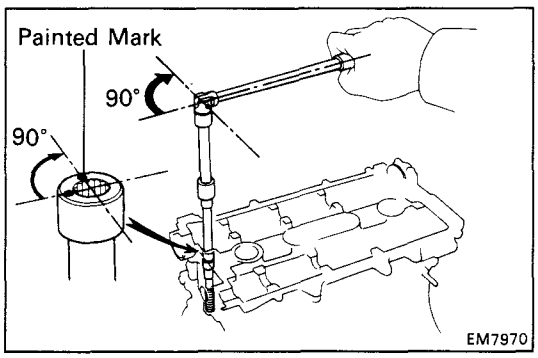

(d) Retighten the cylinder head bolts 90° in the numerical order shown.

(e) Check that the painted mark is now at a 90° angle to front.

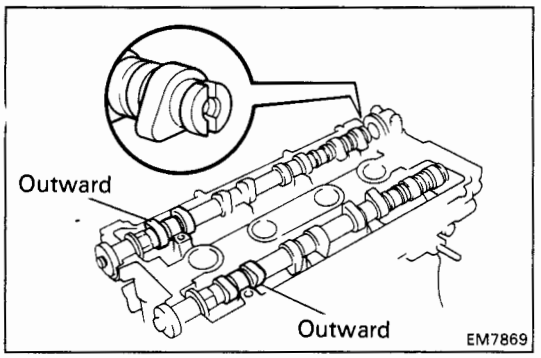

2. INSTALL CAMSHAFTS

(a) Place the camshaft on the cylinder head with the No.1 cam lobe facing outward as shown.

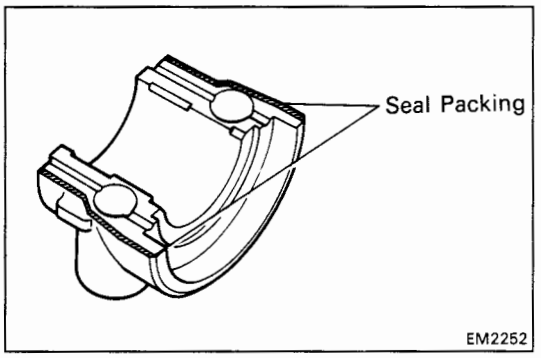

(b) Apply seal packing to the No.1 bearing cap as shown.

Seal packing: Part No. 08826-00080 or equivalent

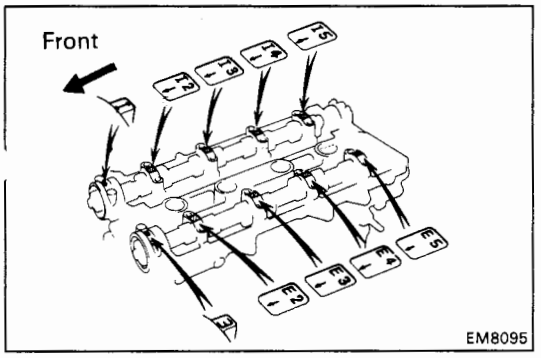

(c) Install the bearing caps in their proper locations.

HINT: Each bearing cap has a number and front mark.

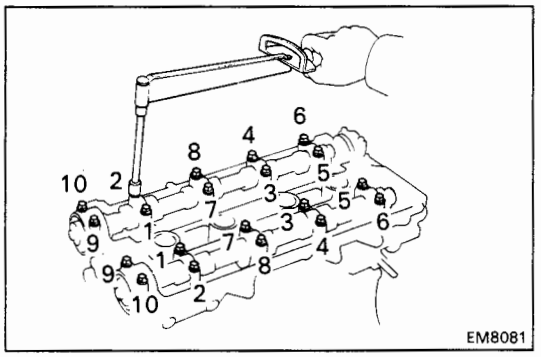

(d) Apply a light coat of engine oil on the threads and under the heads of the bearing cap bolts.

(e) Install and uniformly tighten the ten bearing cap bolts on one side in several passes in the sequence shown.

Torque: 190 kg-cm (14 ft-lb, 19 N·m)

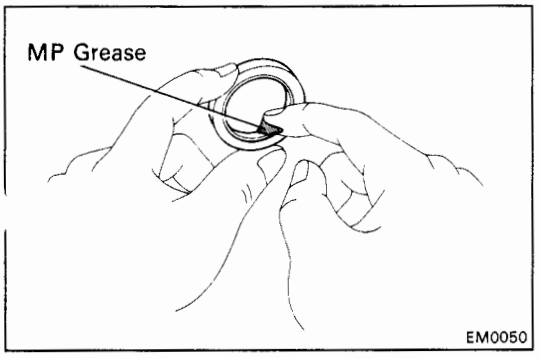

(f) Apply MP grease to a new oil seal lip.

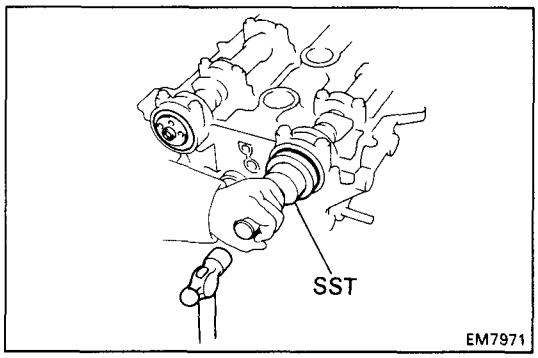

(g) Using SST, tap in the two camshaft oil seals.
SST 09223-50010

3. **ADJUST VALVE CLEARANCE (See page EM-11)**

Turn the camshaft and position the cam lobe upward, check and adjust the valve clearance.

Valve clearance (Cold):

Intake	**0.15 – 0.25 mm (0.006 – 0.010 in.)**
Exhaust	**0.20 – 0.30 mm (0.008 – 0.012 in.)**

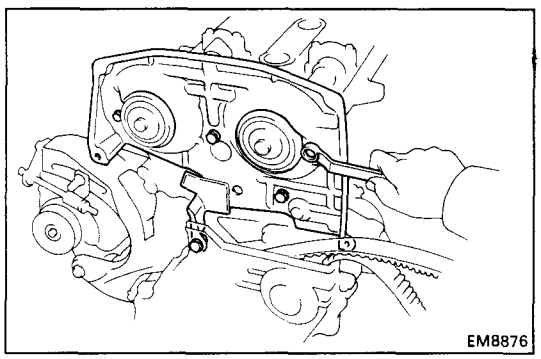

4. **INSTALL NO.3 TIMING BELT COVER**

Install the No.3 belt cover with the five bolts.

Torque: 90 kg-cm (78 in.-lb, 8.8 N·m)

5. **INSTALL NO.1 IDLER PULLEY**
(See step 4 on page EM-35)

6. **INSTALL CAMSHAFT TIMING PULLEYS**
(See steps 9 to 23 on pages EM-36 to 41)

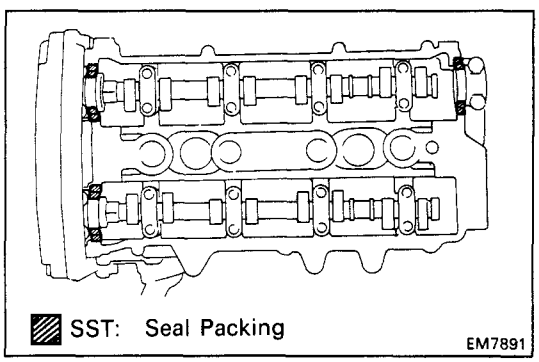

7. **INSTALL CYLINDER HEAD COVER**

(a) Apply seal packing to the cylinder head as shown in the figure.

Seal packing: Part No. 08826-00080 or equivalent

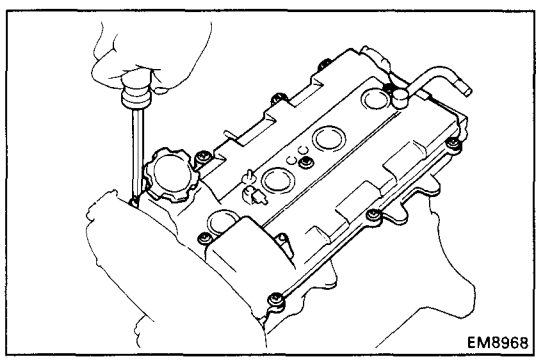

(b) Install the two gaskets to the head cover.

(c) Install the head cover with the twelve seal washers and screws. Uniformly tighten the screw in several passes.

Torque: 25 kg-cm (21 in.-lb, 2.5 N·m)

8. **INSTALL DELIVERY PIPE AND INJECTORS**
(See steps 2 to 5 on pages FI-117 and 118)

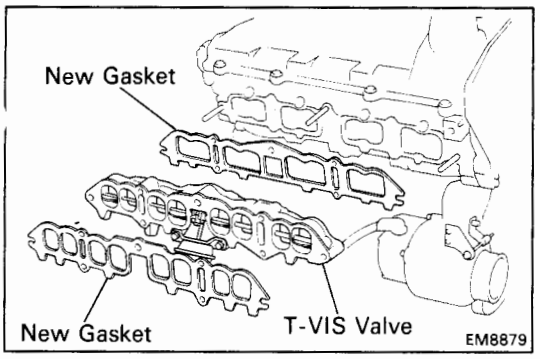

9. INSTALL T-VIS VALVE AND INTAKE MANIFOLD

(a) Place a new gasket, the T-VIS valve and the other new gasket on the cylinder head.

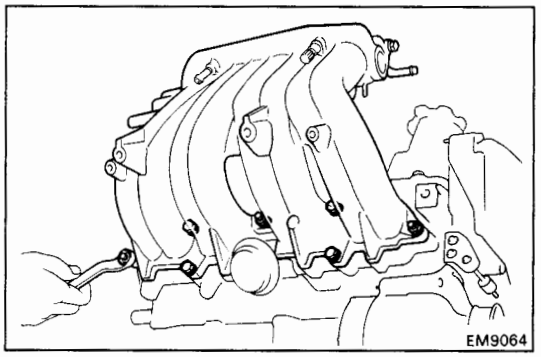

(b) Install the intake manifold with the four bolts and three nuts. Uniformly tighten the bolts and nuts in several passes.

Torque: 195 kg-cm (14 ft-lb, 19 N·m)

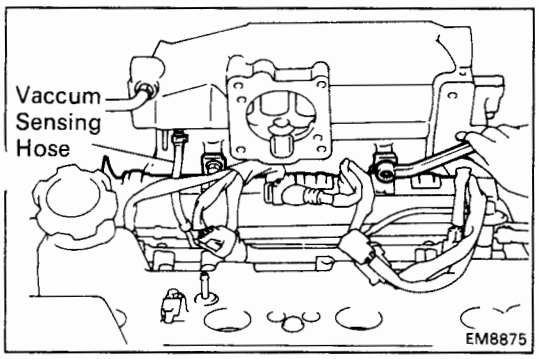

10. INSTALL ENGINE WIRE TO INTAKE MANIFOLD

(a) Install the engine wire clamp to the intake manifold with the two bolts.

(b) Connect the vacuum sensing hose to the intake manifold.

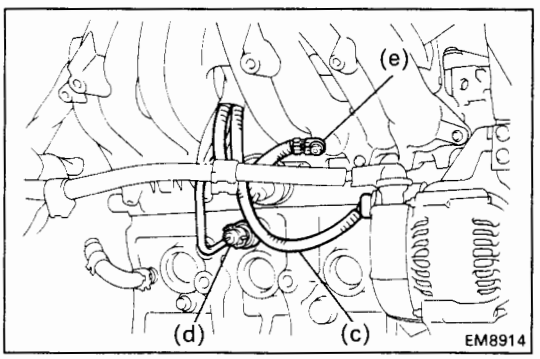

(c) Connect the alternator connector.

(d) Connect the knock sensor connector.

(e) Connect the ground strap with the bolt.

(f) Connect the injector connectors.
(See step 6 on page FI-119)

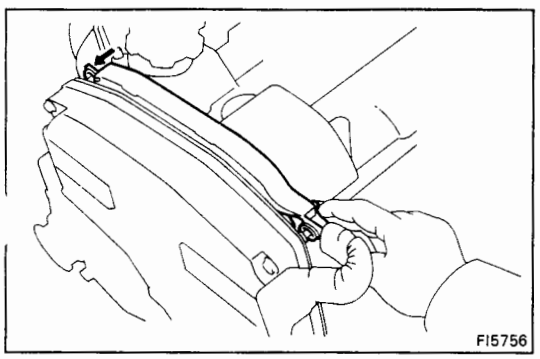

(g) Install the two wire clamps to the mount bolts of the No.2 timing belt cover.

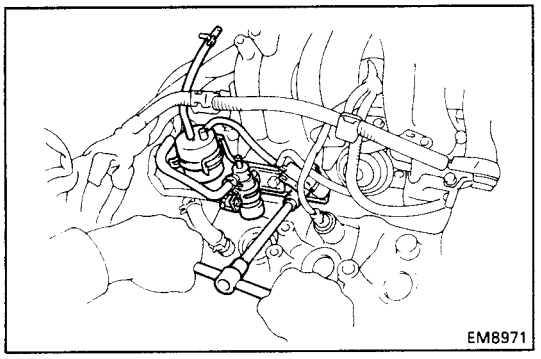

11. INSTALL T-VIS VACUUM TANK, T-VIS VSV, TURBOCHARGING PRESSURE VSV AND BRACKET

(a) Install the T-VIS vacuum tank, T-VIS VSV, turbocharging pressure VSV and bracket assembly with the two bolts.

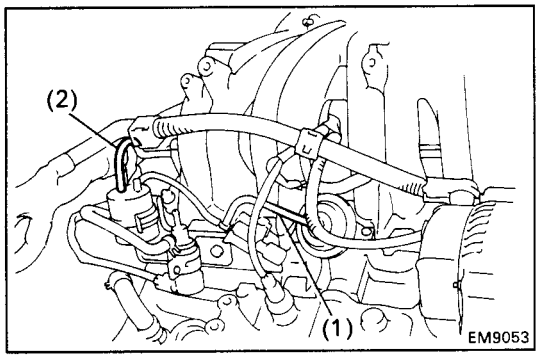

(b) Connect the following hoses:

(1) Vacuum hose (from T-VIS VSV) from T-VIS actuator

(2) Vacuum hose (from T-VIS vacuum tank) from intake manifold

(c) Connect the following connectors:

- T-VIS VSV connector
- Turbocharging pressure VSV connector

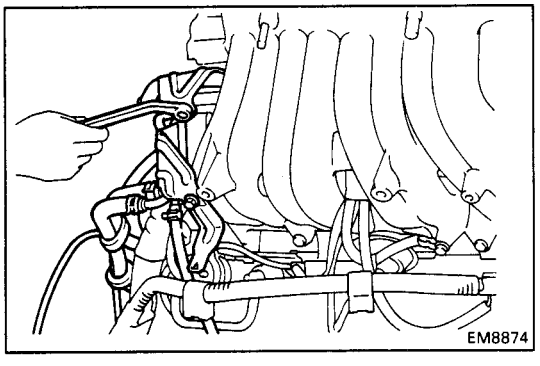

12. INSTALL NO.1 AIR TUBE

(a) Install the air tube and wire bracket with the two bolts.

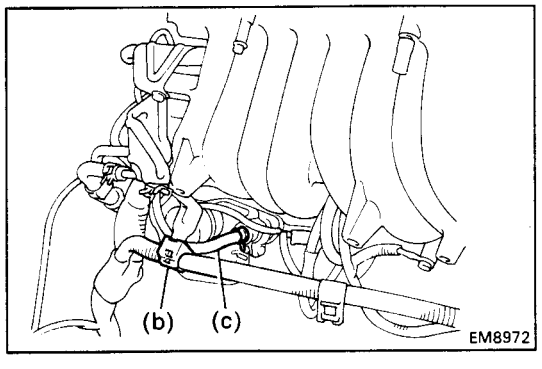

(b) Install the alternator wire clamp to the wire bracket.

(c) Connect the vacuum hose to turbocharging pressure VSV

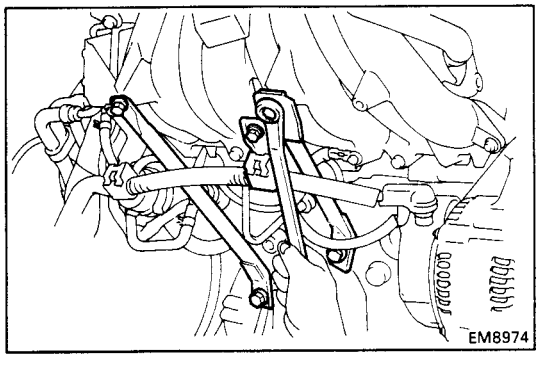

13. INSTALL INTAKE MANIFOLD STAYS

(a) Install the manifold stay with the two bolts. Install the two manifold stays

Torque: 260 kg-cm (19 ft-lb, 25 N·m)

(b) Install the alternator wire clamp to the wire bracket.

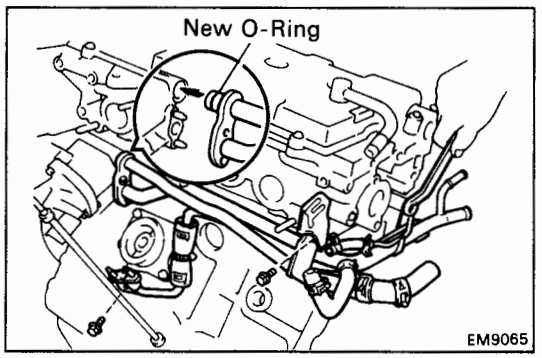

14. INSTALL WATER BY-PASS PIPE

(a) Install a new O-ring to the pipe.

(b) Apply soapy water on the O-ring.

(c) Install a new gasket to the water pump.

(d) Install the water by-pass pipe with the two nuts and two bolts.

Torque (Nuts): 80 kg-cm (69 in.-lb, 7.8 N·m)

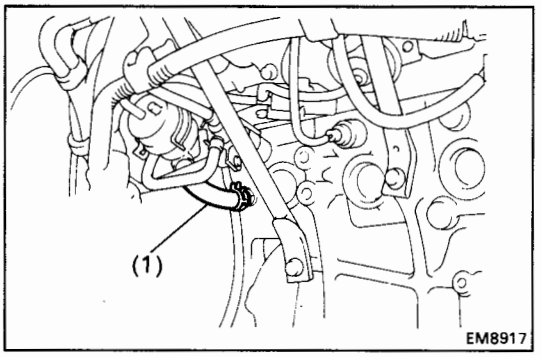

(e) Connect the following hoses:

(1) Water by-pass hose from cylinder block

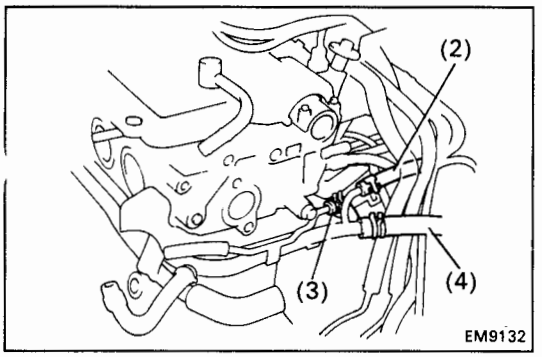

(2) Water by-pass hoses from No.1 air tube

(3) Vacuum hose from turbocharging pressure VSV

(4) Heater water hose

15. INSTALL OIL COOLER
(See steps 2 to 4 on pages LU-21 and 22)

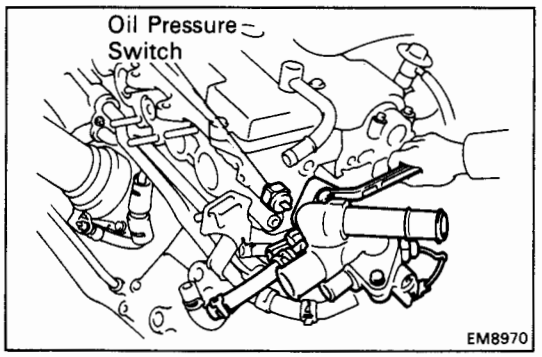

16. INSTALL OIL PRESSURE SWITCH

Apply adhesive to two or three threads.

Adhesive: Part No. 08833-00080, THREE BOND 1324 or equivalent

17. INSTALL WATER OUTLET AND HOUSING

(a) Install a new gasket and the water outlet and housing assembly with the two bolts.

Torque: 400 kg-cm (29 ft-lb, 39 N·m)

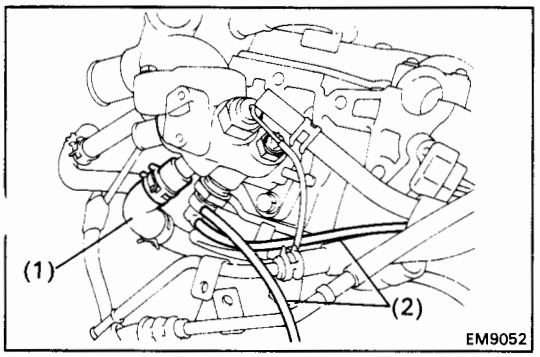

(b) Connect the following hoses:

(1) Water by-pass hose from water by-pass pipe

(2) Two EVAP VSV vacuum hoses

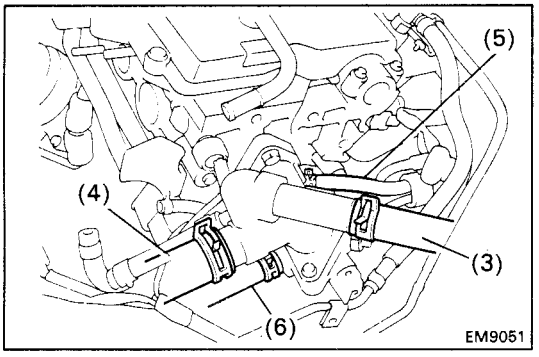

(3) Water filler hose
(4) Radiator hose
(5) Water by-pass pipe hose from ISC valve
(6) Heater water hose

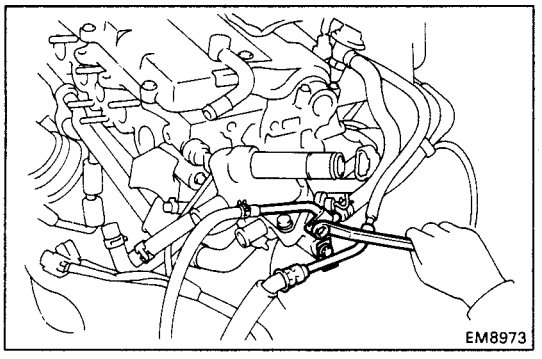

(c) Install the fuel inlet hose with the bolt.
(d) Install the fuel return hose with the bolt.
(e) Connect the following connectors:
- Water temperature sender gauge connector
- Water temperature sensor
- Cold start injector time switch connector

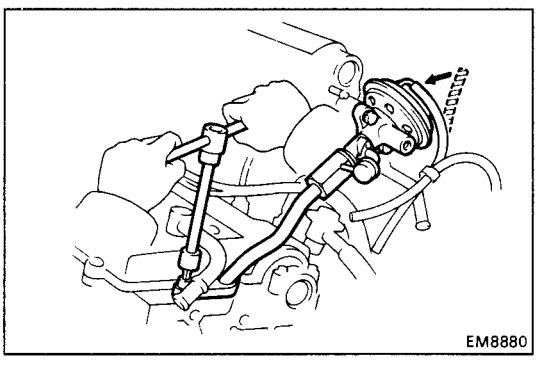

18. INSTALL EGR VALVE AND PIPE

(a) Install two new gaskets, the EGR valve and pipe assembly with the four bolts.

Torque:
Intake manifold side
195 kg-cm (14 ft-lb, 19 N·m)
Cylinder head side
260 kg-cm (19 ft-lb, 25 N·m)

(b) Connect the vacuum hose to the EGR valve.

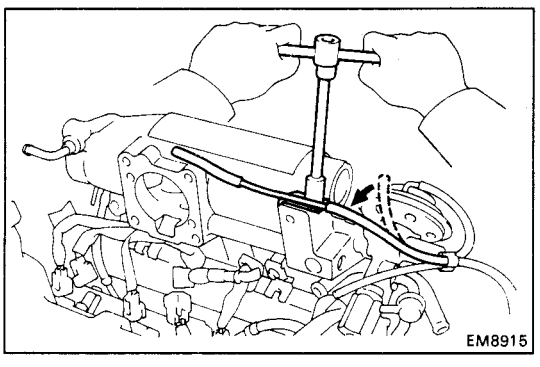

19. INSTALL VACUUM PIPE

(a) Install the vacuum pipe with the bolt.
(b) Connect the vacuum hose to the vacuum pipe.

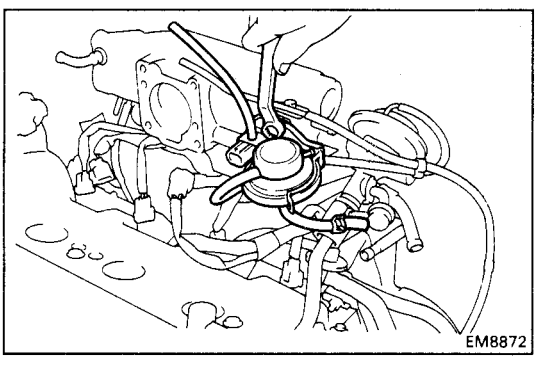

20. INSTALL EGR VACUUM MODULATOR AND VSV

(a) Install the EGR vacuum modulator and VSV assembly with the bolt.

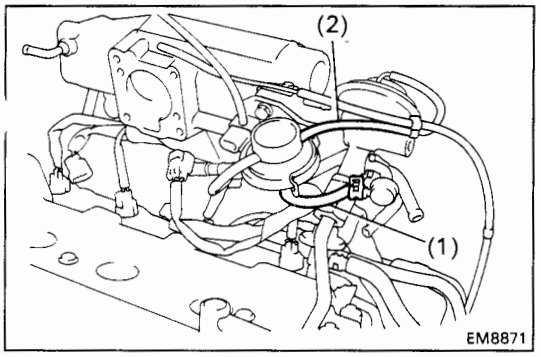

(b) Connect the following hoses:
  (1) Vacuum hose from EGR valve
  (2) Vacuum hose from EGR vacuum modulator
(c) Connect the EGR VSV connector.

21. INSTALL LH ENGINE HANGER

Install the LH engine hanger with the two bolts.

Torque:

12 mm head bolt	**130 kg-cm (9 ft-lb, 13 N·m)**
14 mm head bolt	**195 kg-cm (14 ft-lb, 19 N·m)**

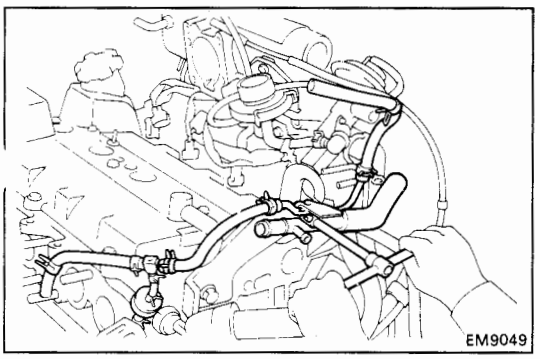

22. INSTALL NO.2 AIR TUBE

(a) Install the No.2 air tube with the bolt.

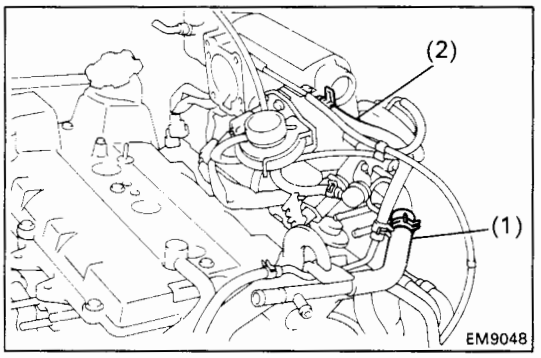

(b) Connect the following hoses:
  (1) Air hose from No.1 air tube
  (2) Air hose from intake manifold

23. INSTALL DISTRIBUTOR
(See steps 1 to 7 on pages IG-16 and 17)

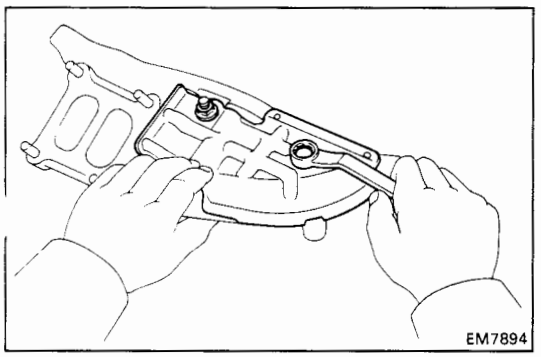

24. INSTALL EXHAUST MANIFOLD

(a) Install the heat insulator with the bolt and nut.

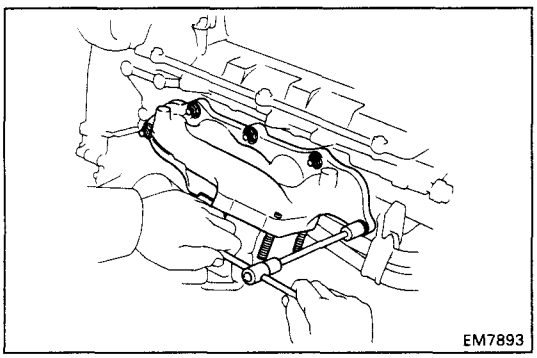

(b) Install a new gasket and the exhaust manifold with the seven nuts. Uniformly tighten the nuts in several passes.

Torque: 530 kg-cm (38 ft-lb, 52 N·m)

25. INSTALL COLD START INJECTOR
(See steps 1 to 3 on page FI-101)

26. INSTALL THROTTLE BODY
(See steps 2, 3 and 4 to 8 on pages FI-138 and 139)

27. INSTALL TURBOCHARGER
(See steps 5 to 11, 17, 18 and 21 on pages TC-16 to 19)

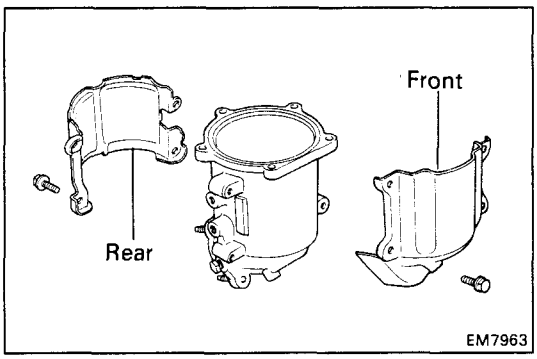

28. INSTALL CATALYTIC CONVERTER

(a) Install the front heat insulator with the five bolts.

(b) Install the rear heat insulator with the four bolts.

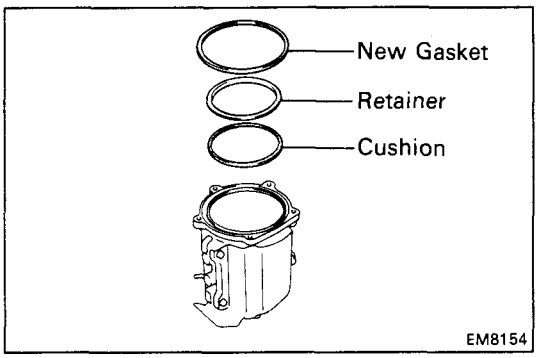

(c) Place the cushion, retainer and a new gasket on the catalytic converter.

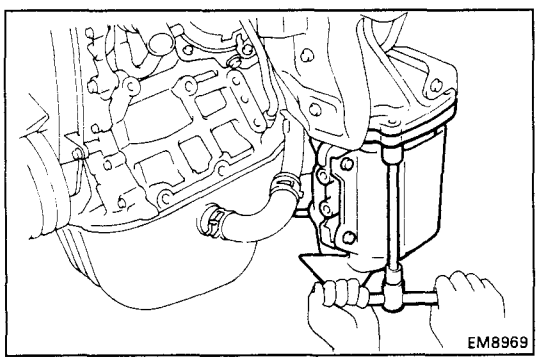

(d) Install the catalytic converter with the three bolts and two nuts.

Torque: 300 kg-cm (22 ft-lb, 29 N·m)

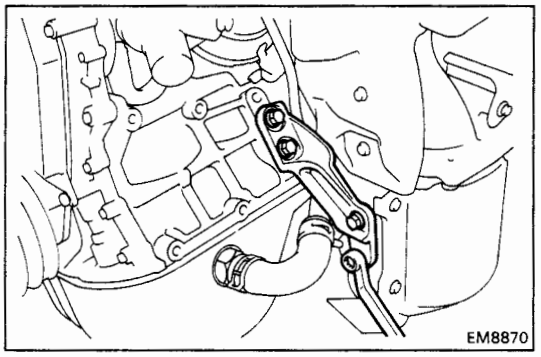

(e) Install the RH converter stay with the four bolts.
Torque: 600 kg-cm (43 ft-lb, 59 N·m)

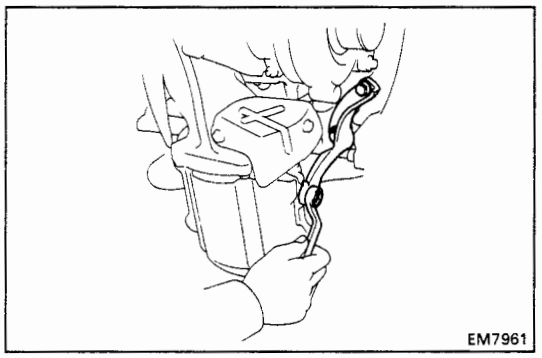

(f) Install the LH converter stay with the three bolts.
Torque: 600 kg-cm (43 ft-lb, 59 N·m)

29. INSTALL FRONT EXHAUST PIPE
(See steps 18 and 19 on pages EM-174 and 175)

30. INSTALL INTERCOOLER
(See steps 2 to 5, 7, 8, 10 and 11 on pages TC-23 to 25)

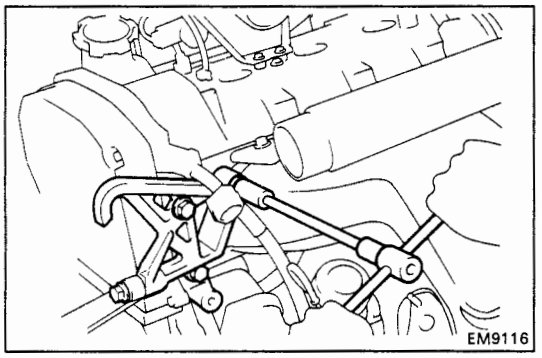

31. INSTALL RH FRONT ENGINE HANGER
Install the engine hanger with the three bolts.
Torque: 400 kg-cm (29 ft-lb, 39 N·m)

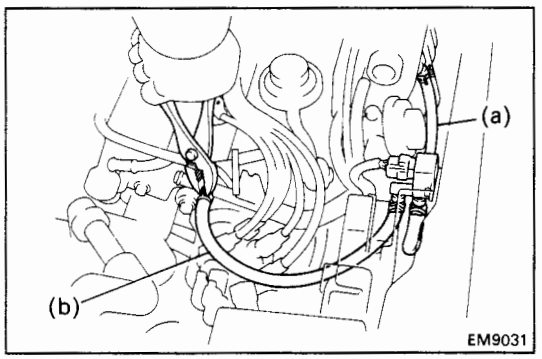

32. CONNECT HOSES
(a) A/C VSV vacuum hose from intake manifold
(b) A/C VSV air hose from No.2 air tube

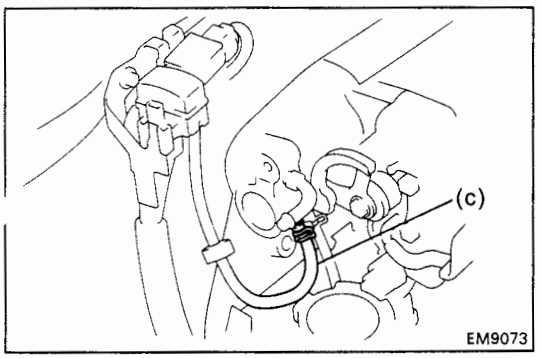

(c) Turbocharging pressure sensor hose from intake manifold

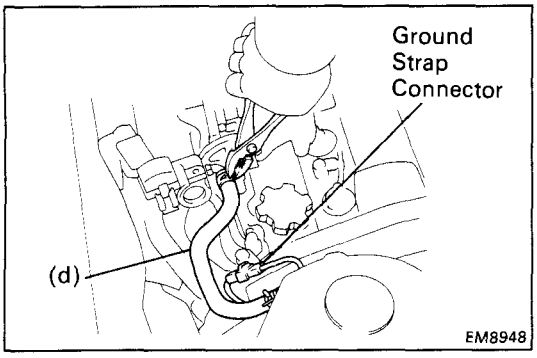

(d) Brake booster vacuum hose from intake manifold

33. CONNECT GROUND STRAP CONNECTOR

34. INSTALL AIR CLEANER CAP
(See step 40 on pages EM-179)

35. INSTALL CRUISE CONTROL ACTUATOR (w/ CRUISE CONTROL SYSTEM) AND ACCELERATOR LINKAGE
(See step 36 on pages EM-178)

36. INSTALL ACCELERATOR CABLE, AND ADJUST IT

37. INSTALL SUSPENSION UPPER BRACE
(See step 41 on page EM-179)

38. FILL ENGINE WITH COOLANT (See page CO-7)

Capacity (w/ Heater):
13.6 liters (14.4 US qts, 12.0 Imp. qts)

39. START ENGINE AND CHECK FOR LEAKS

40. ADJUST IGNITION TIMING
(See steps 9 to 13 on pages IG-17 and 18)

Ignition timing:
10° BTDC] idle
(w/ Terminals TE1 and E1 connected)

41. INSTALL ENGINE HOOD SIDE PANELS

42. INSTALL ENGINE UNDER COVERS

43. PERFORM ROAD TEST

Check for abnormal noise, shock, slippage, correct shift points and smooth operation.

44. RECHECK ENGINE COOLANT AND OIL LEVELS

CYLINDER HEAD (5S-FE)

COMPONENTS

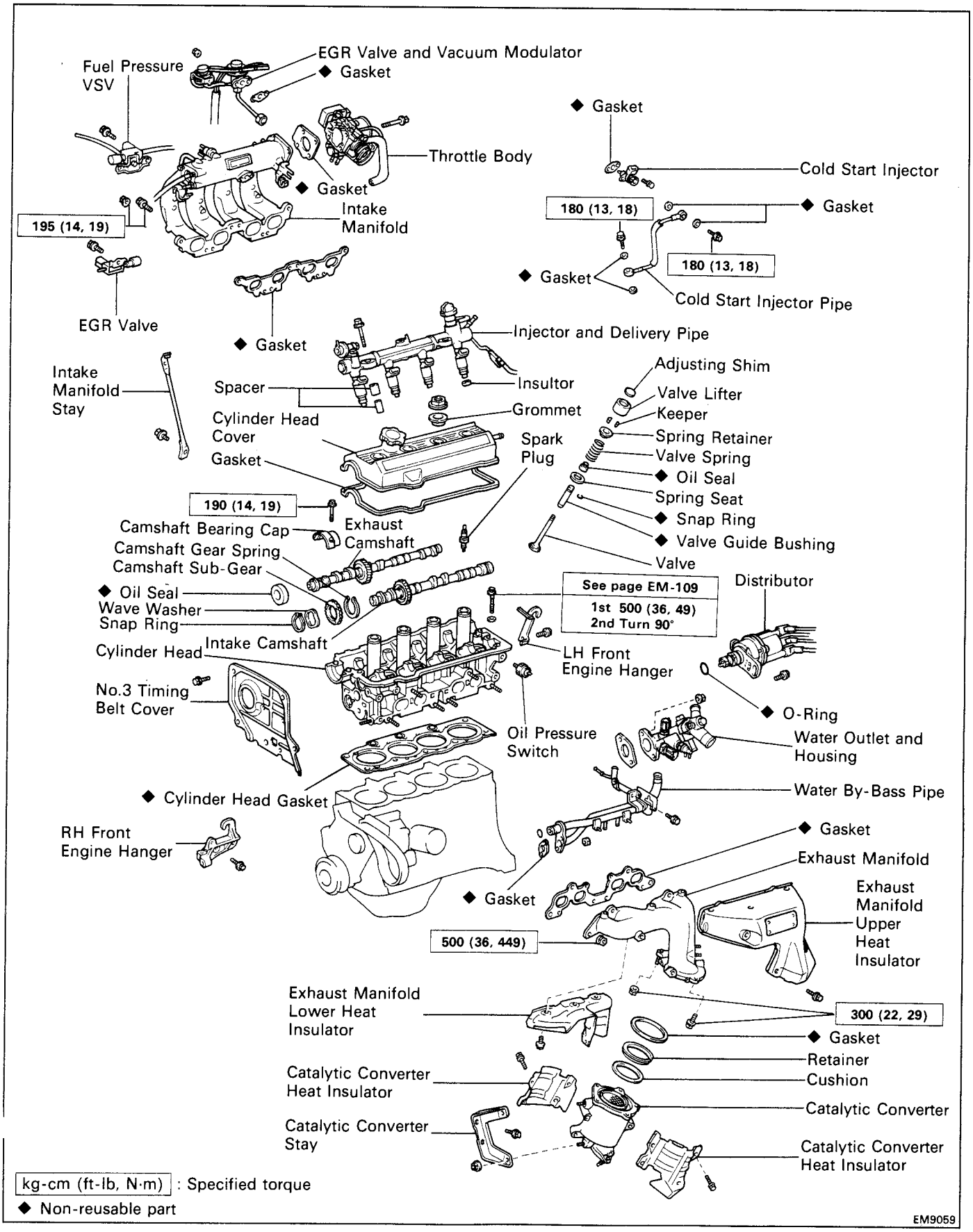

REMOVAL OF CYLINDER HEAD

(See page EM-97)

1. **DISCONNECT CABLE FROM NEGATIVE TERMINAL OF BATTERY**

   CAUTION: Work must be started after approx. 20 seconds or longer from the time the ignition switch is turned to the "LOCK" position and the negative (–) terminal cable is disconnected from the battery.

2. **DRAIN ENGINE COOLANT (See page CO-6)**

3. **REMOVE ENGINE UNDER COVERS**

4. **REMOVE ENGINE HOOD SIDE PANELS**

5. **REMOVE SUSPENSION UPPER BRACE**

6. **(A/T)**
   DISCONNECT THROTTLE CABLE FROM THROTTLE BODY

7. **DISCONNECT ACCELERATOR CABLE FROM THROTTLE BODY**

8. **REMOVE CRUISE CONTROL ACTUATOR (w/ CRUISE CONTROL SYSTEM) AND ACCELERATOR LINKAGE (See step 11 on page EM-182)**

9. **REMOVE AIR CLEANER CAP (See step 9 on page EM-182)**

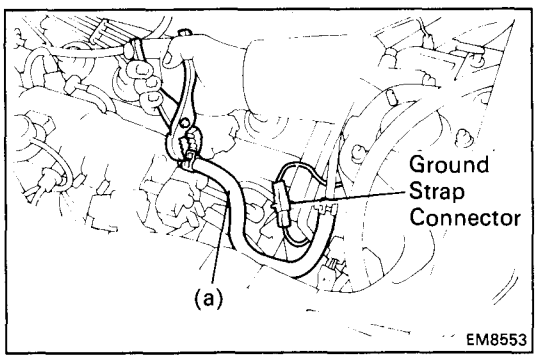

10. **DISCONNECT GROUND STRAP CONNECTOR**

11. **DISCONNECT VACUUM HOSES**
    (a) Brake booster vacuum hose from intake manifold

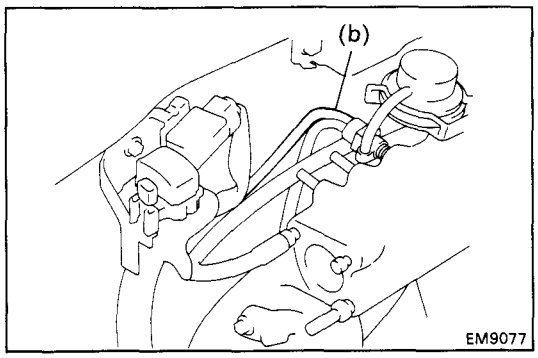

    (b) Vacuum sensor hose from intake manifold

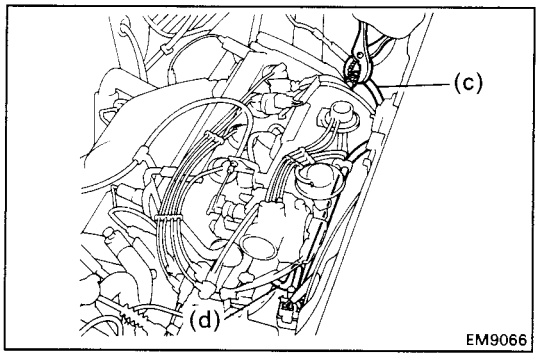

(c) A/C VSV vacuum hose from intake manifold

(d) A/C VSV air hose from ISC valve

12. REMOVE DISTRIBUTOR (See pages IG-19 and 20)

13. REMOVE FRONT EXHAUST PIPE (See step 29 on page EM-187)

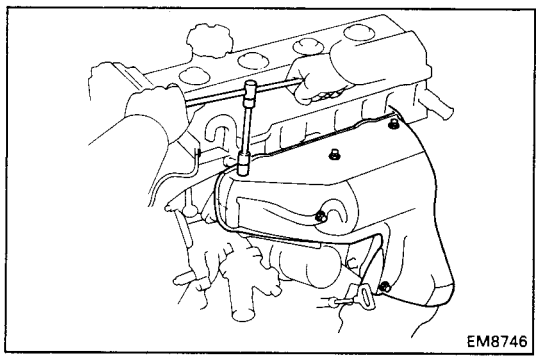

14. REMOVE EXHAUST MANIFOLD AND CATALYTIC CONVERTER ASSEMBLY

(a) Disconnect the oxygen sensor (main) connector.

(b) (CALIF. only)
Disconnect the sub-oxygen sensor connector.

(c) Remove the six bolts and manifold upper heat insulator.

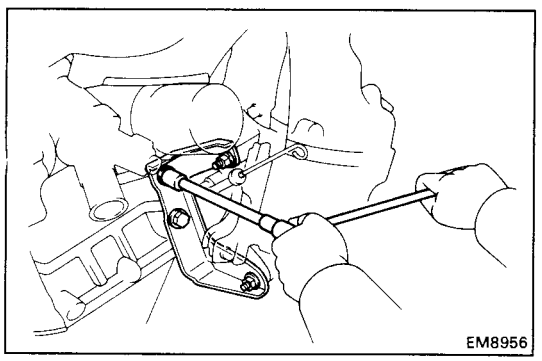

(d) Remove the two bolts, two nuts and catalytic converter stay.

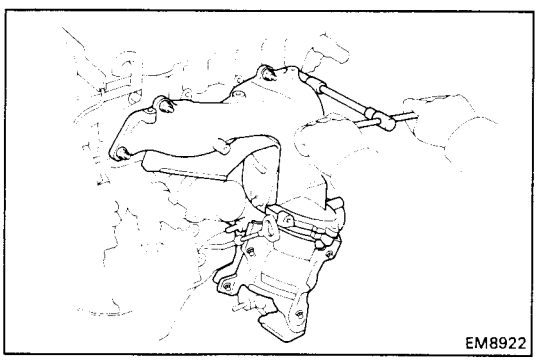

(e) Remove the six nuts, the exhaust manifold and catalytic converter assembly.

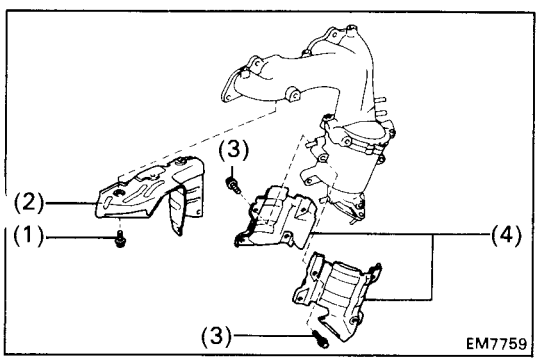

15. SEPARATE EXHAUST MANIFOLD AND CATALYTIC CONVERTER

Remove the following parts:

(1) Five bolts

(2) Manifold lower heat insulator

(3) Eight bolts

(4) Two catalytic converter heat insulators

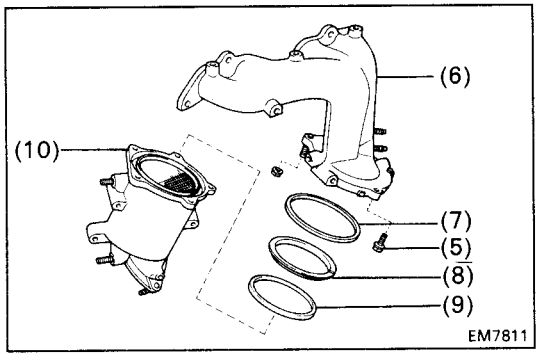

(5) Three bolts and two nuts
(6) Exhaust manifold
(7) Gasket
(8) Retainer
(9) Cushion
(10) Catalytic converter

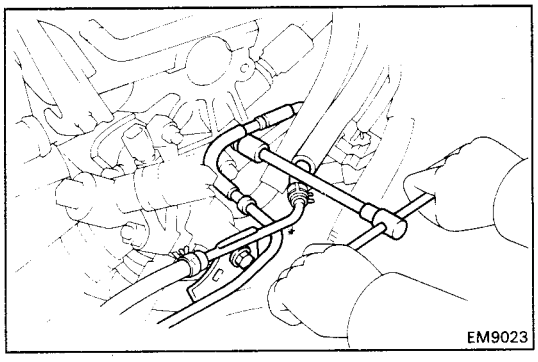

16. REMOVE WATER OUTLET AND HOUSING

(a) Disconnect the following connectors:
- Water temperature sender gauge connector
- Water temperature sensor connector
- Cold start injector time switch connector

(b) Remove the two bolts, and disconnect the fuel inlet hose (with the fuel return tube) from the water outlet and cylinder head.

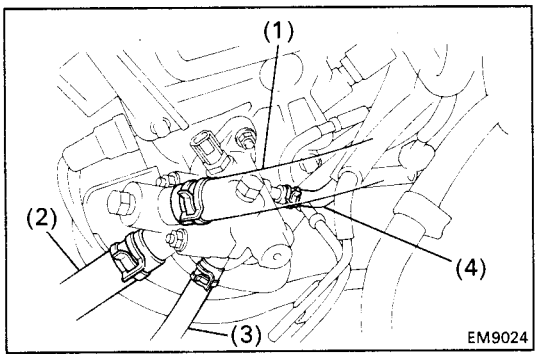

(c) Disconnect the following hoses:
(1) Water filler hose
(2) Radiator hose
(3) Heater water hose
(4) ISC water by-pass hose

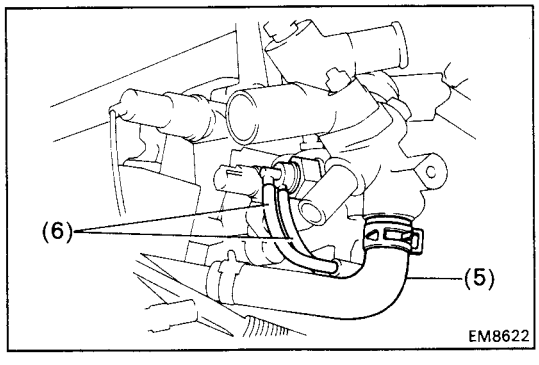

(5) Water by-pass pipe hose
(6) Two EVAP BVSV vacuum hoses

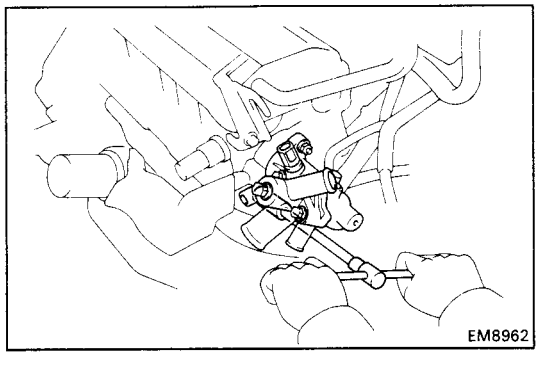

(d) Remove the two bolts, the water outlet, housing assembly and gasket.

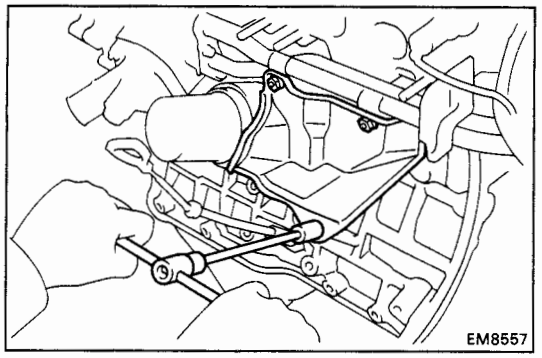

17. REMOVE WATER BY-PASS PIPE

(a) Remove the bolt, two nut and oil cooler heat protector

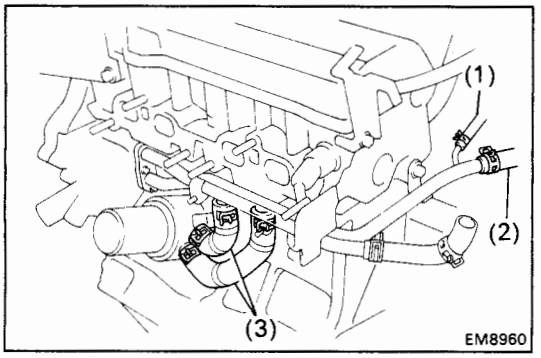

(b) Disconnect the following hoses:
   (1) ISC water by-pass hose
   (2) Heater water hose
   (3) Two oil cooler water by-pass hoses

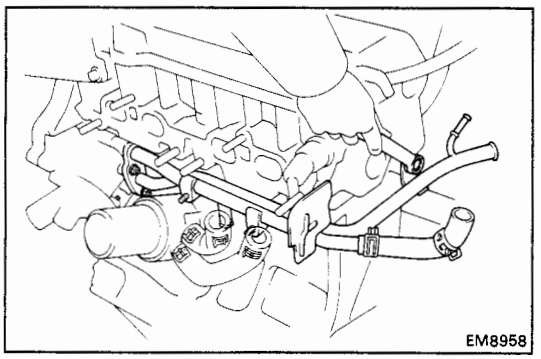

(c) Remove the two bolts, two nuts, water by-pass pipe and gasket.

(d) Remove the O-ring from the water by-pass hose.

18. REMOVE THROTTLE BODY
(See steps 7 to 10 on page FI-143)

19. REMOVE COLD START INJECTOR PIPE
(See step 3 on page FI-102)

20. REMOVE COLD START INJECTOR
(See steps 2 and 4 on pages FI-102 and 103)

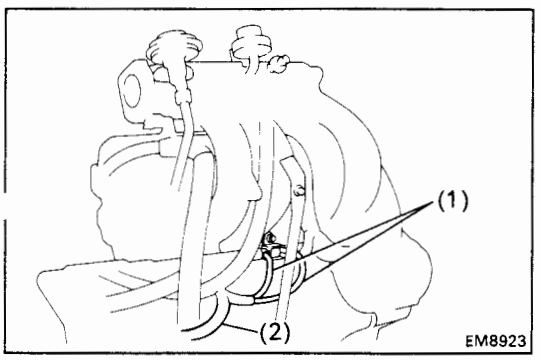

21. REMOVE EGR VALVE AND VACUUM MODULATOR

(a) (CALIF. only)
Disconnect EGR gas temperature sensor connector.

(b) Remove the following hoses:
   (1) Two vacuum hoses from EGR VSV
   (2) Vacuum hose from charcoal canister

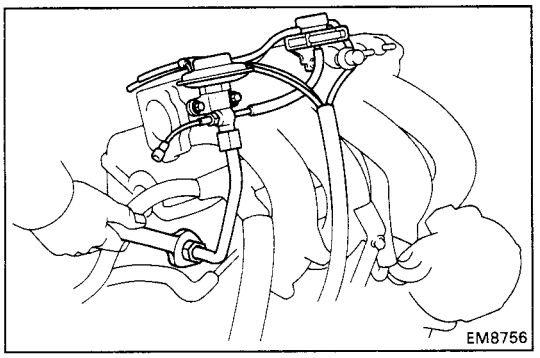

(c) Loosen the union nut of the EGR pipe, and remove two bolts, the EGR valve, vacuum modulator, vacuum hoses assembly and gasket.

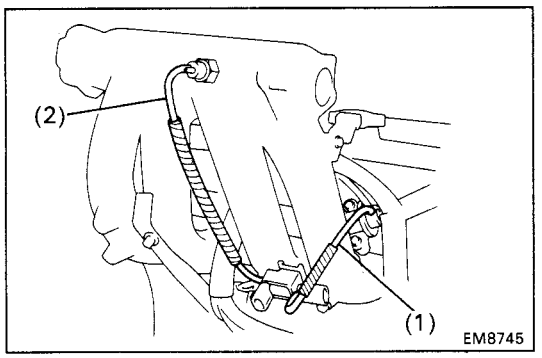

22. REMOVE FUEL PRESSURE VSV

(a) Disconnect the VSV connector.

(b) Disconnect the following hoses:

(1) Vacuum hose from fuel pressure regulator

(2) Vacuum hose from intake manifold

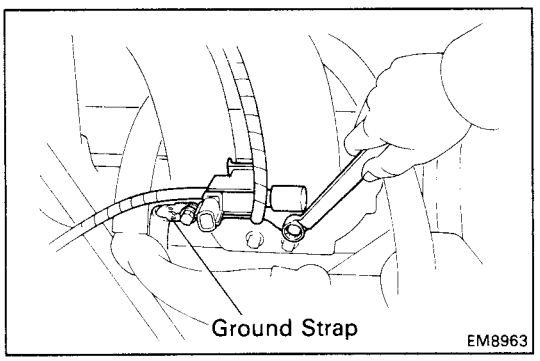

(c) Remove the two bolts and VSV. Disconnect the ground strap.

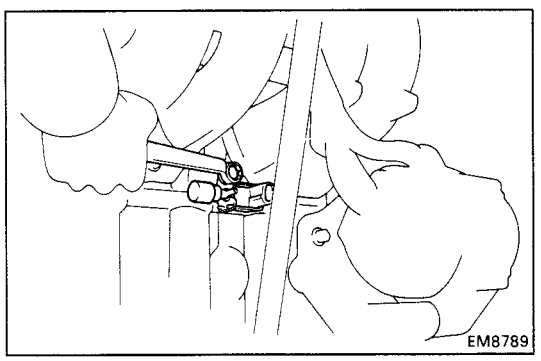

23. REMOVE EGR VSV

(a) Disconnect the VSV connector.

(b) Remove the bolt and VSV.

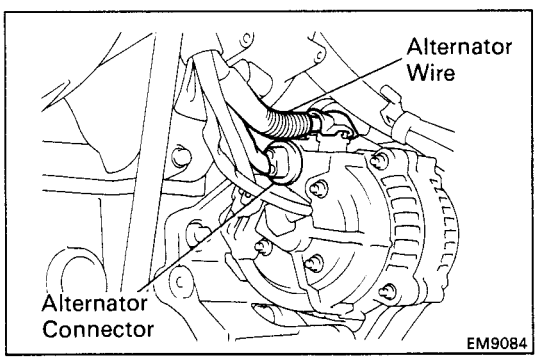

24. REMOVE INTAKE MANIFOLD

(a) Disconnect the alternator connector and wire.

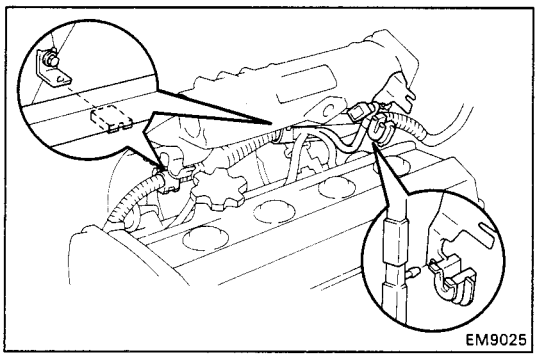

(b) Disconnect the two wire clamps from the wire brackets.

(c) Disconnect the clip of the engine wire from the LH accelerator bracket.

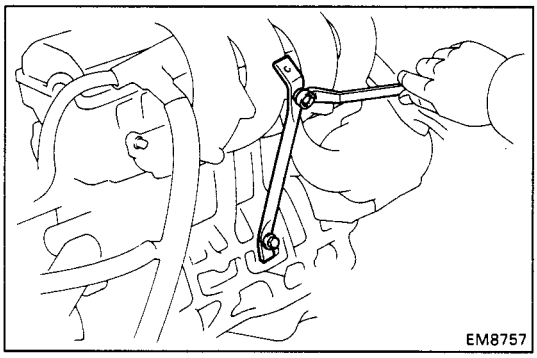

(d) Remove the two bolts and manifold stay.

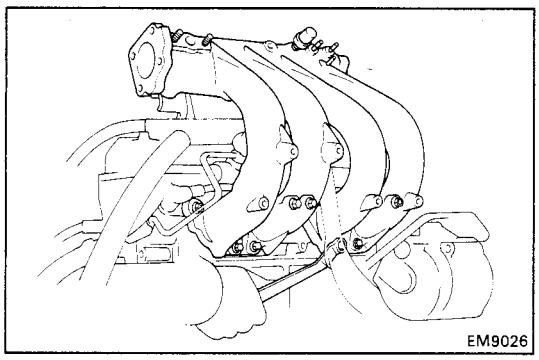

(e) Remove the six bolts, two nuts, intake manifold and gasket.

25. REMOVE DELIVERY PIPE AND INJECTORS
(See steps 7 to 10 and 12 on pages FI-122 and 123)

26. REMOVE CAMSHAFT TIMING PULLEY
(See steps 9 to 17 on pages EM-48 to 50)

27. REMOVE NO.1 IDLER PULLEY AND TENSION SPRING
(See step 22 on page EM-52)

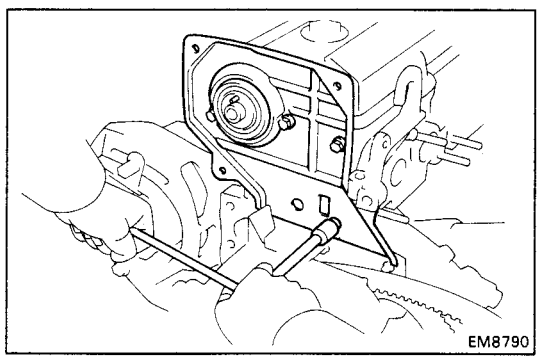

28. REMOVE NO.3 TIMING BELT COVER

Remove the four bolts and timing belt cover.

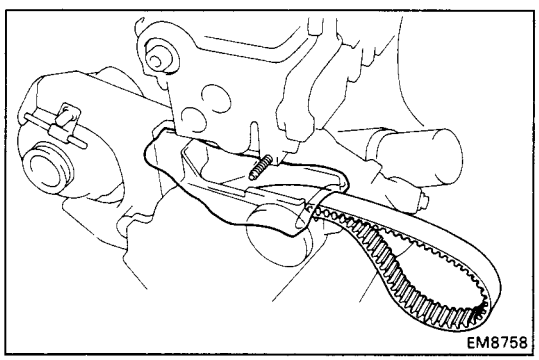

NOTICE:

- **Support the timing belt, so the meshing of the crankshaft timing pulley and timing belt does not shift.**
- **Be careful not to drop anything inside the timing belt cover.**
- **Do not allow the belt to come into contact with oil, water or dust.**

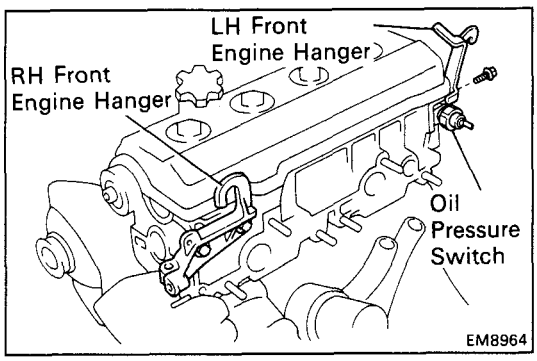

29. REMOVE RH FRONT ENGINE HANGER

Remove the two bolts and engine hanger.

30. REMOVE LH FRONT ENGINE HANGER

Remove the bolt and engine hanger.

31. REMOVE OIL PRESSURE SWITCH

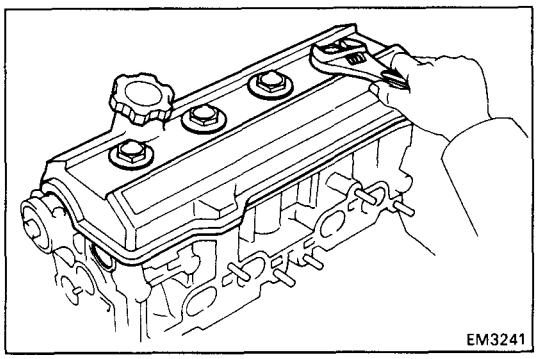

32. REMOVE CYLINDER HEAD COVER

Remove the four nuts, grommets, head cover and gasket.

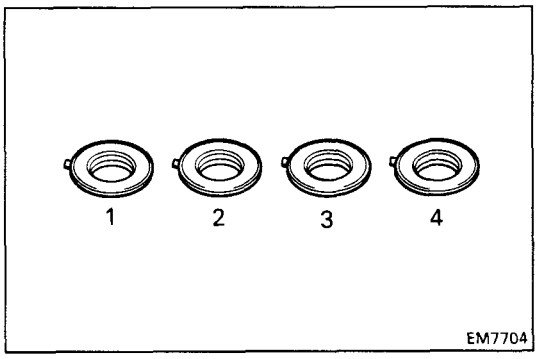

HINT: Arrange the grommets in correct order so that they can be reinstalled into their original positions. This minimizes any possibility of oil leakage from reuse grommets.

33. REMOVE CAMSHAFTS

NOTICE: Since the thrust clearance of the camshaft is small, the camshaft must be kept level while it is being removed. If the camshaft is not kept level, the portion of the cylinder head receiving the shaft thrust may crack or be damaged, causing the camshaft to seize or break. To avoid this, the following steps should be carried out.

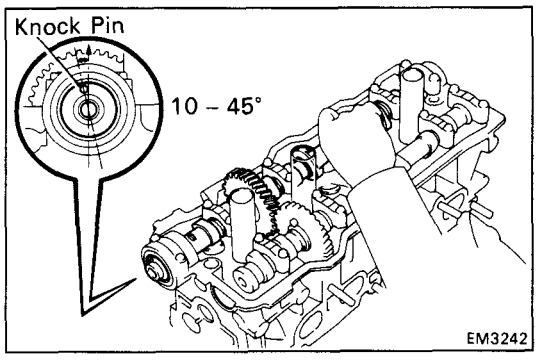

A. Remove exhaust camshaft

(a) Set the knock pin of the intake camshaft at 10 – 45° BTDC of camshaft angle.

HINT: The above angle allows No.2 and No.4 cylinder cam lobes of the exhaust camshaft to push their valve lifters evenly.

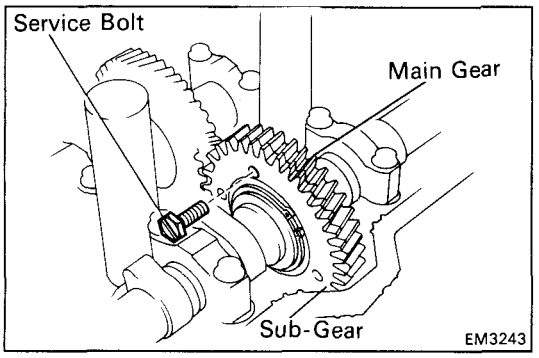

(b) Secure the exhaust camshaft sub-gear to drive gear with a service bolt.

Recommended service bolt:

Thread diameter	6 mm
Thread pitch	1.0 mm
Bolt length	16 – 20 mm (0.63 – 0.79 in.)

HINT: When removing the camshaft, make certain that the torsional spring force of the sub-gear has been eliminated by the above operation.

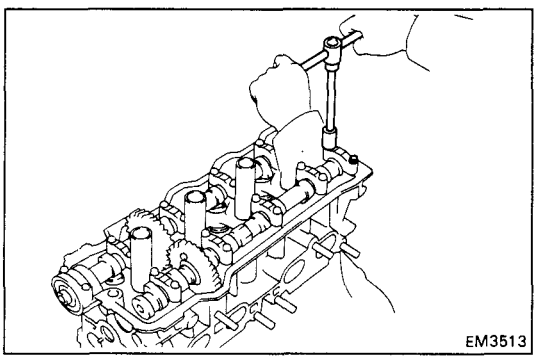

(c) Remove the two bolts and rear bearing cap.

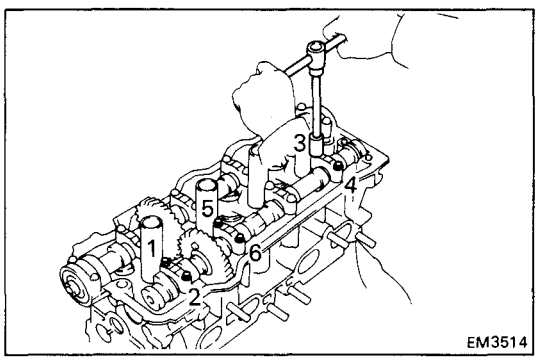

(d) Uniformly loosen and remove the six bolts on the No.1, No.2 and No.4 bearing cap in several passes in the sequence shown.

NOTICE: Do not remove the No.3 bearing cap bolts at this stage.

(e) Remove the No.1, No.2 and No.4 bearing caps.

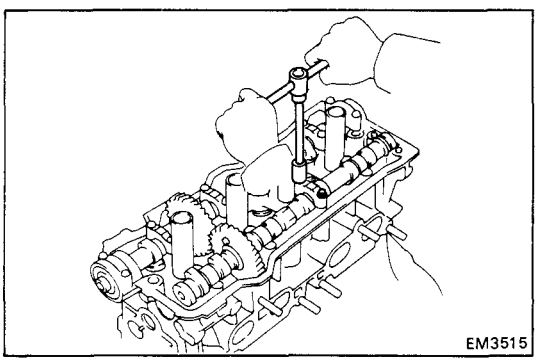

(f) Alternately loosen and remove the two bolts on the No.3 bearing cap.

HINT:

- As two No.3 bearing cap bolts are loosened, check that the camshaft is being lifted out straight and level.
- If the camshaft is not being lifted out straight and level, retighten the two No.3 bearing cap bolts. Then reverse the order of above steps from (f) to (a) and reset the knock pin of the intake camshaft at 10 – 45° BTDC, and repeat steps from (b) to (f) once again.

NOTICE: Do not pry on or attempt to force the camshaft with a tool or other objects.

(g) Remove the No.3 bearing cap and exhaust camshaft.

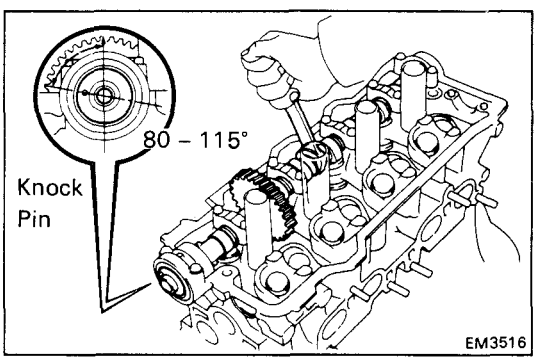

B. Remove intake camshaft

(a) Set the knock pin of the intake camshaft at 80 – 115° BTDC of camshaft angle.

HINT: The above angle allows the No.1 and No.3 cylinder cam lobes of intake camshaft to push their valve lifters evenly.

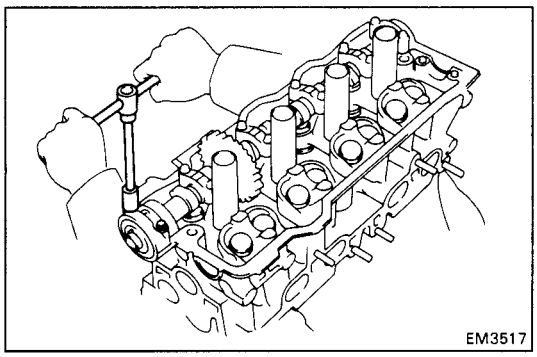

(b) Remove the two bolts, front bearing cap and oil seal.

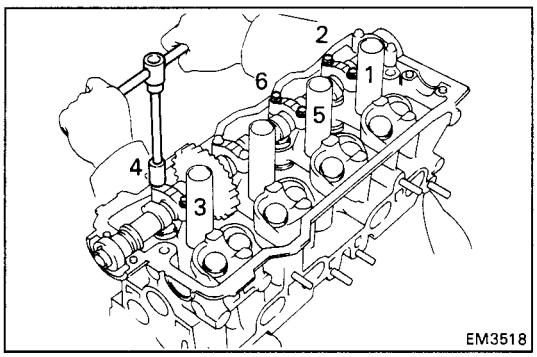

(c) Uniformly loosen and remove the bolts on the No.1, No.3 and No.4 bearing cap in several passes in the sequence shown.

NOTICE: Do not remove the No.2 bearing cap bolts at this stage.

(d) Remove the No.1, No.3 and No.4 bearing caps.

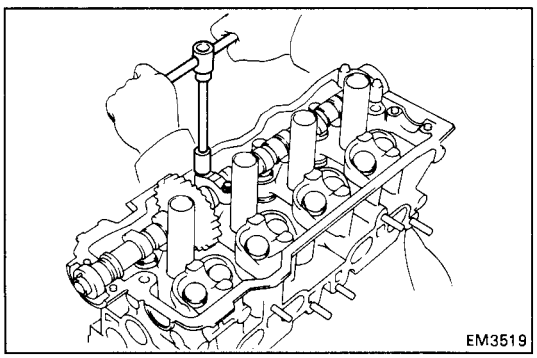

(e) Alternately loosen and remove the two bolts on the No.2 bearing cap.

HINT:

- As two No.2 bearing cap bolts are loosened, check that the camshaft is being lifted out straight and level, after breaking the adhesion on the front bearing cap.
- If the camshaft is not being lifted out straight and level, retighten the two No.2 bearing cap bolts. Reverse the order of above steps from (e) to (a) and reset the knock pin of the intake camshaft at 80 – 115° BTDC, and repeat steps from (b) to (e) once again.

NOTICE: Do not pry on or attempt to force the camshaft with a tool or other objects.

(f) Remove the No.2 bearing cap and camshaft.

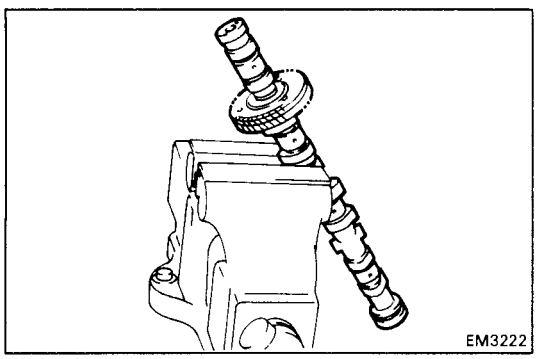

34. DISASSEMBLE EXHAUST CAMSHAFT

(a) Mount the hexagonal wrench head portion of the camshaft in a vise.

NOTICE: Be careful not to damage the camshaft.

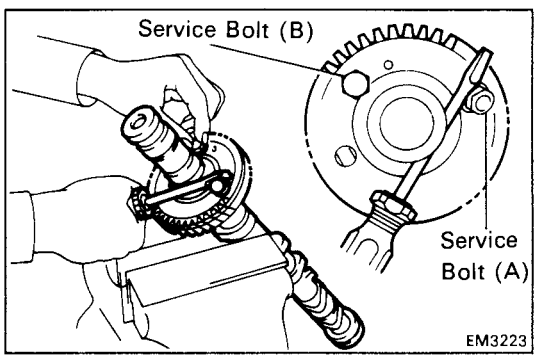

(b) Insert a service bolt (A) into the service hole of the camshaft sub-gear.

(c) Using a screwdriver, turn the sub-gear clockwise, and remove the service bolt (B).

NOTICE: Be careful not to damage the camshaft.

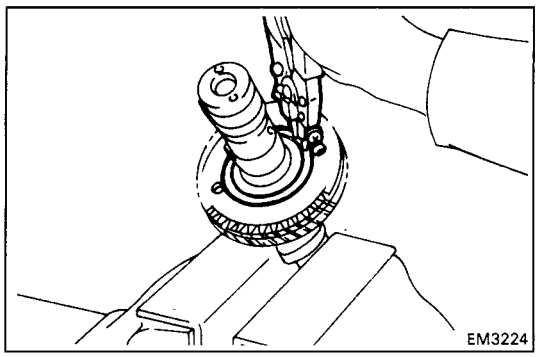

(d) Using snap ring pliers, remove the snap ring.

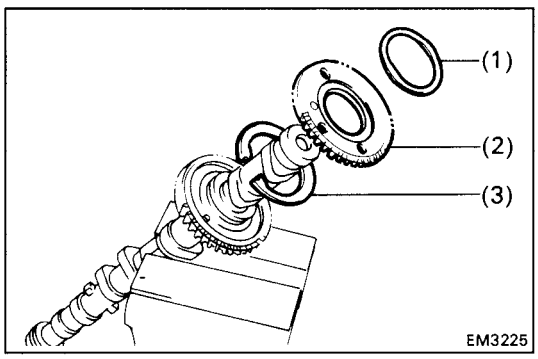

(e) Remove the following parts:
   (1) Wave washer
   (2) Camshaft sub-gear
   (3) Camshaft gear spring

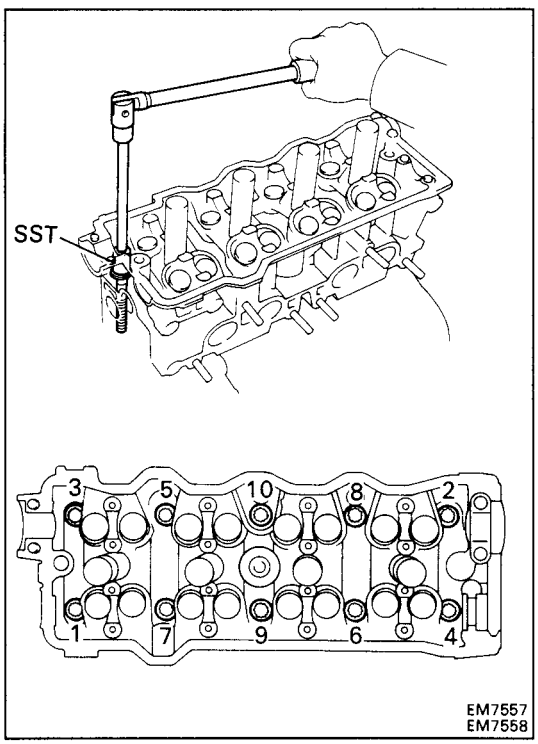

35. REMOVE CYLINDER HEAD

(a) Using SST, uniformly loosen and remove the ten cylinder head bolts in several passes in the sequence shown.

SST 09011-38121

NOTICE: Head warpage or cracking could result from removing bolts in the incorrect order.

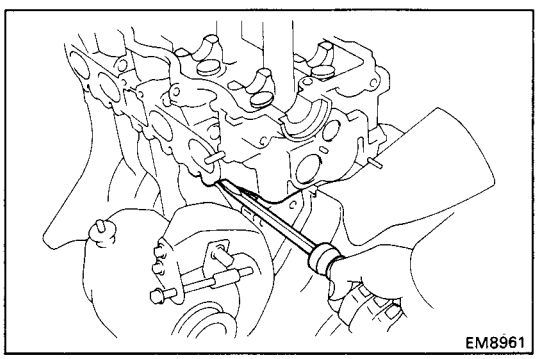

(b) Lift the cylinder head from the dowels on the cylinder block, and place the cylinder head on wooden blocks on a bench.

HINT: If the cylinder head is difficult to lift off, pry between the cylinder head and cylinder block with a screwdriver.

NOTICE: Be careful not to damage the cylinder head and cylinder block surfaces of the cylinder head.

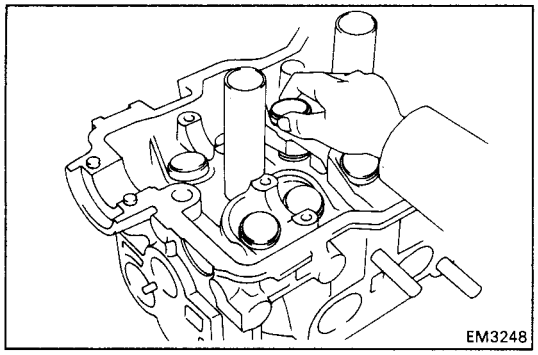

DISASSEMBLY OF CYLINDER HEAD

(See page EM-97)

1. REMOVE VALVE LIFTERS AND SHIMS

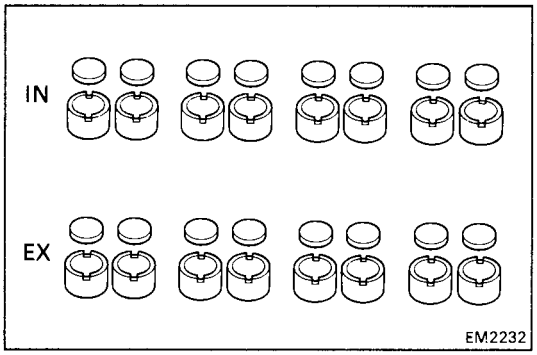

HINT: Arrange the valve lifters and shims in correct order.

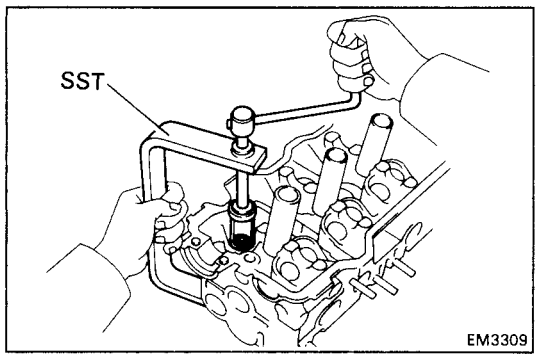

2. REMOVE VALVES

(a) Using SST, compress the valve spring and remove the two keepers.

SST 09202-70010

(b) Remove the spring retainer, valve spring, valve and spring seat.

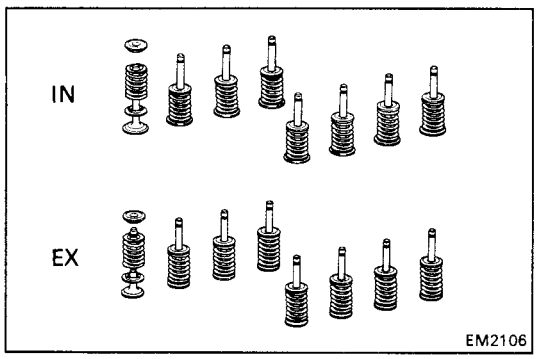

HINT: Arrange the valves, valve springs, spring seats and spring retainers in correct order.

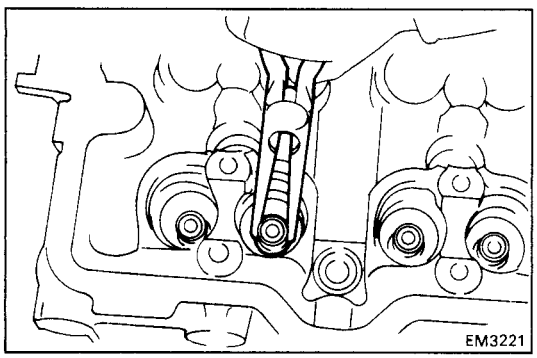

(c) Using needle-nose pliers, remove the oil seal.

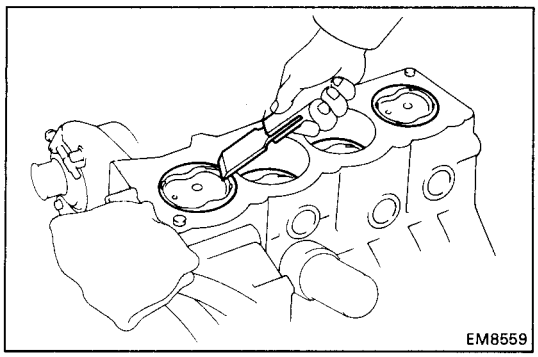

INSPECTION, CLEANING AND REPAIR OF CYLINDER HEAD COMPONENTS

1. CLEAN TOP SURFACES OF PISTONS AND CYLINDER BLOCK

(a) Turn the crankshaft, and bring each piston to top dead center (TDC). Using a gasket scraper, remove all the carbon from the piston top surface.

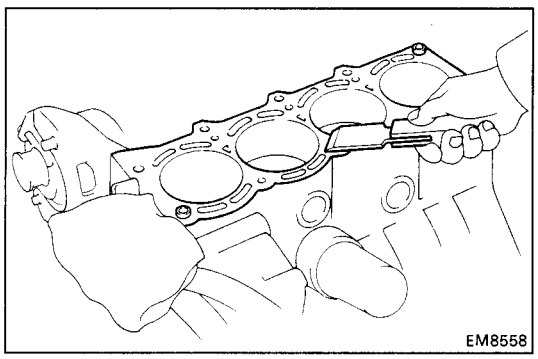

(b) Using a gasket scraper, remove all the gasket material from the top surface of the cylinder block.

(c) Using compressed air, blow carbon and oil from the bolt holes.

CAUTION: Protect your eyes when using high-com

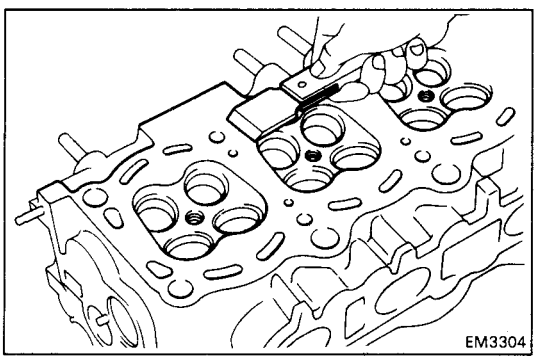

2. CLEAN CYLINDER HEAD

A. Remove gasket material

Using a gasket scraper, remove all the gasket material from the cylinder block surface.

NOTICE: Be careful not to scratch the cylinder block contact surface.

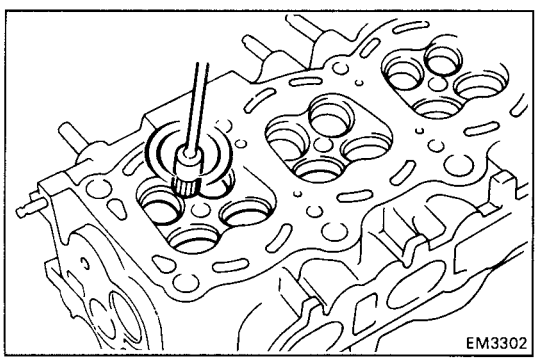

B. Clean combustion chambers

Using a wire brush, remove all the carbon from the combustion chambers.

NOTICE: Be careful not to scratch the cylinder block contact surface.

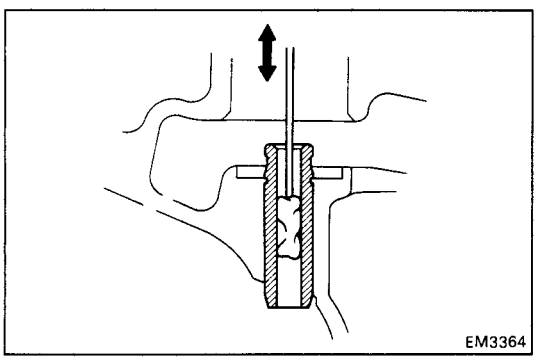

C. Clean valve guide bushings

Using a valve guide bushing brush and solvent, clean all the guide bushings.

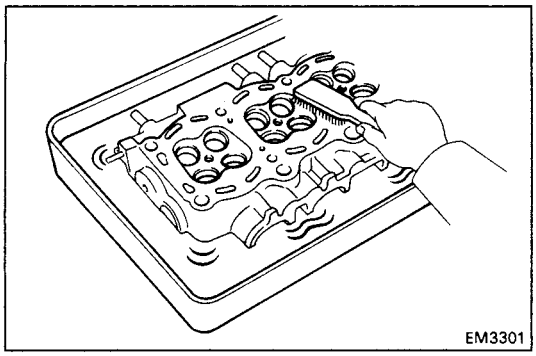

D. Clean cylinder head

Using a soft brush and solvent, thoroughly clean the cylinder head.

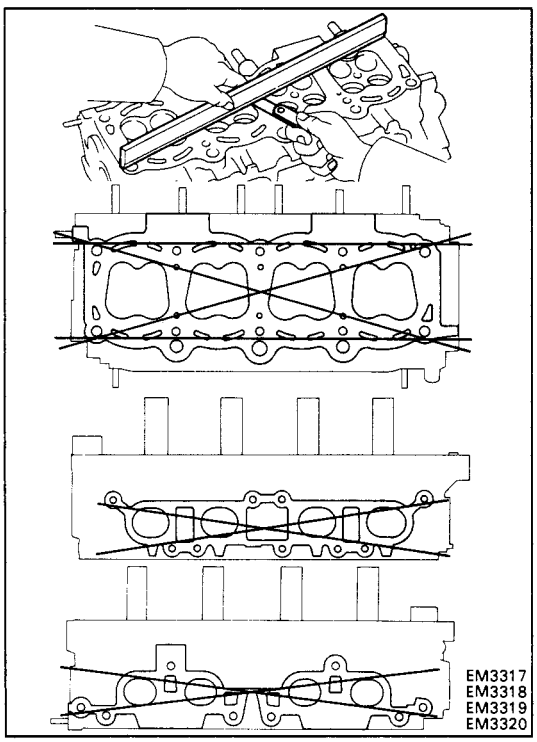

3. INSPECT CYLINDER HEAD

A. Inspect for flatness

Using precision straight edge and feeler gauge, measure the surfaces contacting the cylinder block manifolds for warpage.

Maximum warpage:

Cylinder block side	**0.05 mm (0.0020 in.)**
Manifold side	**0.08 mm (0.0031 in.)**

If warpage is greater than maximum, replace the cylinder head.

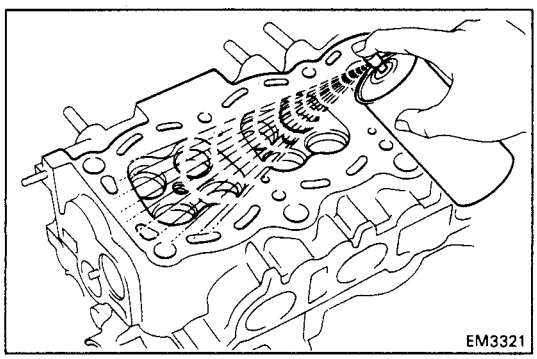

B. Inspect for cracks

Using a dye penetrant, check the combustion chamber, intake ports, exhaust ports and cylinder block surface for cracks.

If cracked, replace the cylinder head.

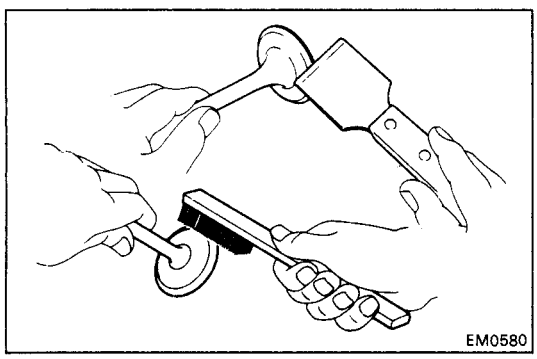

4. CLEAN VALVES

(a) Using a gasket scraper, chip off any carbon from the valve head.

(b) Using a wire brush, thoroughly clean the valve.

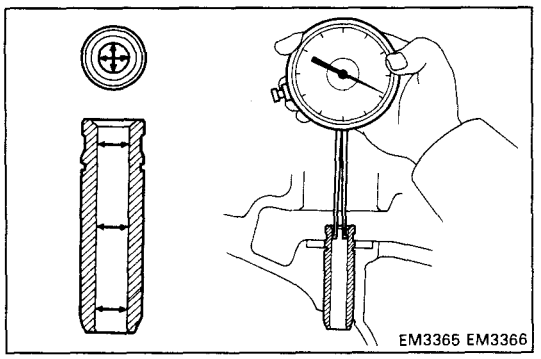

5. INSPECT VALVE STEMS AND GUIDE BUSHINGS

(a) Using a caliper gauge, measure the inside diameter of the guide bushing.

Bushing inside diameter:
6.010 – 6.030 mm (0.2366 – 0.2374 in.)

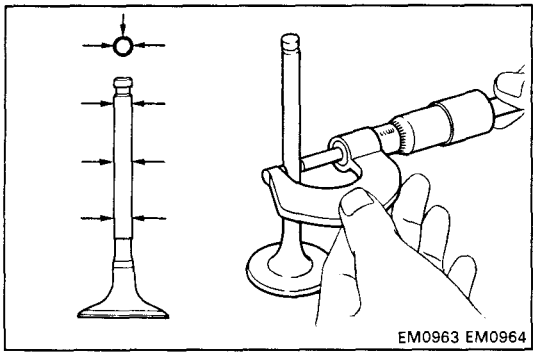

(b) Using a micrometer, measure the diameter of the valve stem.

Valve stem diameter:

Intake	**5.970 – 5.985 mm (0.2350 – 0.2356 in.)**
Exhaust	**5.965 – 5.980 mm (0.2348 – 0.2354 in.)**

(c) Subtract the valve stem diameter measurement from the guide bushing inside diameter measurement.

Standard oil clearance:

Intake	**0.025 – 0.060 mm (0.0010 – 0.0024 in.)**
Exhaust	**0.030 – 0.065 mm (0.0012 – 0.0026 in.)**

Maximum oil clearance:

Intake	**0.08 mm (0.0031 in.)**
Exhaust	**0.10 mm (0.0039 in.)**

If the clearance is greater than maximum, replace the valve and guide bushing.

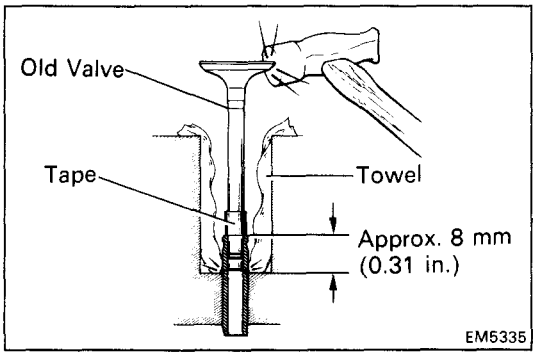

6. IF NECESSARY, REPLACE VALVE GUIDE BUSHINGS

(a) (w/ Snap Ring)
Insert an old valve wrapped with tape into the valve guide bushing, and break off the valve guide bushing by hitting it with a hammer. Remove the snap ring.

HINT: Wrap the tape approx. 8 mm (0.31 in.) from the valve stem end.

NOTICE: Be careful not damage to the valve lifter hole.

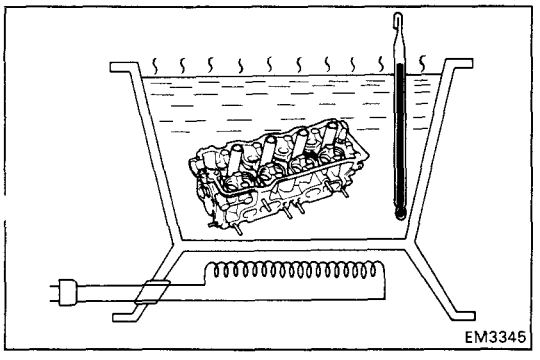

(b) Gradually heat the cylinder head to 80 – 100°C (176 – 212°F).

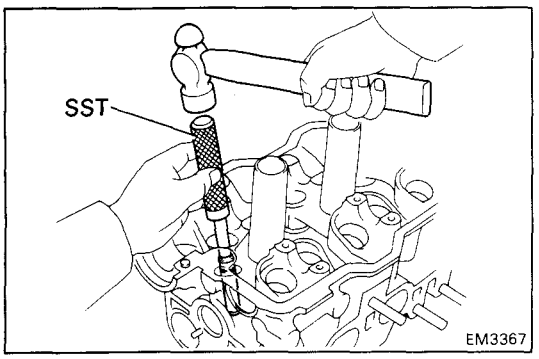

(c) Using SST and a hammer, tap out the guide bushing.

SST 09201-70010

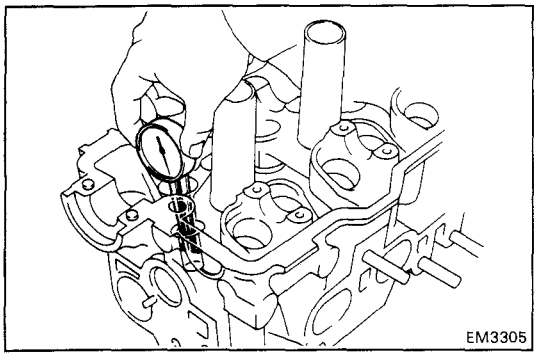

(d) Using a caliper gauge, measure the bushing bore diameter of the cylinder head.

Both intake and exhaust

Bushing bore diameter mm (in.)	Bushing size
11.000 – 11.027 (0.4331 – 0.4342)	Use STD
11.050 – 11.077 (0.4350 – 0.4361)	Use O/S 0.05

(e) Select a new guide bushing (STD size or O/S 0.05).

If the bushing bore diameter of the cylinder head is greater than 11.027 mm (0.4341 in.), machine the bushing bore to the following dimension:

11.050 – 11.077 mm (0.4350 – 0.4361 in.)

If the bushing bore diameter of the cylinder head is greater than 11.077 mm (0.4361 in.), replace the cylinder head.

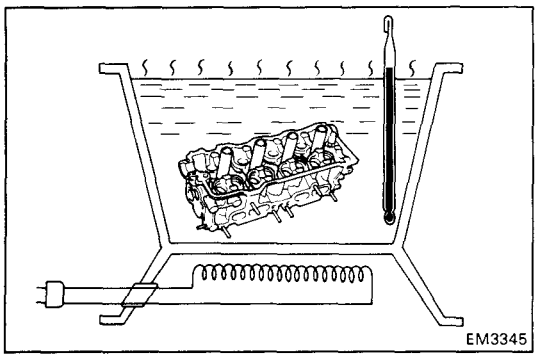

(f) Gradually heat the cylinder head to 80 – 100[C (176 – 212°F).

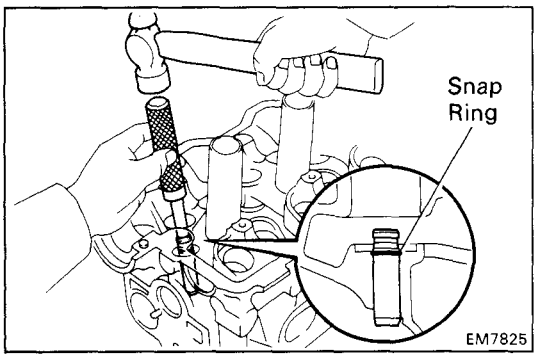

(g) Using SST and a hammer, tap in a new guide bushing until the snap ring makes contact with the cylinder head.

SST 09201-70010

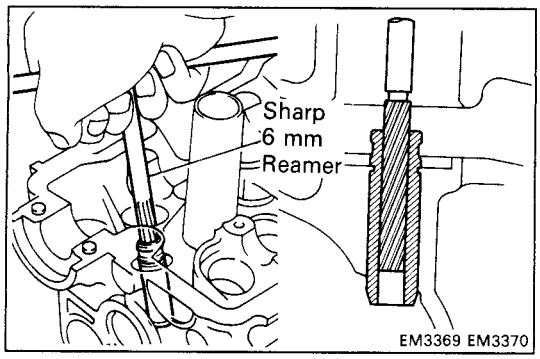

(h) Using a sharp 6 mm reamer, ream the guide bushing to obtain the standard specified clearance (See page EM-111) between the guide bushing and valve stem.

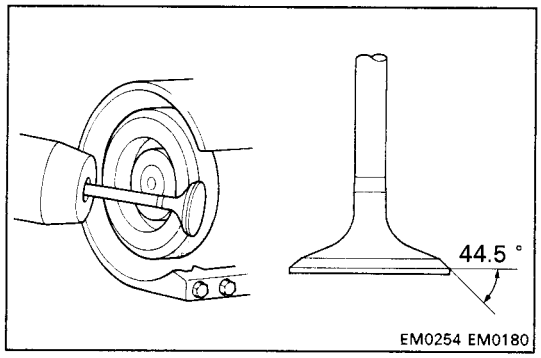

7. INSPECT AND GRIND VALVES

(a) Grind the valve enough to remove pits and carbon.

(b) Check that the valve is ground to the correct valve face angle.

Valve face angle: 44.5°

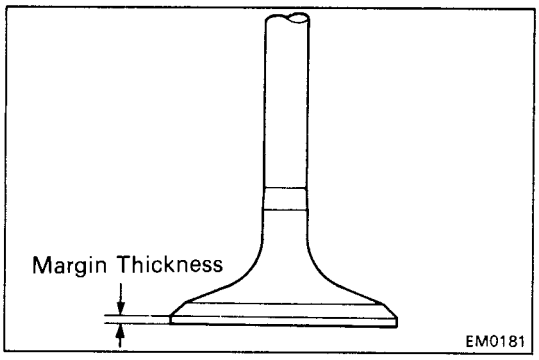

(c) Check the valve head margin thickness.

Standard margin thickness: 0.8 – 1.2 mm (0.031 – 0.047 in.)

Minimum margin thickness: 0.5 mm (0.020 in.)

If the margin thickness is less than minimum, replace the valve.

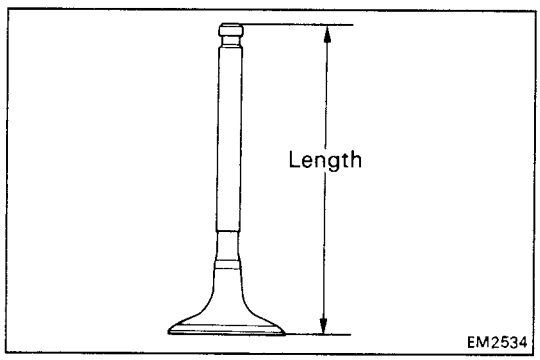

(d) Check the valve overall length.

Standard overall length:
Intake 100.60 mm (3.9606 in.)
Exhaust 100.45 mm (3.9547 in.)

Minimum overall length:
Intake 100.1 mm (3.941 in.)
Exhaust 100.0 mm (3.937 in.)

If the overall length is less than minimum, replace the valve.

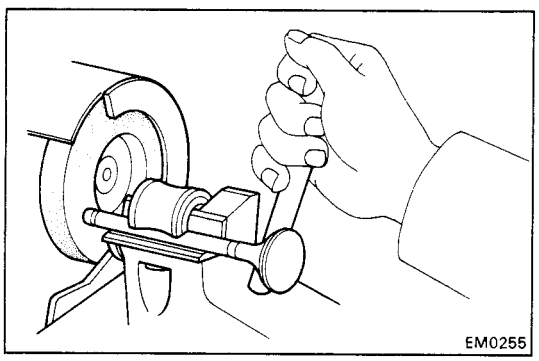

(e) Check the surface of the valve stem tip for wear.

If the valve stem tip is worn, resurface the tip with a grinder or replace the valve.

NOTICE: Do not grind off more than the minimum.

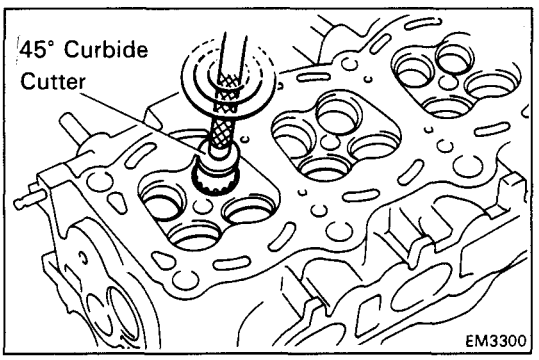

8. INSPECT AND CLEAN VALVE SEATS

(a) Using a 45° carbide cutter, resurface the valve seats. Remove only enough metal to clean the seats.

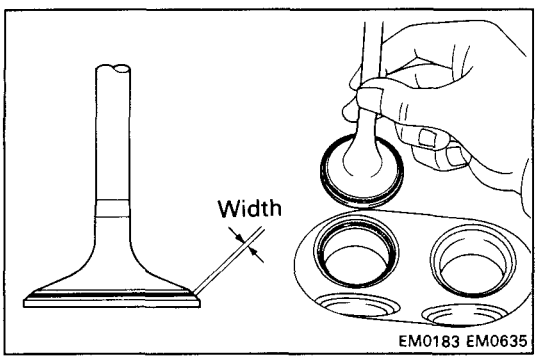

(b) Check the valve seating position.

Apply a thin coat of prussian blue (or white lead) to the valve face. Lightly press to the valve against the seat. Do not rotate the valve.

(c) Check the valve face and seat for the following:

- If blue appears 360° around the face, the valve is concentric. If not, replace the valve.
- If blue appears 360° around the valve seat, the guide and face are concentric. If not, resurface the seat.
- Check that the seat contact is in the middle of the valve face with the following width:

1.0 – 1.4 mm (0.039 – 0.055 in.)

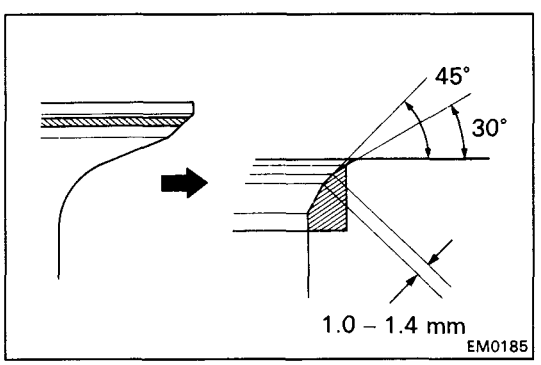

If not, correct the valve seats as follows:

(1) If the seating is too high on the valve face, use 30° and 45° cutters to correct the seat.

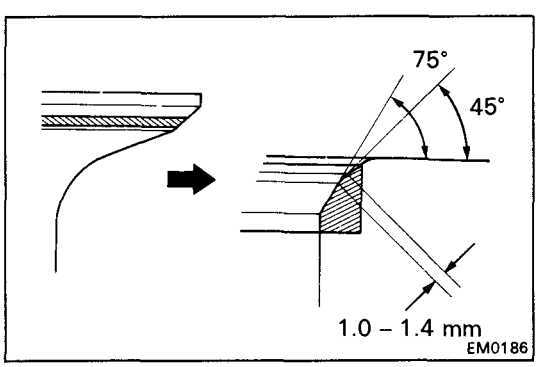

(2) If the seating is too low on the valve face, use 75° and 45° cutters to correct the seat.

(d) Hand-lap the valve and valve seat with an abrasive compound.

(e) After hand-lapping, clean the valve and valve seat.

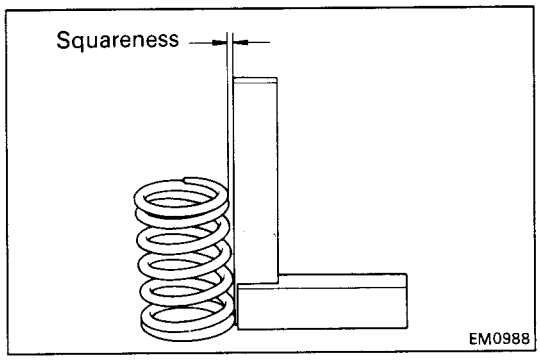

9. INSPECT VALVE SPRINGS

(a) Using a steel square, measure the squareness of the valve spring.

Maximum squareness: 2.0 mm (0.075 in.)

If squareness is greater than maximum, replace the valve spring.

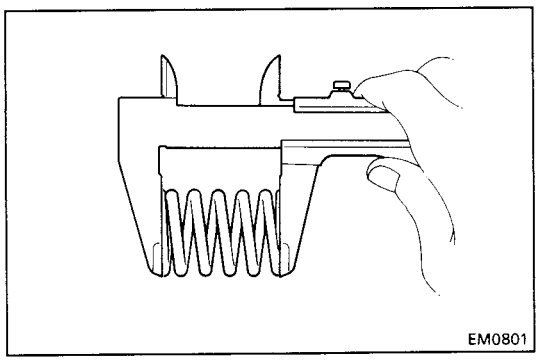

(b) Using vernier calipers, measure the free length of the valve spring.

Free length: 45.0 mm (1.772 in.)

If the free length is not as specified, replace the valve spring.

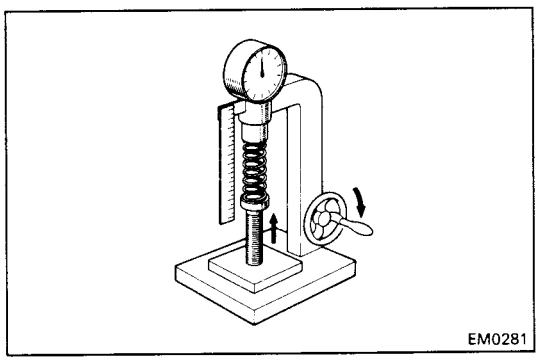

(c) Using a spring tester, measure the tension of the valve spring at the specified installed length.

Installed tension:
16.7 – 19.3 kg (36.8 – 42.5 lb, 164 – 189 N)
at 34.7 mm (0.000 in.)

If the installed tension is not as specified, replace the valve spring.

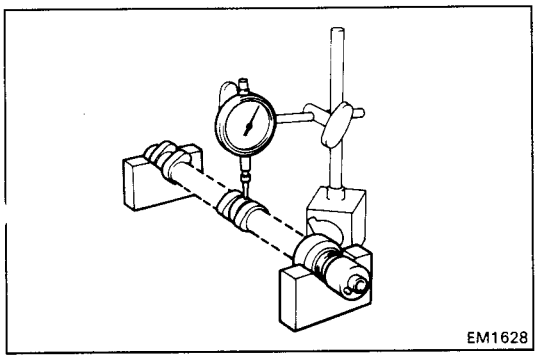

10. INSPECT CAMSHAFTS AND BEARINGS

A. Inspect camshaft for runout

(a) Place the camshaft on V-blocks.

(b) Using a dial indicator, measure the circle runout at the center journal.

Maximum circle runout: 0.04 mm (0.0016 in.)

If the circle runout is greater than maximum, replace the camshaft.

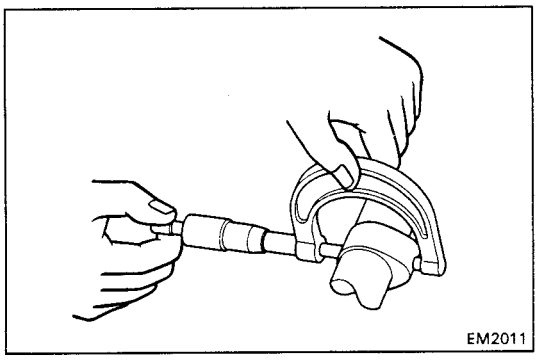

B. Inspect cam lobes

Using a micrometer, measure the cam lobe height.

Standard cam lobe height:

Intake	**35.310 – 35.410 mm (1.3902 – 1.3941 in.)**
Exhaust	**35.560 – 35.660 mm (1.4000 – 1.4039 in.)**

Minimum cam lobe height:

Intake	**35.20 mm (1.3858 in.)**
Exhaust	**35.45 mm (1.3957 in.)**

If the cam lobe height is greater than minimum, replace the camshaft.

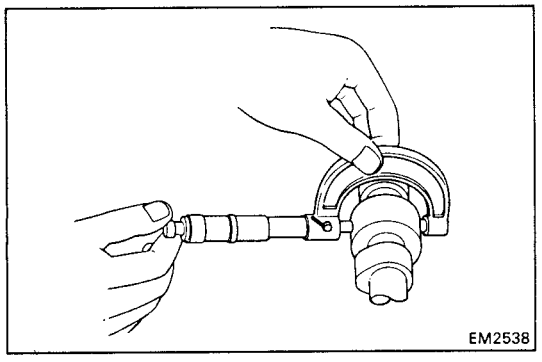

C. Inspect camshaft journals

Using a micrometer, measure the journal diameter.

Journal diameter: 26.959 – 26.975 mm (1.0614 – 1.0620 in.)

If the journal diameter is not as specified, check the oil clearance.

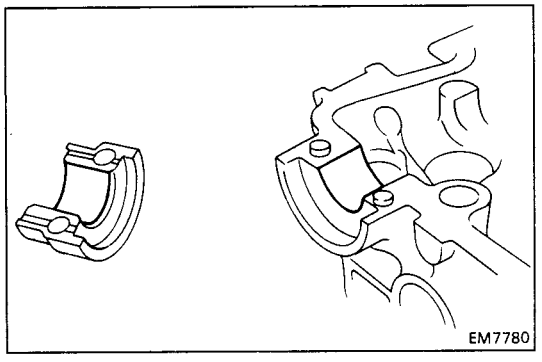

D. Inspect camshaft bearings

Check the bearings for flaking and scoring.

If the bearings are damaged, replace the bearing caps and cylinder head as a set.

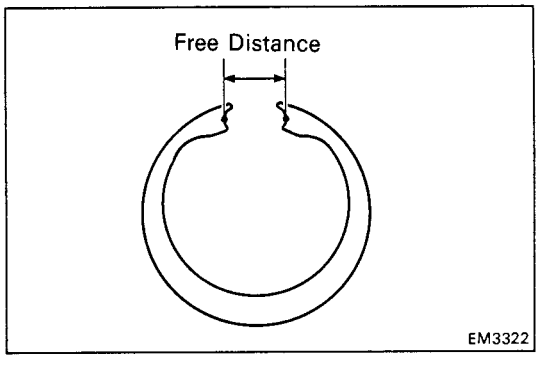

E. Inspect camshaft gear spring

Using vernier calipers, measure the free distance between the spring end.

Free distance: 22.5 – 22.9 mm (0.886 – 0.902 in.)

If the free distance is not as specified, replace the gear spring.

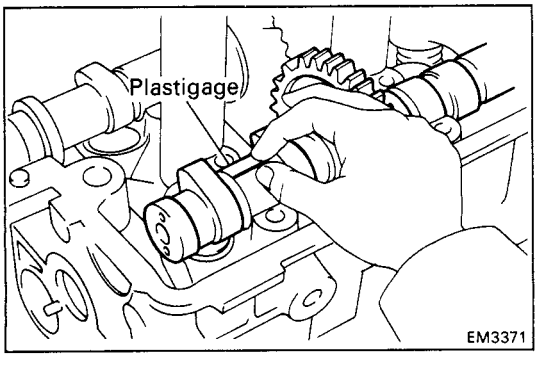

F. Inspect camshaft journal oil clearance

(a) Clean the bearing caps and camshaft journals.

(b) Place the camshafts on the cylinder head.

(c) Lay a strip of Plastigage across each of the camshaft journals.

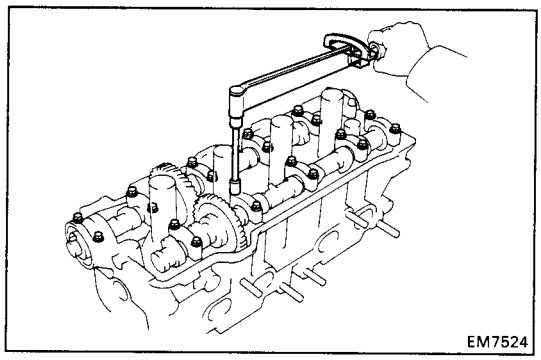

(d) Install the bearing caps.
(See step 4 on pages EM-123 to 125)

Torque: 190 kg-cm (14 ft-lb, 19 N·m)

NOTICE: Do not turn the camshaft.

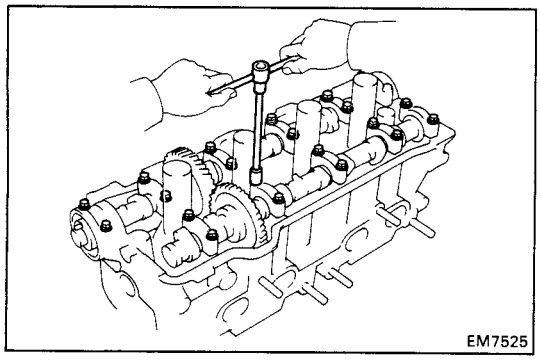

(e) Remove the bearing caps.

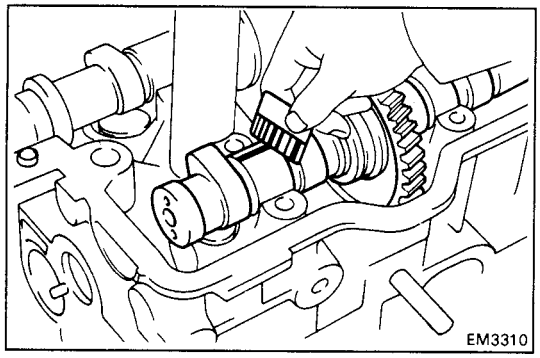

(f) Measure the Plastigage at its widest point.

Standard oil clearance: 0.025 – 0.062 mm (0.0010 – 0.0024 in.)

Maximum oil clearance: 0.10 mm (0.0039 in.)

If the oil clearance is greater than maximum, replace the camshaft. If necessary, replace the bearing caps and cylinder head as a set.

(g) Completely remove the Plastigage.

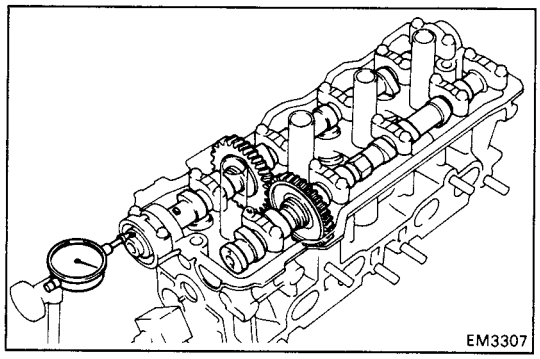

G. Inspect camshaft thrust clearance

(a) Install the camshafts.
(See step 4 on pages EM-123 to 125)

(b) Using a dial indicator, measure the thrust clearance while moving the camshaft back and forth.

Standard thrust clearance:

Intake	**0.045 – 0.100 mm (0.0018 – 0.0039 in.)**
Exhaust	**0.030 – 0.085 mm (0.0012 – 0.0033 in.)**

Maximum thrust clearance:

Intake	**0.12 mm (0.0047 in.)**
Exhaust	**0.10 mm (0.0039 in.)**

If the thrust clearance is greater than maximum, replace the camshaft. If necessary, replace the bearing caps and cylinder head as a set.

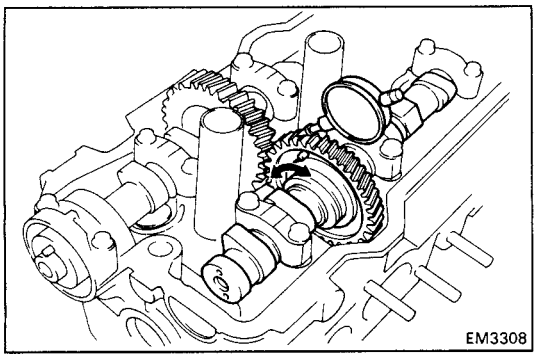

H. Inspect camshaft gear backlash

(a) Install the camshafts without installing the exhaust cam sub-gear.
(See step 4 on page EM-123 to 125)

(b) Using a dial indicator, measure the backlash.

Standard backlash: 0.020 – 0.200 mm (0.0008 – 0.0079 in.)

Maximum backlash: 0.30 mm (0.0188 in.)

If the backlash is greater than maximum, replace the camshafts.

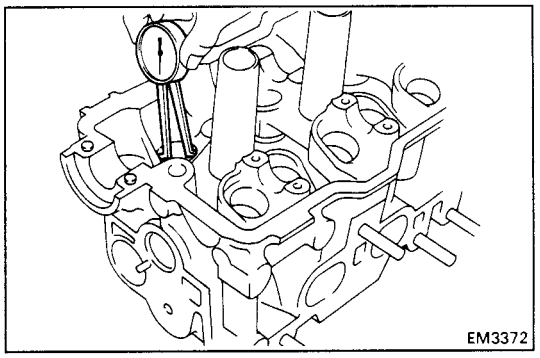

11. INSPECT VALVE LIFTERS AND LIFTER BORES

(a) Using a caliper gauge, measure the lifter bore diameter of the cylinder head.

Lifter bore diameter: 28.000 – 28.021 mm (1.1024 – 1.1032 in.)

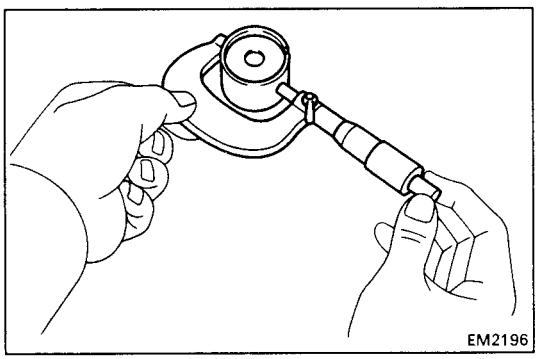

(b) Using a micrometer, measure the lifter diameter.

Lifter diameter: 27.975 – 27.985 mm (1.1014 – 1.1018 in.)

(c) Subtract the lifter diameter measurement from the lifter bore diameter measurement.

Standard oil clearance: 0.015 – 0.046 mm (0.0005 – 0.0018 in.)

Maximum oil clearance: 0.07 mm (0.0028 in.)

If the oil clearance is greater than maximum, replace the lifter. If necessary, replace the cylinder head.

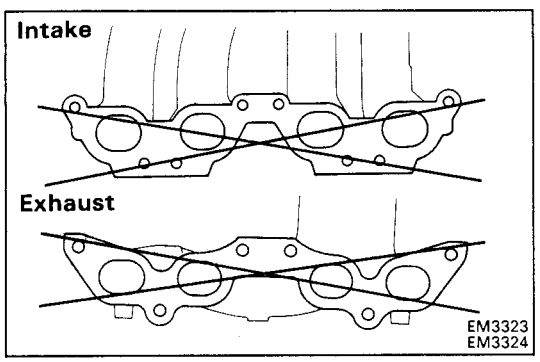

12. INSPECT INTAKE AND EXHAUST MANIFOLDS

Using precision straight edge and feeler gauge, measure the surface contacting the cylinder head for warpage.

Maximum warpage: 0.30 mm (0.0118 in.)

If warpage is greater than maximum, replace the manifold.

ASSEMBLY OF CYLINDER HEAD

(See page EM-97)

HINT:
- Thoroughly clean all parts to be assembled.
- Before installing the parts, apply new engine oil to all sliding and rotating surfaces.
- Replace all gaskets and oil seals with new ones.

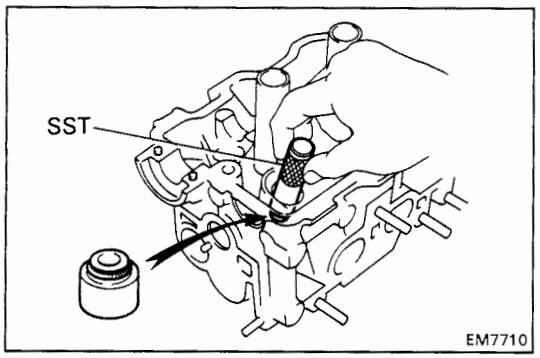

1. INSTALL VALVES

(a) Using SST, push in a new oil seal.

SST 09201-41020

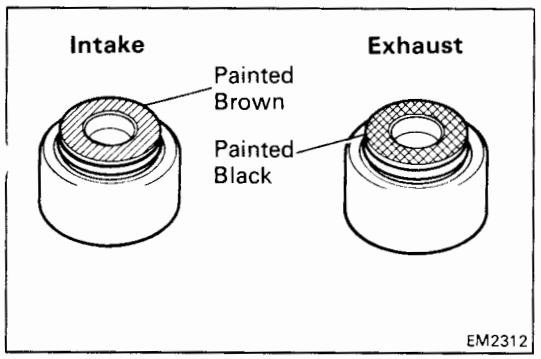

HINT: The intake valve oil seal is brown and the exhaust valve oil seal is black.

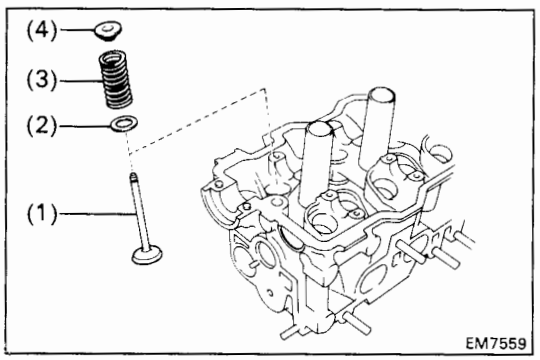

(b) Install the following parts:
- (1) Valve
- (2) Spring seat
- (3) Valve spring
- (4) Spring retainer

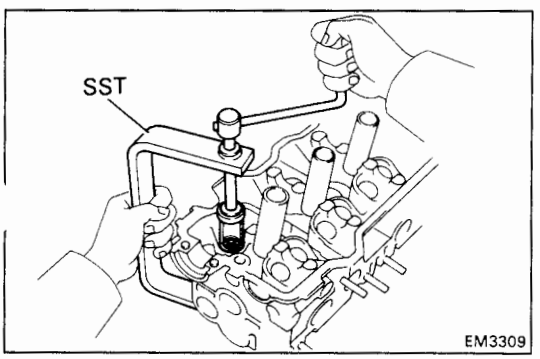

(c) Using SST, compress the valve spring and place the two keepers around the valve stem.

SST 09202-70010

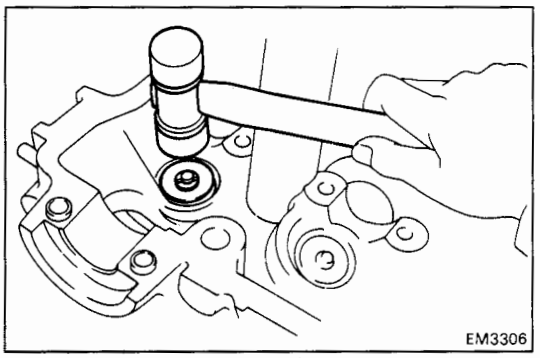

(d) Using a plastic-faced hammer, lightly tap the valve stem tip to assure proper fit.

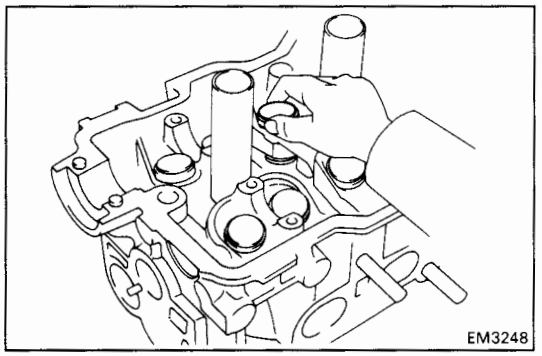

2. INSTALL VALVE LIFTERS AND SHIMS

(a) Install the valve lifter and shim.

(b) Check that the valve lifter rotates smoothly by hand.

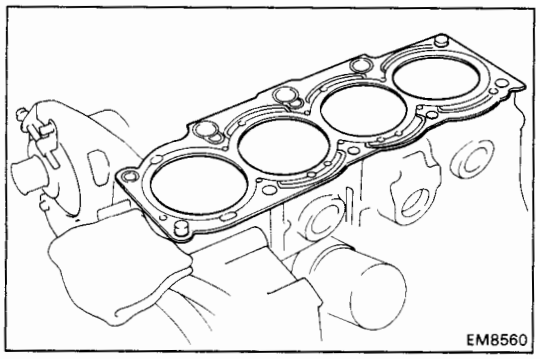

INSTALLATION OF CYLINDER HEAD

(See page EM-97)

1. INSTALL CYLINDER HEAD

A. Place cylinder head on cylinder block

(a) Place a new cylinder head gasket in position on the cylinder block.

NOTICE: Be careful of the installation direction.

(b) Place the cylinder head in position on the cylinder head gasket.

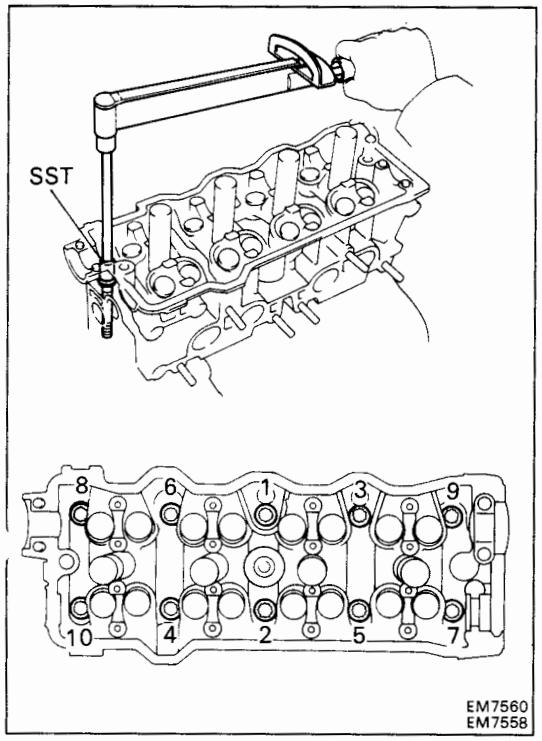

B. Install cylinder head bolts

HINT:

- The cylinder head bolts are tightened in two progressive steps (steps(b)and (d)).
- If any cylinder head bolt is broken or deformed, replace it.

(a) Apply a light coat of engine oil on the threads and under the heads of the cylinder head bolts.

(b) Using SST, install and uniformly tighten the ten cylinder head bolts in several passes in the sequence shown.

SST 09011-38121

Torque: 500 kg-cm (36 ft-lb, 47 N·m)

If any one of the cylinder head bolts does not meet the torque specification, replace the cylinder head bolt.

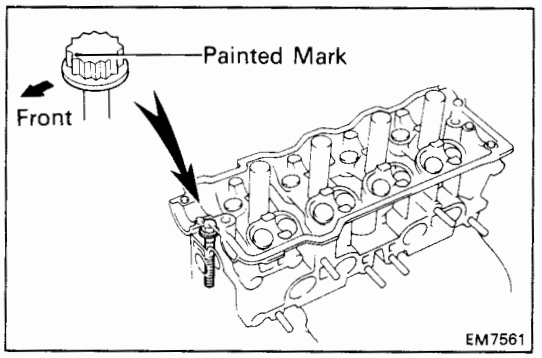

(c) Mark the front of the cylinder head bolt head with paint.

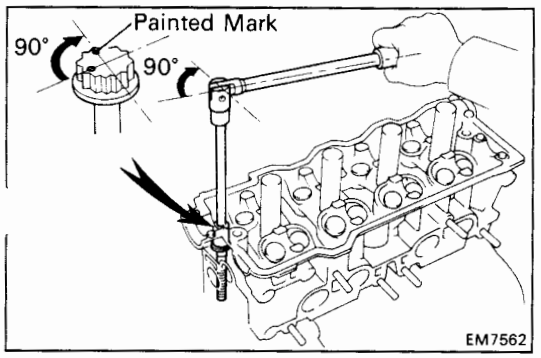

(d) Retighten the cylinder head bolts 90° in the numerical order shown.

(e) Check that the painted mark is now at a 90° angle to front.

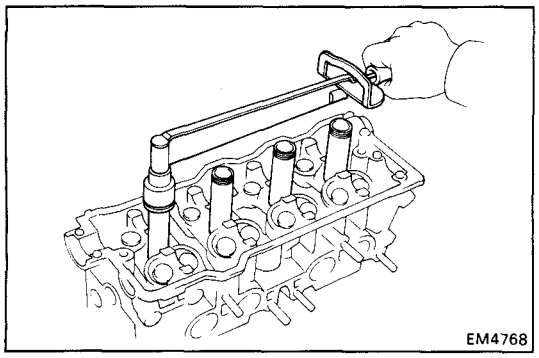

2. INSTALL SPARK PLUG TUBES

(a) Clean the cylinder head tube holes of any residual adhesive, oil or foreign particles. Remove any oil with kerosene or gasoline.

(b) Screw the threads of the spark plug tube coated with adhesive into the cylinder head.

(c) Using the spark plug tube nut and a 30 mm socket wrench, tighten the spark plug tubes.

Torque: 400 kg-cm (29 ft-lb, 39 N·m)

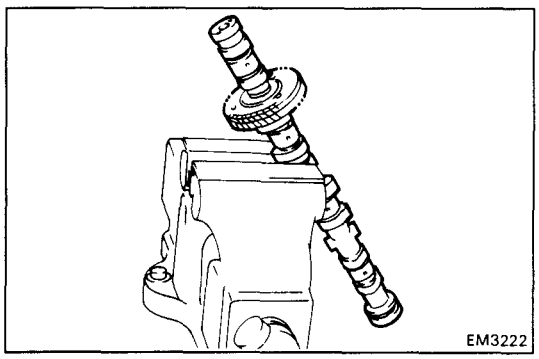

3. ASSEMBLE EXHAUST CAMSHAFT

(a) Mount the hexagonal wrench head portion of the camshaft in a vise.

NOTICE: Be careful not to damage the camshaft.

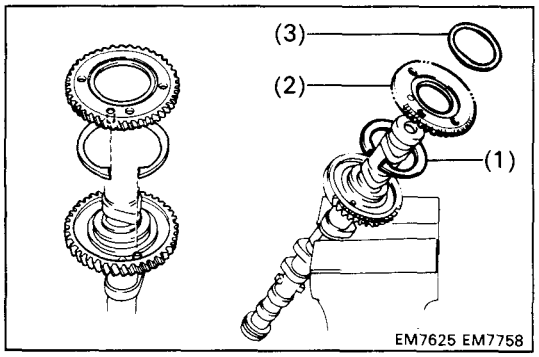

(b) Install the following parts:

(1) Camshaft gear spring

(2) Camshaft sub-gear

(3) Wave washer

HINT: Align the pins on the gears with the spring ends.

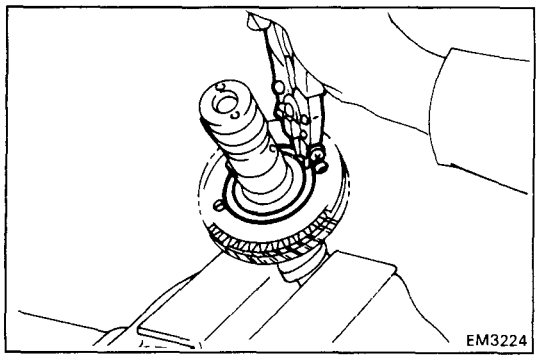

(c) Using snap ring pliers, install the snap ring.

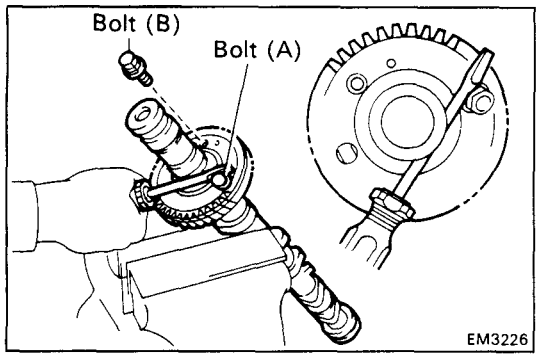

(d) Insert a service bolt (A) into the service hole of the camshaft sub-gear.

(e) Using a screwdriver, align the holes of the camshaft main gear and sub-gear by turning the camshaft sub-gear clockwise, and install a service bolt (B).

NOTICE: Be careful not to damage the camshaft.

4. INSTALL CAMSHAFTS

NOTICE: Since the thrust clearance of the camshaft is small, the camshaft must be kept level while it is being installed. If the camshaft is not kept level, the portion of the cylinder head receiving the shaft thrust may crack or be damaged, causing the camshaft to seize or break. To avoid this, the following steps should be carried out.

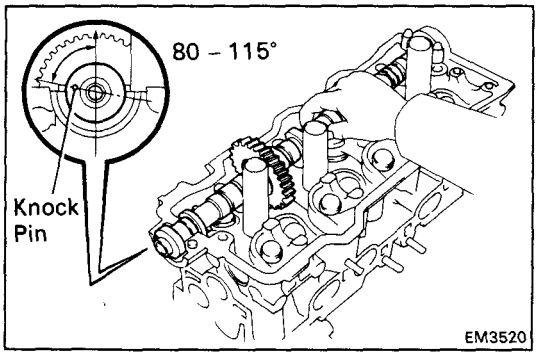

A. Install intake camshaft

(a) Apply MP grease to the thrust portion of the camshaft.

(b) Place the intake camshaft at 80 – 115° BTDC of camshaft angle on the cylinder head.

HINT: The above angle allows the No.1 and No.3 cylinder cam lobes of the intake camshaft to push their valve lifters evenly.

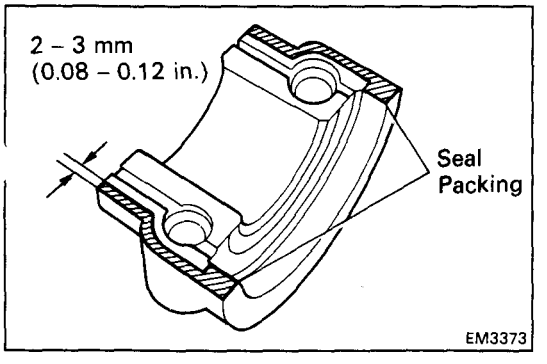

(c) Apply seal packing to the No.1 bearing cap as shown.

Seal packing: Part No. 08826-00080 or equivalent

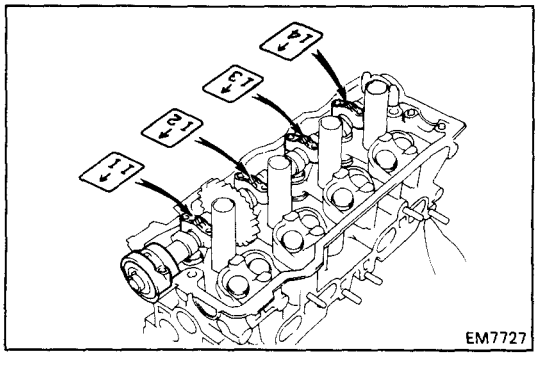

(d) Install the bearing caps in their proper locations.

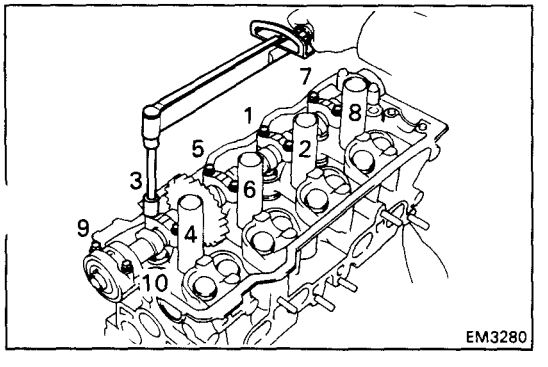

(e) Apply a light coat of engine oil on the threads and under the heads of the bearing cap bolts.

(f) Install and uniformly tighten the ten bearing cap bolts in several passes in the sequence shown.

Torque: 190 kg-cm (14 ft-lb, 19 N·m)

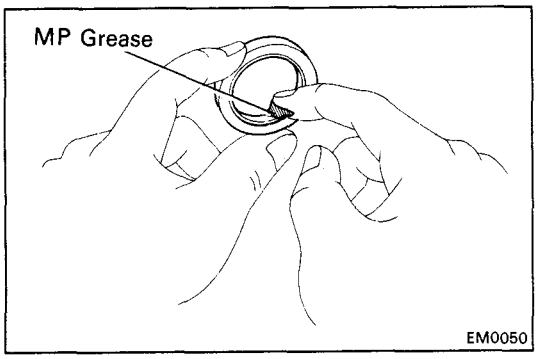

(g) Apply MP grease to a new oil seal lip.

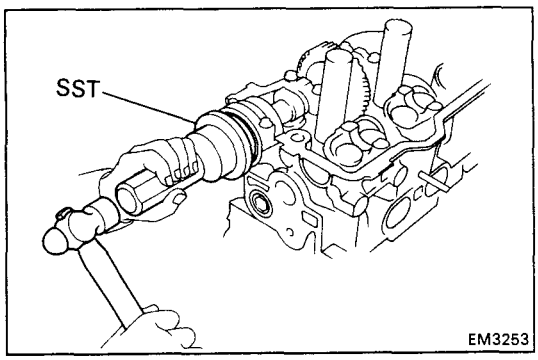

(h) Using SST, tap in the oil seal.

SST 09223-46011

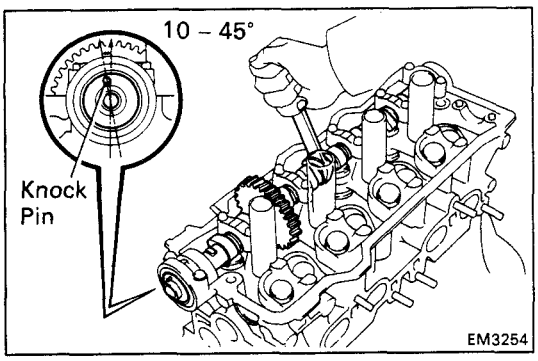

B. Install exhaust camshaft

(a) Set the knock pin of the intake camshaft at 10 – 45° BTDC of camshaft angle.

HINT: The above angle allows the No.2 and No.4 cylinder cam lobes of the exhaust camshaft to push their valve lifters evenly.

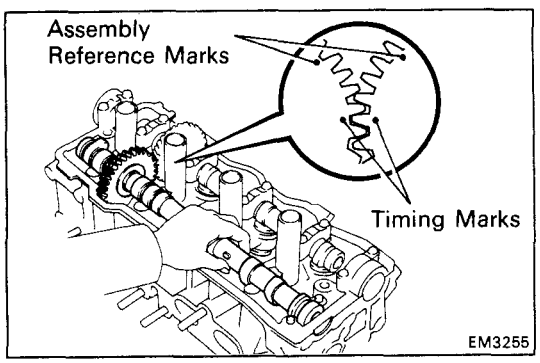

(b) Apply MP grease to the thrust portion of the camshaft.

(c) Engage the exhaust camshaft gear to the intake camshaft gear by matching the timing marks on each gear.

(d) Roll down the exhaust camshaft onto the bearing journals while engaging gears with each other.

NOTICE: There are also assembly reference marks on each gear as shown in the illustration. Do not use these marks.

(e) Turn the intake camshaft clockwise or counterclockwise little by little until the exhaust camshaft sits in the bearing journals evenly without rocking the camshaft on the bearing journals.

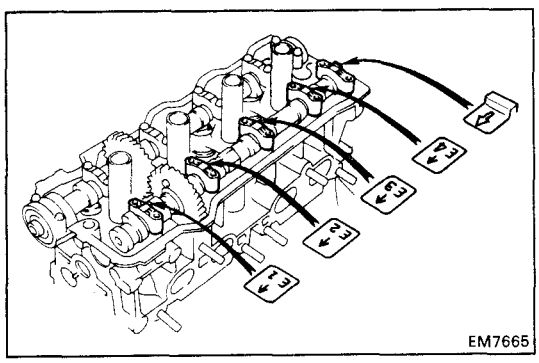

NOTICE: It is very important to replace the camshaft in the bearing journals evenly while tightening bearing caps in the subsequent steps.

(f) Install the bearing caps in their proper location.

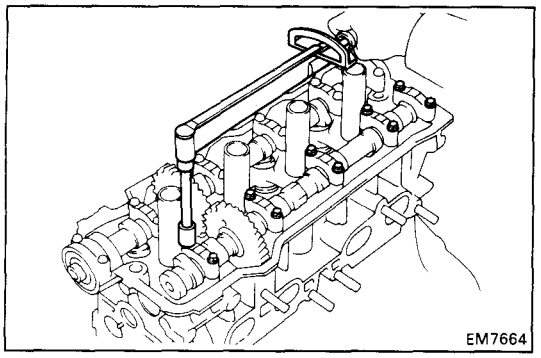

(g) Apply a light coat of engine oil on the threads and under the heads of bearing cap bolts.

(h) Install and uniformly tighten the ten bearing cap bolts in several passes, in the sequence shown.

Torque: 190 kg-cm (14 ft-lb, 19 N·m)

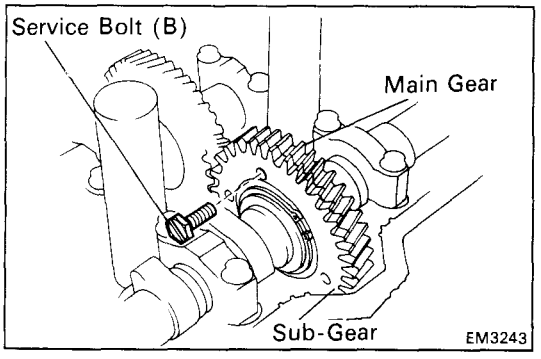

(i) Remove the service bolt (B).

5. CHECK AND ADJUST VALVE CLEARANCE
(See page EM-16)

Turn the camshaft and position the cam lobe upward, and check and adjust the valve clearance.

Valve clearance (Cold):

Intake	**0.19 – 0.29 mm (0.007 – 0.011 in.)**
Exhaust	**0.28 – 0.38 mm (0.011 – 0.015 in.)**

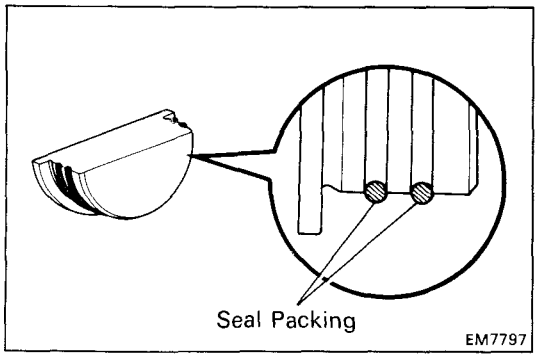

6. INSTALL SEMI-CIRCULAR PLUGS

(a) Remove any old packing (FIPG) material.

(b) Apply seal packing to the semi-circular plug grooves.

Seal packing: Part No. 08826-00080 or equivalent

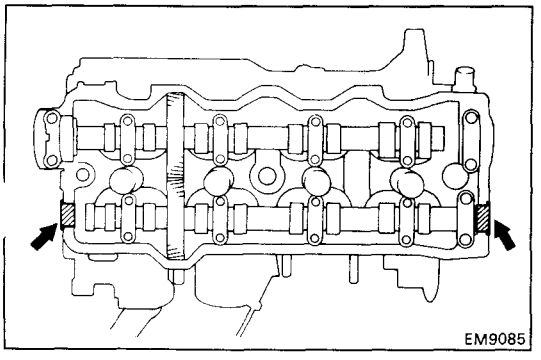

(c) Install the two semi-circular plugs to the cylinder head.

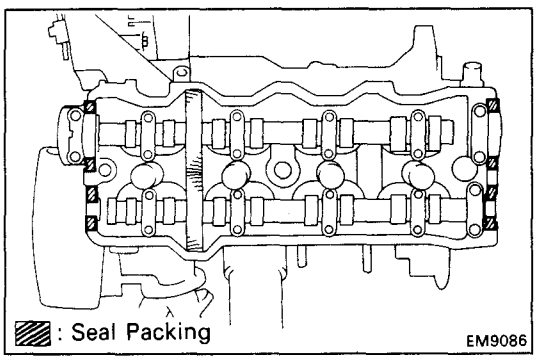

7. **INSTALL CYLINDER HEAD COVER**
   (a) Remove any old packing (FIPG) material.
   (b) Apply seal packing to the cylinder head as shown in the figure.
   Seal packing: Part No. 08826-00080 or equivalent

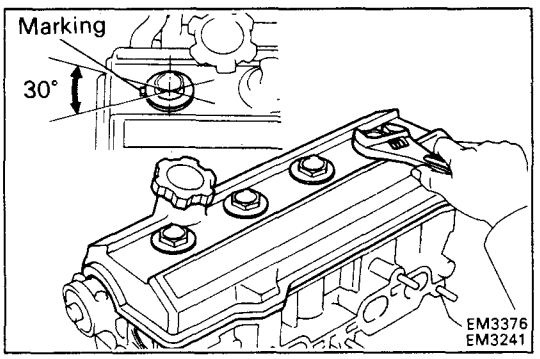

   (c) Install the gasket to the head cover.
   (d) Install the head cover with the four grommets and nuts.
   Torque: 180 kg-cm (13 ft-lb, 18 N·m)
   HINT: Install the grommets so that its markings are as shown in the illustration. Then install the grommet to its original position.

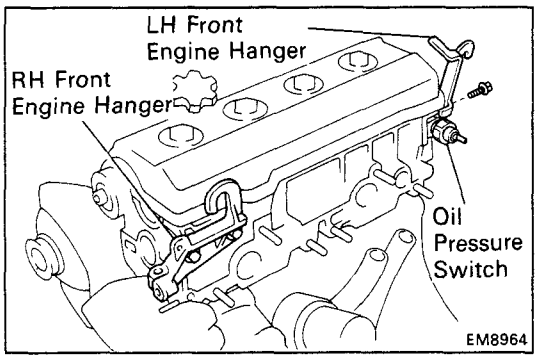

8. **INSTALL OIL PRESSURE SWITCH**
   Apply adhesive to two or three threads.
   Adhesive: Part No. 08833-00080, THREE BOND 1324 or equivalent

9. **INSTALL RH FRONT ENGINE HANGER**
   Install the engine hanger with the two bolts.
   Torque: 250 kg-cm (18 ft-lb, 25 N·m)

10. **INSTALL LH FRONT ENGINE HANGER**
    Install the engine hanger with the bolt.
    Torque: 250 kg-cm (18 ft-lb, 25 N·m)

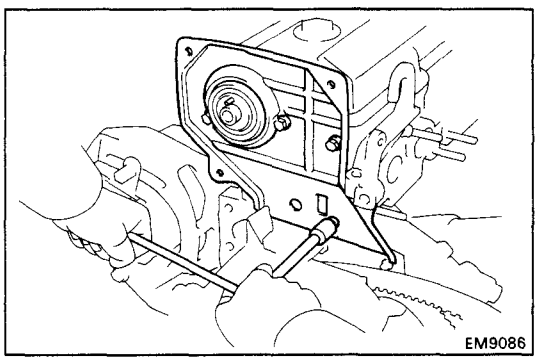

11. **INSTALL NO.3 TIMING BELT COVER**
    Install the timing belt cover with the four bolts.
    Torque: 80 kg-cm (69 in.-lb, 7.8 N·m)

12. **INSTALL NO.1 IDLER PULLEY AND TENSION SPRING**
    (See step 4 on page EM-55)

13. **INSTALL CAMSHAFT TIMING PULLEY**
    (See steps 9 to 17 on pages EM-56 to 59)

14. **INSTALL INJECTOR AND DELIVERY PIPE**
    (See steps 1 and 3 to 6 on pages FI-125 to 127)

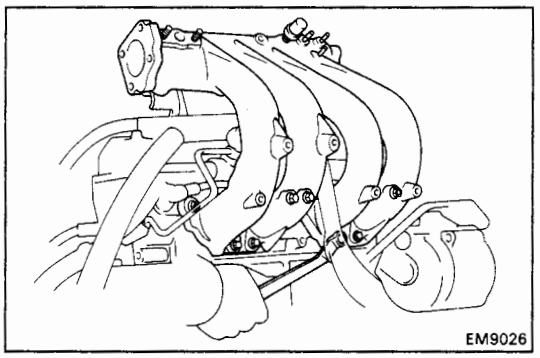

15. INSTALL INTAKE MANIFOLD

(a) Install a new gasket and the intake manifold with the six bolts and two nuts.

Torque: 195 kg-cm (14 ft-lb, 19 N·m)

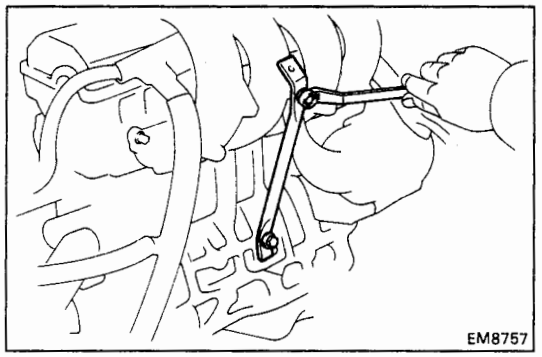

(b) Install the manifold stay with the two bolts.

Torque:

12 mm head bolt	**195 kg-cm (14 ft-lb, 19 N·m)**
14 mm head bolt	**425 kg-cm (31 ft-lb, 42 N·m)**

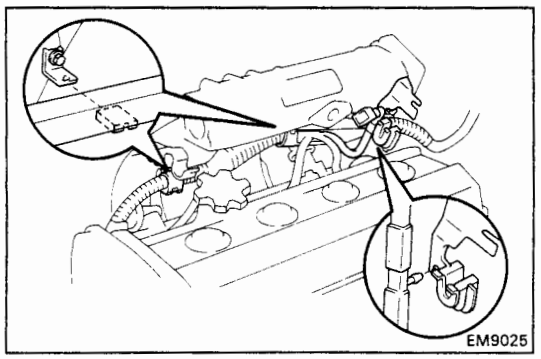

(c) Connect the two wire clamps to the wire bracket.

(d) Connect the wire clamp to the accelerator bracket.

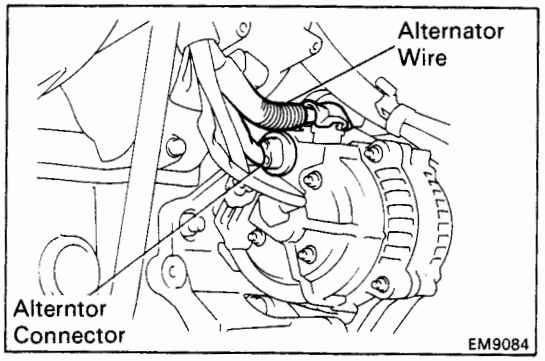

(e) Connect the alternator connector and wire.

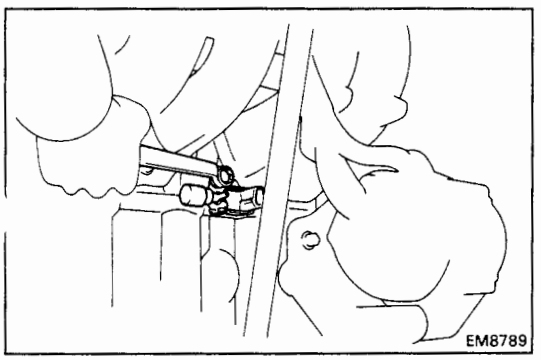

16. INSTALL EGR VSV

(a) Install the VSV with the bolt.

(b) Connect the VSV connector.

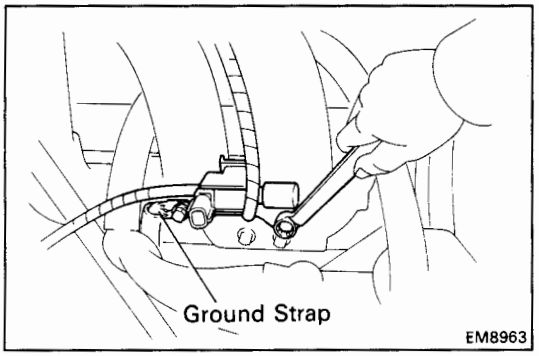

17. INSTALL FUEL PRESSURE VSV

(a) Install the VSV with the two bolts. Connect the ground strap.

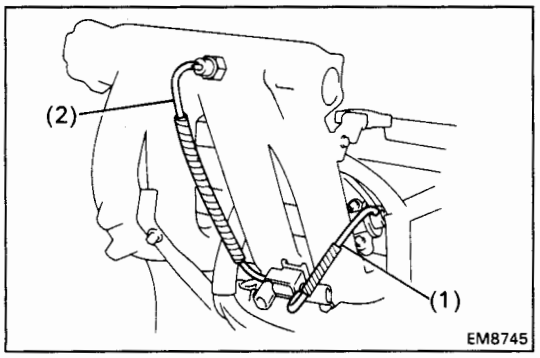

(b) Connect the following hoses:
  (1) Vacuum hose from fuel pressure regulator
  (2) Vacuum hose from intake manifold

(c) Connect the VSV connector.

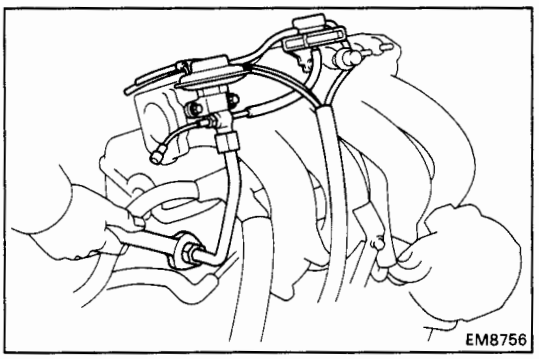

18. INSTALL EGR VALVE AND VACUUM MODULATOR

(a) Install a new gasket and the EGR valve with the union nut and two bolts.

Torque:

Union nut	**600 kg-cm (43 ft-lb, 59 N·m)**
Bolt	**130 kg-cm (9 ft-lb, 13 N·m)**

(b) Install the EGR modulator to the clamp.

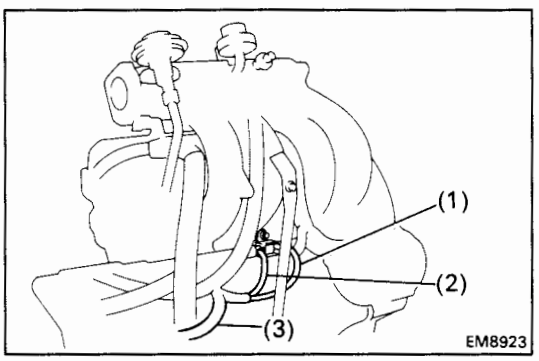

(c) Connect the following hoses:
  (1) Vacuum hose (from Q port of EGR vacuum modulator) to G port of EGR VSV
  (2) Vacuum hose (from EGR valve) to E port of EGR VSV
  (3) Vacuum hose to charcoal canister

(d) (CALIF. only)
Connect the EGR gas temperature sensor connector.

19. INSTALL COLD START INJECTOR
(See steps 1 and 3 on page FI-104)

20. INSTALL COLD START INJECTOR PIPE
(See step 2 on page FI-104)

21. INSTALL THROTTLE BODY
(See steps 2 to 5 on pages FI-146 and 147)

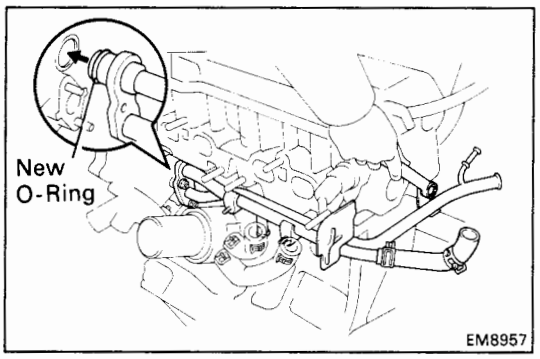

22. INSTALL WATER BY-PASS PIPE

(a) Install a new O-ring to the by-pass pipe.

(b) Apply soapy water on the O-ring.

(c) Install a new gasket and the by-pass pipe with the two nuts and two bolts.

Torque(Nut): 95 kg-cm (82 in.-lb, 9.3 N·m)

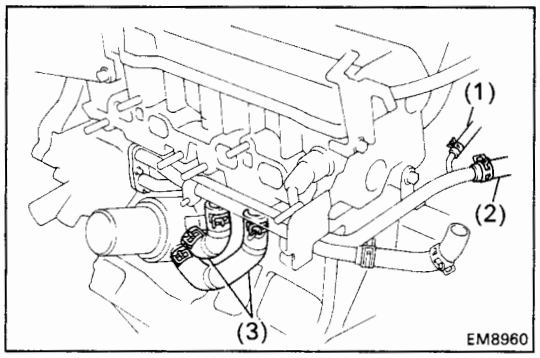

(d) Connect the following hoses:

(1) ISC water by-pass hose

(2) Heater water hose

(3) Two oil cooler water by-pass hoses

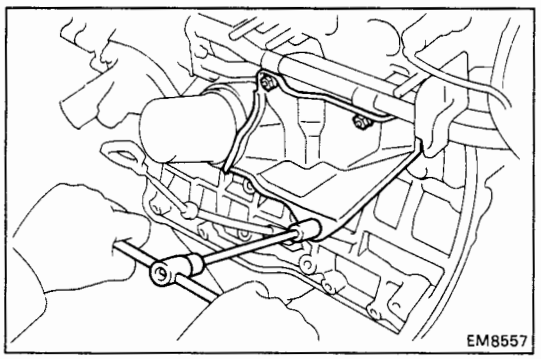

(e) Install the oil cooler heat protector with the bolt and two nuts.

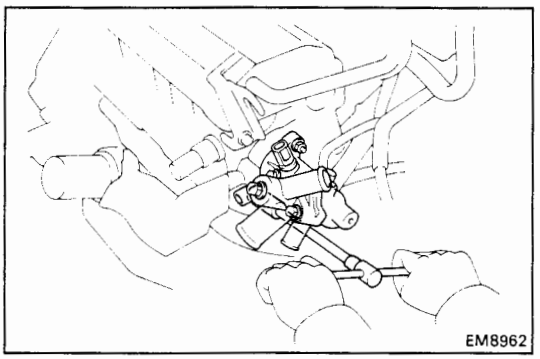

23. INSTALL WATER OUTLET AND HOUSING

(a) Install a new gasket, the water outlet and housing assembly with the two bolts.

Torque: 150 kg-cm (11 ft-lb, 15 N·m)

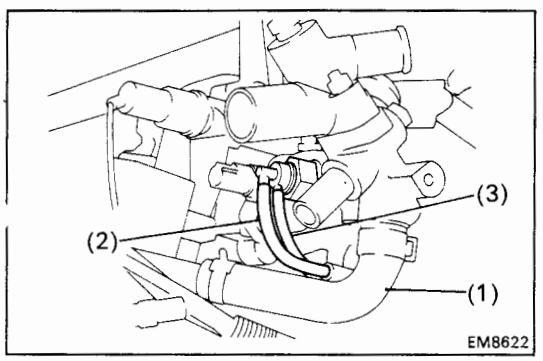

(b) Connect the following hoses:

(1) Water by-pass pipe hose

(2) EVAP BVSV vacuum hose (from P port of throttle body)

(3) EVAP BVSV vacuum hose (from charcoal canister)

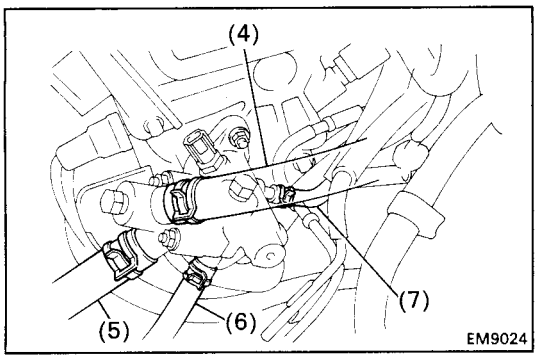

(4) Water filler hose
(5) Radiator hose
(6) Heater water hose
(7) ISC water by-pass hose

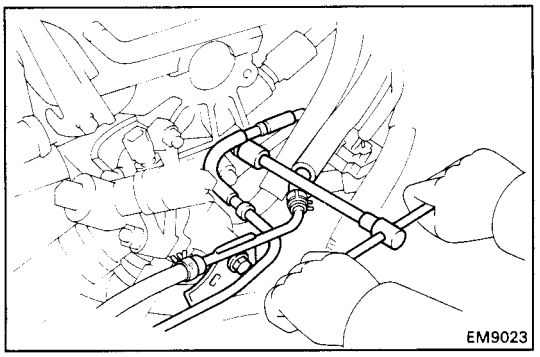

(c) Install the fuel inlet hose (with the return tube) from the water outlet and cylinder head.

(d) Connect the following connectors:
- Water temperature sender gauge connector
- Water temperature sensor connector
- Cold start injector time switch connector

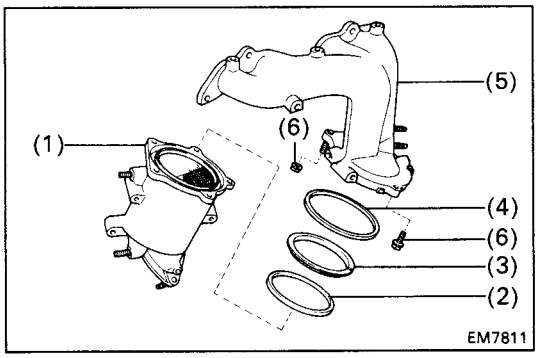

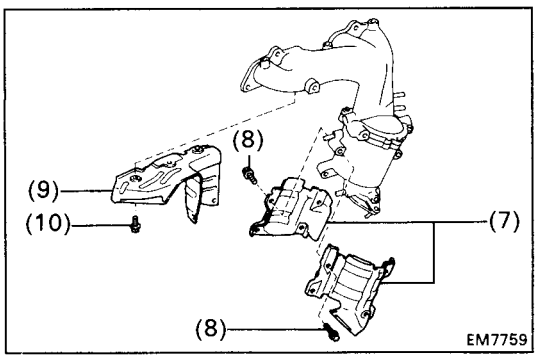

24. ASSEMBLE EXHAUST MANIFOLD AND CATALYTIC CONVERTER

Assemble the following parts:

(1) Catalytic converter
(2) Cushion
(3) Retainer
(4) Gasket
(5) Exhaust manifold
(6) Three bolts and two nuts

Torque: 300 kg-cm (22 ft-lb, 29 N·m)

(7) Two converter heat insulators
(8) Eight bolts
(9) Manifold lower heat insulator
(10) Five bolts

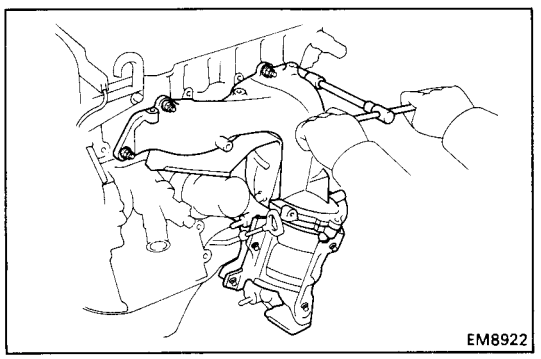

25. INSTALL EXHAUST MANIFOLD AND CATALYTIC CONVERTER ASSEMBLY

(a) Install a new gasket, the exhaust manifold and catalytic converter assembly with the new six nuts.

Torque: 500 kg-cm (36 ft-lb, 49 N·m)

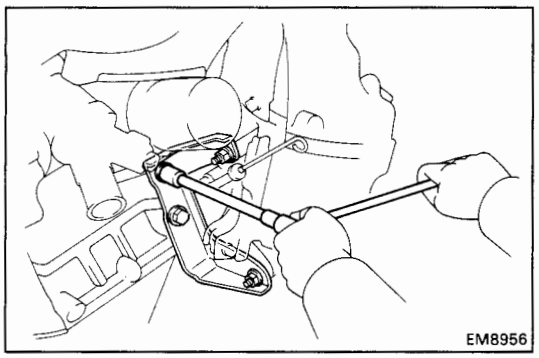

(b) Install the catalytic converter stay with the two bolts and two new nuts.

Torque: 425 kg-cm (31 ft-lb, 42 N·m)

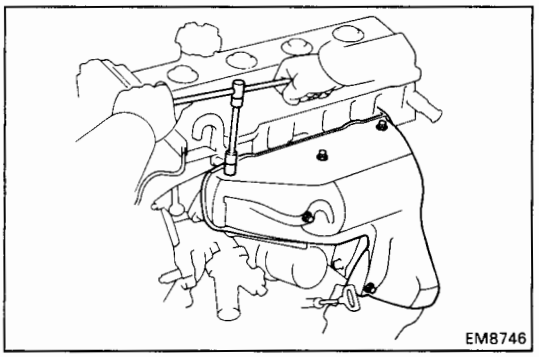

(c) Install the manifold upper heat insulator with the six bolts.

(d) Connect the oxygen sensor (main) connector.

(e) (CALIF. only)
Connect the sub-oxygen sensor connector.

26. INSTALL FRONT EXHAUST PIPE
(See step 15 on page EM-197)

27. INSTALL DISTRIBUTOR
(See steps 1 to 4 on page IG-21 and 22)

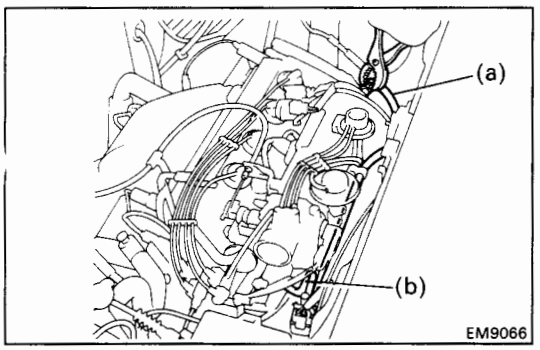

28. CONNECT VACUUM HOSES

(a) A/C VSV vacuum hose from intake manifold

(b) A/C VSV air hose from ISC valve

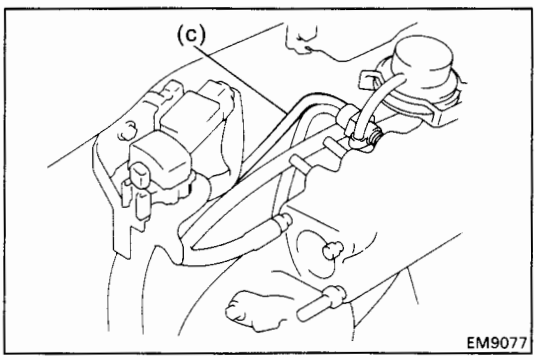

(c) Vacuum sensor hose from intake manifold

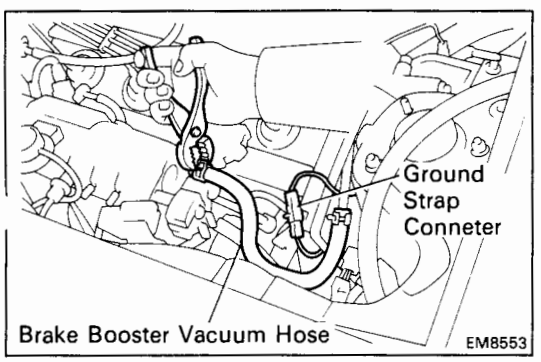

(d) Brake booster vacuum hose from intake manifold

29. CONNECT GROUND STRAP CONNECTOR

30. **INSTALL AIR CLEANER CAP**
(See page 35 on page EM-226)

31. **INSTALL CRUISE CONTROL ACTUATOR (w/ CRUISE CONTROL SYSTEM) AND ACCELERATOR LINKAGE**
(See step 33 on page EM-225)

32. **INSTALL ACCELERATOR CABLE, AND ADJUST IT**

33. **(A/T)**
CONNECT THROTTLE CABLE, AND ADJUST IT

34. **INSTALL SUSPENSION UPPER BRACE**
(See step 36 on page EM-226)

35. **CONNECT CABLE TO NEGATIVE TERMINAL OF BATTERY**

36. **FILL WITH ENGINE COOLANT (See page CO-7)**

    Capacity (w/ Heater):
    13.0 liters (13.7 US qts, 11.4 Imp. qts)

37. **START ENGINE AND CHECK FOR LEAKS**

38. **ADJUST IGNITION TIMING**
(See steps 9 to 13 on pages IG-21 and 22)

    Ignition timing:
    10°BTDC @ idle
    (w/ Terminals TE1 and E1 connected)

39. **INSTALL ENGINE HOOD SIDE PANELS**

40. **INSTALL ENGINE UNDER COVER**

41. **PERFORM ROAD TEST**

    Check for abnormal noise, shock, slippage, correct shift points and smooth operation.

42. **RECHECK ENGINE COOLANT LEVEL AND OIL LEVEL**

CYLINDER BLOCK (3S-GTE)

COMPONENTS

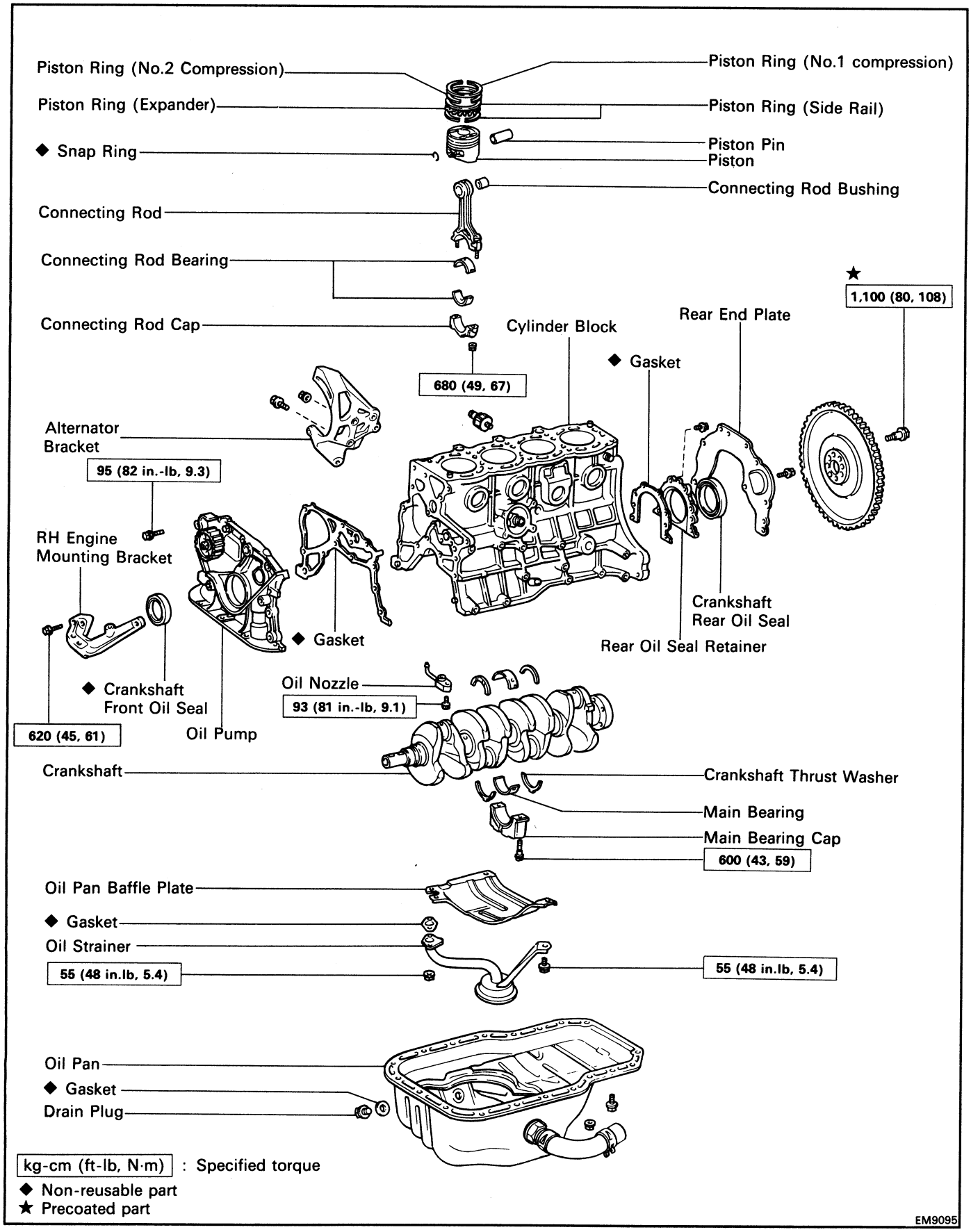

REMOVAL OF ENGINE

1. **DISCONNECT CABLE FROM NEGATIVE TERMINAL OF BATTERY**

   CAUTION: Work must be started after approx. 20 seconds or longer from the time the ignition switch is turned to the "LOCK" position and the negative (–) terminal cable is disconnected from the battery.

2. **REMOVE ENGINE HOOD**

3. **REMOVE ENGINE HOOD SIDE PANELS**

4. **REMOVE ENGINE UNDER COVERS**

5. **DRAIN ENGINE COOLANT (See page CO-6)**

6. **DRAIN ENGINE OIL (See page LU-7)**

7. **DRAIN TRANSAXLE OIL**

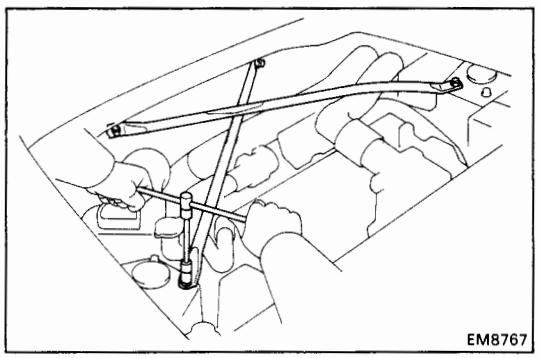

8. **REMOVE SUSPENSION UPPER BRACE**

   Remove the two bolts, two nuts and upper brace.

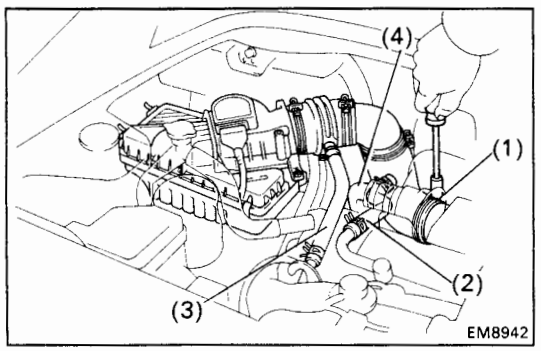

9. **REMOVE AIR CLEANER**

   (a) Disconnect the air flow meter connector.

   (b) Disconnect the four air cleaner cap clips.

   (c) Disconnect the following hoses:

   (1) Air cleaner hose from turbocharger

   (2) PCV hose from cylinder head cover

   (3) Air hose from No.2 air tube

   (4) Air hose from air by-pass valve

   (d) Remove the air cleaner cap, air flow meter assembly and element.

   (e) Remove the three bolts and air cleaner case.

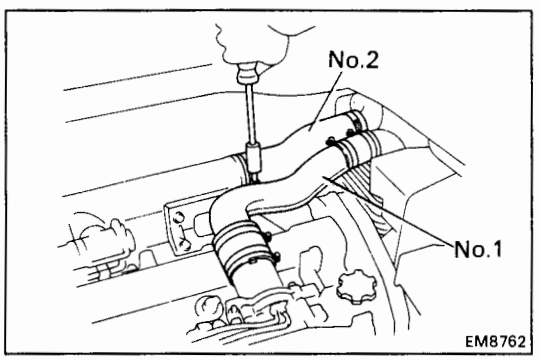

10. **REMOVE NO.1 AIR INTAKE CONNECTOR**

11. **REMOVE NO.2 AIR INTAKE CONNECTOR**

12. **DISCONNECT ACCELERATOR CABLE FROM THROTTLE BODY**

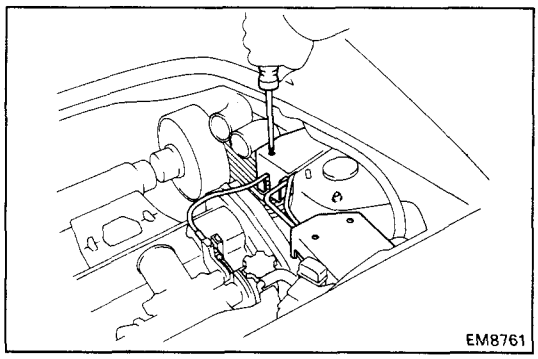

13. REMOVE CRUISE CONTROL ACTUATOR (w/ CRUISE CONTROL SYSTEM) AND LINKAGE

(a) Remove the two screws and actuator cover.

(b) Remove the screw and accelerator linkage cover.

(c) Remove the three bolts and actuator.

(d) Disconnect the actuator connector

(e) Remove the three bolts and accelerator linkage.

(f) Disconnect the cable from the accelerator linkage.

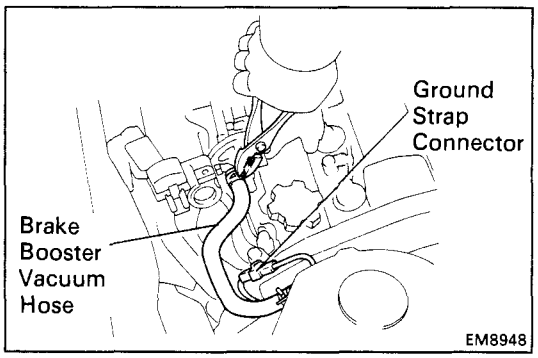

14. DISCONNECT BRAKE BOOSTER VACUUM HOSE

15. DISCONNECT GROUND STRAP CONNECTOR

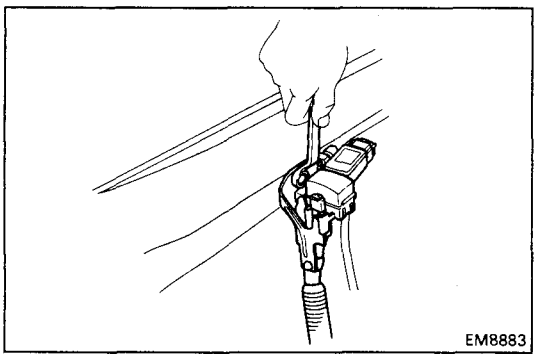

16. REMOVE CHECK CONNECTOR AND TURBOCHARGING PRESSURE SENSOR

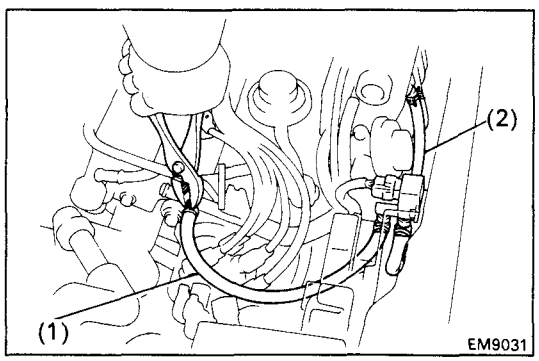

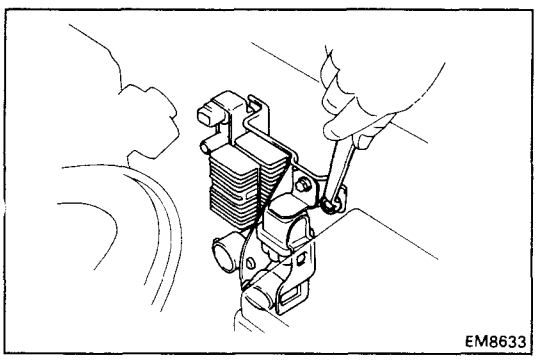

17. REMOVE INJECTOR SOLENOID RESISTOR, FUEL PUMP RELAY, FUEL PUMP RESISTOR AND A/C VSV

(a) Disconnect the following connectors:

- Solenoid resistor connector
- Fuel pump relay connector
- Fuel pump resistor connector
- A/C VSV connector

(b) Disconnect the following hoses:

(1) A/C VSV air hose from No.2 air tube

(2) A/C VSV vacuum hose from intake manifold

(c) Remove the two bolts, A/C VSV, the solenoid resistor and fuel pump relay, fuel pump resistor assembly.

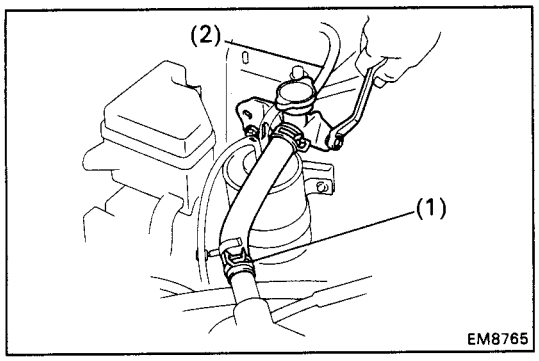

18. REMOVE WATER FILLER

(a) Disconnect the following hose:

(1) Water filler hose

(2) Coolant reservoir hose

(b) Remove the two bolts and water filler.

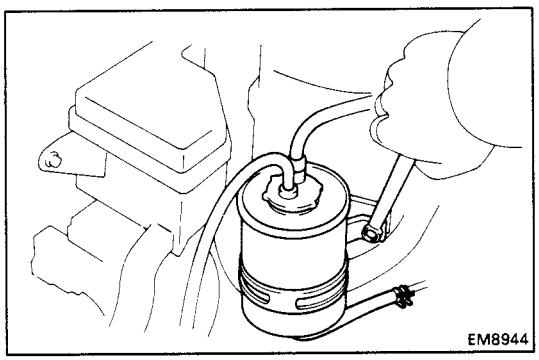

19. REMOVE CHARCOAL CANISTER

(a) Disconnect the three vacuum hoses.

(b) Remove the two bolts and charcoal canister.

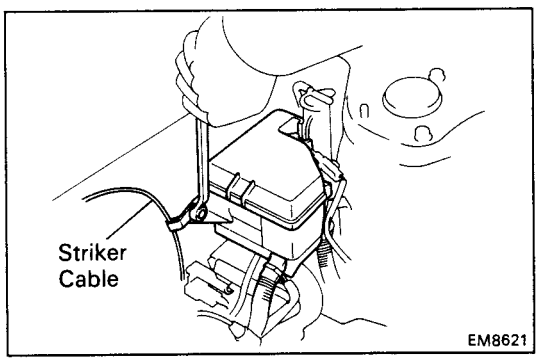

20. REMOVE ENGINE RELAY BOX, AND DISCONNECT ENGINE WIRE

(a) Remove the two bolts and relay box. Disconnect the luggage compartment striker cable

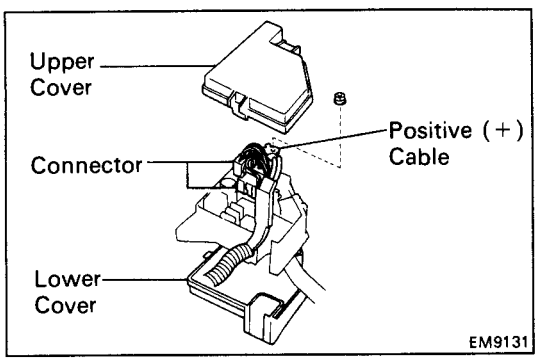

(b) Remove the upper and lower covers from the relay box.

(c) Disconnect the positive (+) cable and two connectors of the engine wire from the relay box.

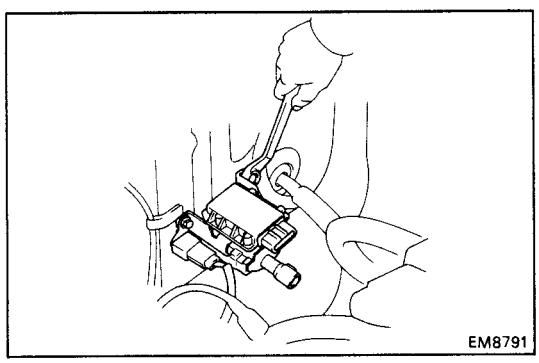

21. REMOVE IGNITION COIL AND IGNITER

(a) Disconnect the ignition coil connector.

(b) Disconnect the igniter connector.

(c) Disconnect the high-tension cord.

(d) Remove the two bolts, the ignition coil and igniter assembly. Disconnect the noise filter.

22. DISCONNECT ENGINE WIRE FROM LUGGAGE COMPARTMENT

(a) Disconnect the following connectors:

(1) Two engine ECU connectors

(2) Starter relay connector

(3) Engine compartment cooling fan relay connector

(4) Engine compartment wire connector

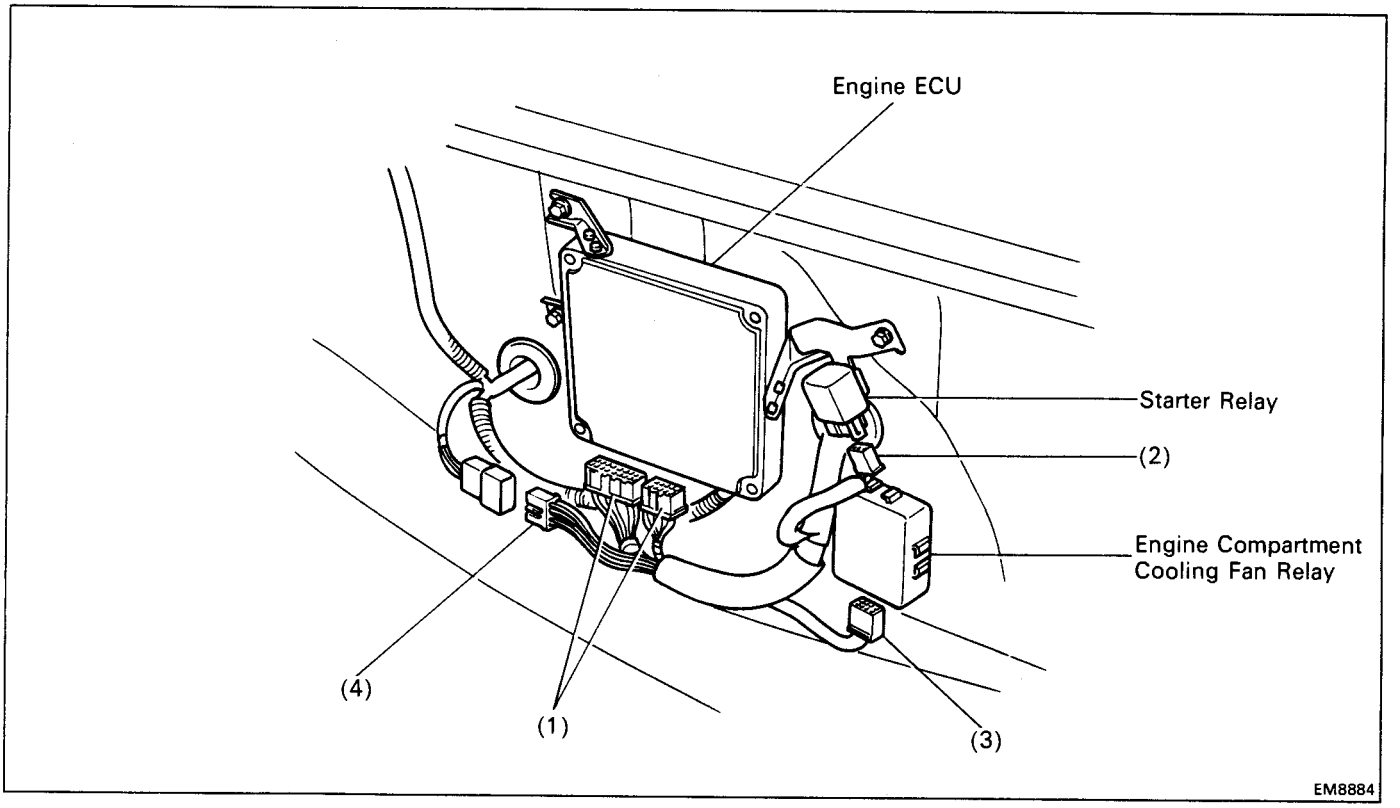

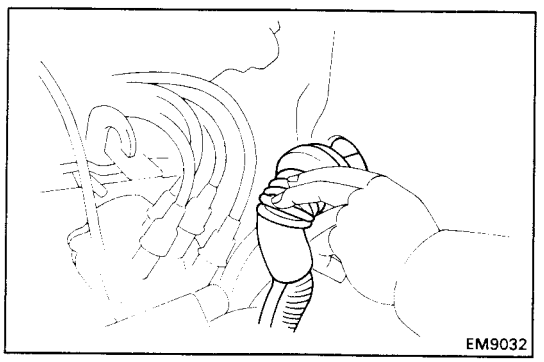

(b) Pull out the engine wire from the luggage compartment.

23. DISCONNECT STARTER CABLE

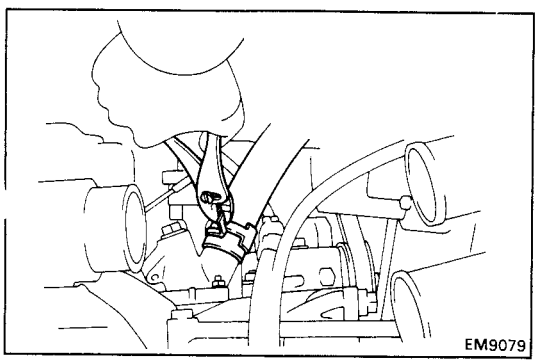

24. DISCONNECT RADIATOR HOSE FROM WATER INLET

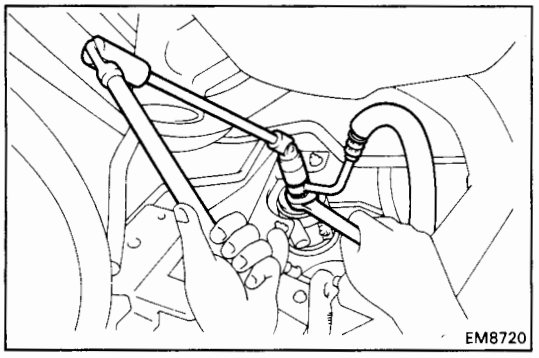

25. DISCONNECT FUEL INLET HOSE

CAUTION: Catch leaking fuel in a container.

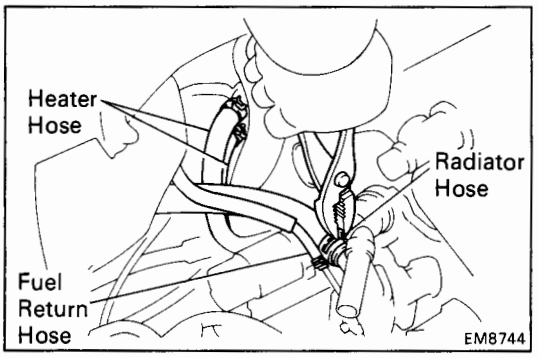

26. DISCONNECT FUEL RETURN HOSE

CAUTION: Catch leaking fuel in a container.

27. DISCONNECT RADIATOR HOSE FROM WATER OUTLET HOUSING

28. DISCONNECT HEATER HOSES

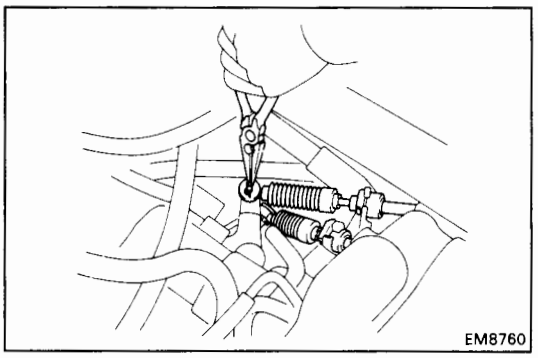

29. DISCONNECT TRANSAXLE CONTROL CABLES FROM TRANSAXLE

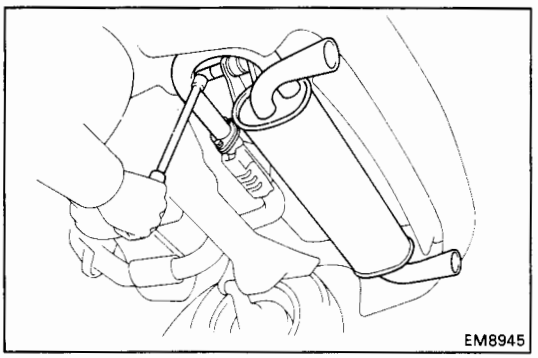

30. REMOVE TAILPIPE

(a) Remove the two bolts holding the front exhaust pipe to the tailpipe stopper bracket.

(b) Remove the two bolts holding the front exhaust pipe to the tailpipe. Remove the gasket.

(c) Remove the two through bolts holding the tailpipe to the tailpipe bracket.

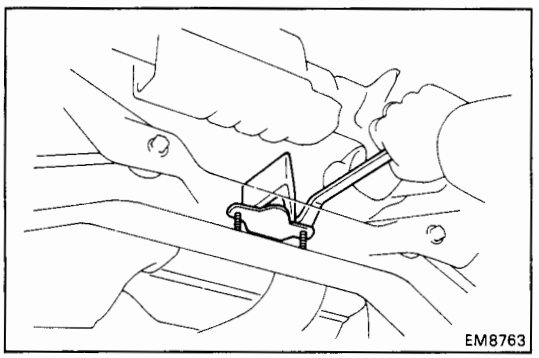

31. REMOVE FRONT EXHAUST PIPE

(a) Remove the two bolts and damper.

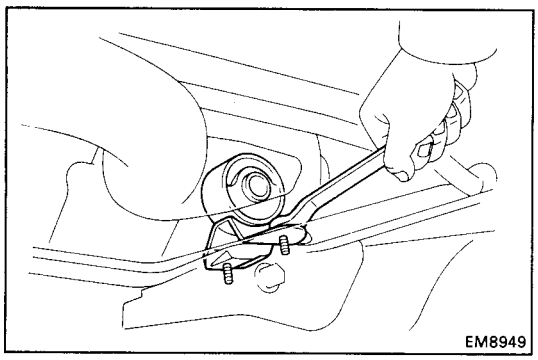

(b) Remove the two bolts and support bracket.

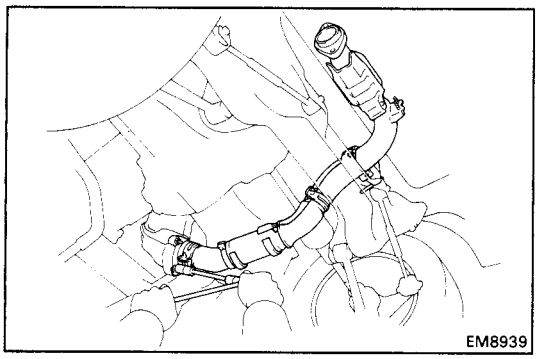

(c) Using a 14 mm deep socket wrench, remove the three nuts, exhaust pipe and gasket.

HINT: Passing the exhaust pipe rear side between the body and suspension crossmember is not easy, so follow the method shown in the illustration.

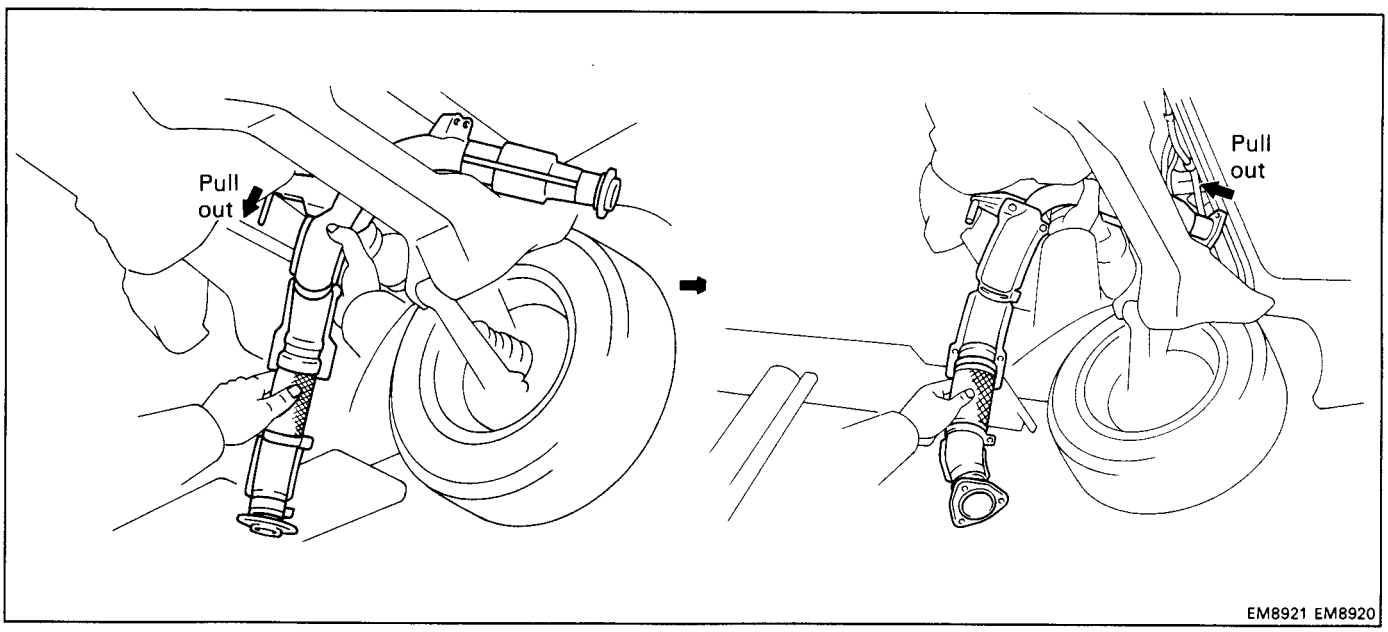

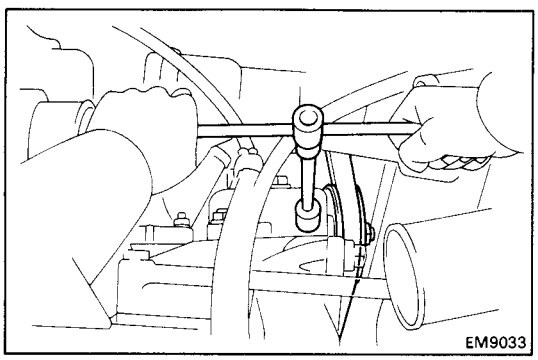

32. REMOVE ENGINE COMPARTMENT COOLING FAN (See steps 4 and 5 on page CO-34)

33. REMOVE IDLER PULLEY BRACKET AND A/C COMPRESSOR WITHOUT DISCONNECTING HOSES

(a) Disconnect the idler pulley bolt and adjusting bolt, and remove the drive belt.

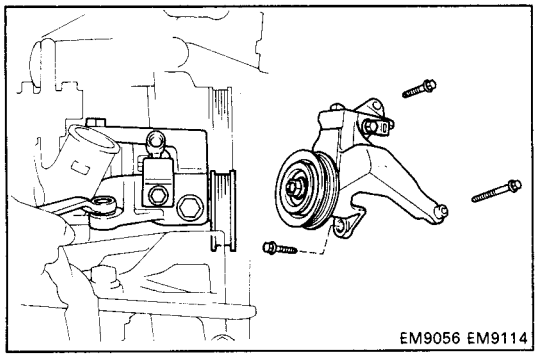

(b) Disconnect the A/C compressor connector.

(c) Remove the bolt and the wire clamp of the A/C compressor.

(d) Remove the three bolts and idler pulley bracket.

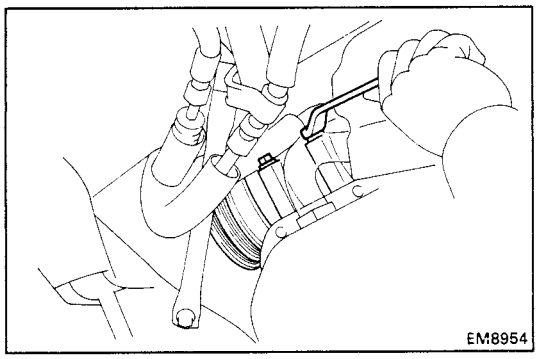

(e) Remove the two bolts, and disconnect the A/C compressor from the engine.

HINT: Put aside the compressor, and suspend it to the radiator support with a string.

34. REMOVE INTERCOOLER
(See steps 8 to 12 (a) and 13 on pages TC-21 and 22)

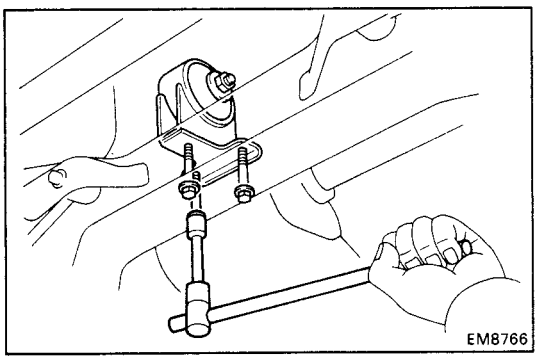

35. REMOVE REAR ENGINE MOUNTING INSULATOR

(a) Remove the through bolt holding the mounting insulator to the mounting bracket.

(b) Remove the three bolts and mounting insulator.

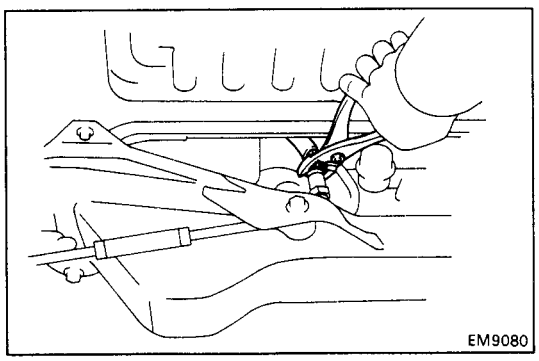

36. DISCONNECT SPEEDOMETER CABLE

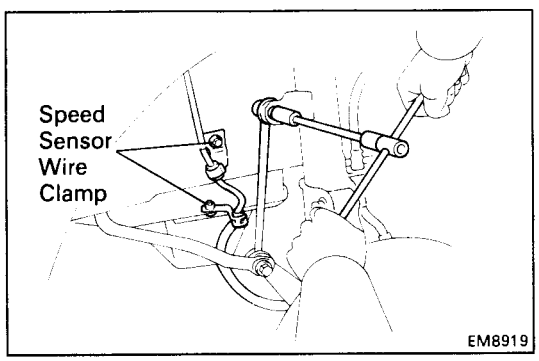

37. REMOVE REAR SUSPENSION CROSSMEMBER

(a) Remove the nut, and disconnect the stabilizer link from the shock absorber.

(b) Remove the bolt, and disconnect the wire clamp of the ABS speed sensor from the body.

(c) Remove the lower suspension arms.
(See page SA-76)

(d) Remove the drive shafts.
(See page SA-53 and 54)

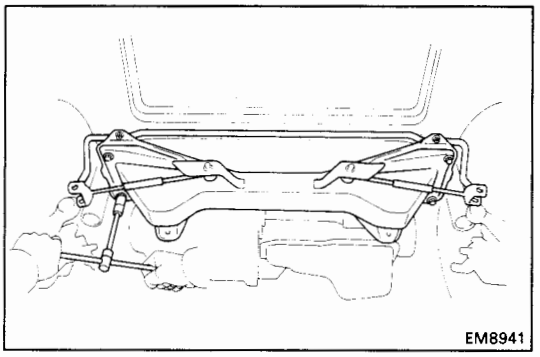

(e) Remove the four bolts and lower crossmember.

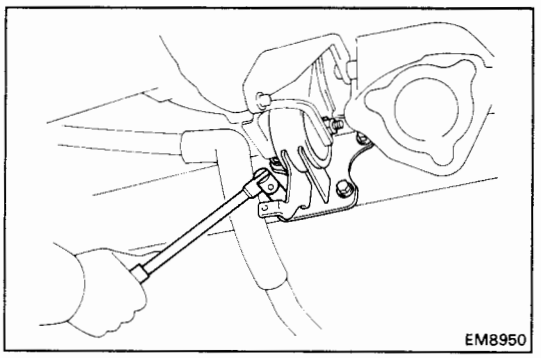

38. REMOVE FRONT ENGINE MOUNTING INSULATOR

(a) Remove the through bolt and nut holding the mounting insulator to the mounting bracket.

(b) Remove the four bolts and mounting insulator.

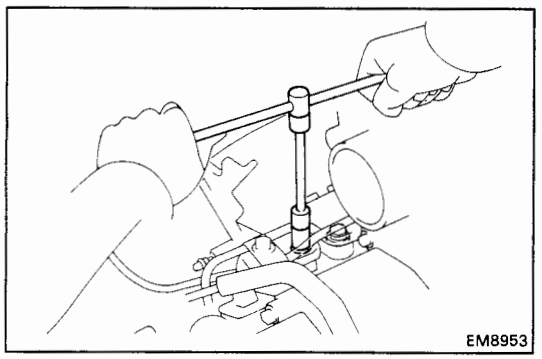

39. REMOVE FRONT ENGINE MOUNTING BRACKET AND CLUTCH RELEASE CYLINDER

(a) Remove the bolt and nut holding the clutch release cylinder to the transaxle.

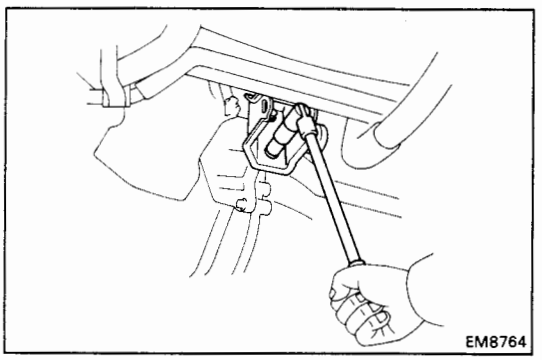

(b) Remove the two bolts and mounting bracket.

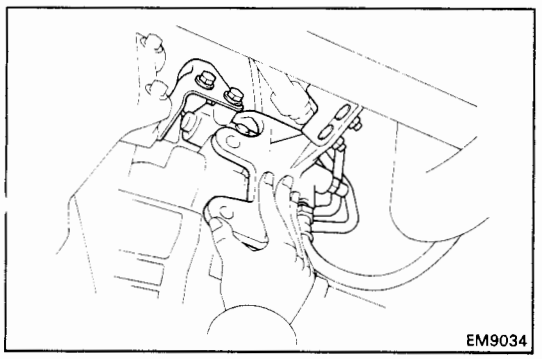

(c) Disconnect the clutch release cylinder without disconnecting the tubes.

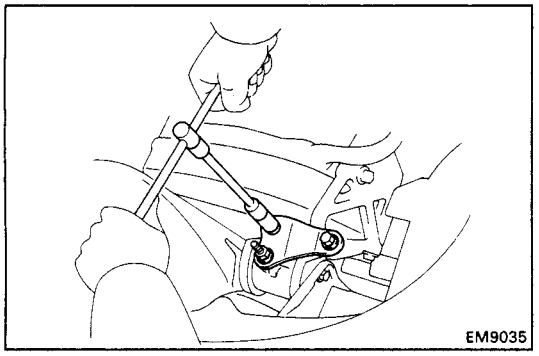

40. REMOVE RH ENGINE MOUNTING STAY

Remove the two bolts, nut and mounting stay.

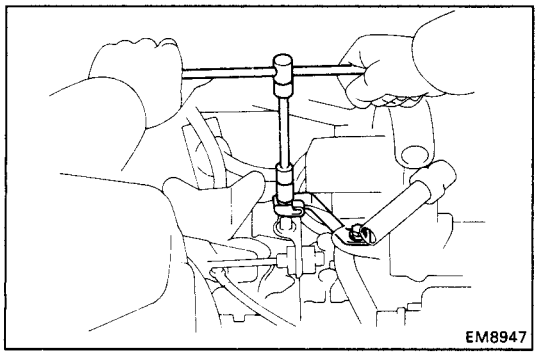

41. REMOVE LH ENGINE MOUNTING STAY

Remove the two bolts speedometer cable clamp and mounting stay.

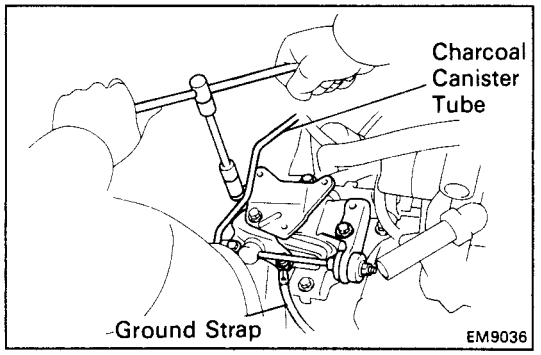

42. REMOVE LATERAL CONTROL ROD AND AIR CLEANER CASE BRACKET

Remove the five bolts, the control rod and case bracket. Disconnect the charcoal canister tube and ground strap (from the transaxle).

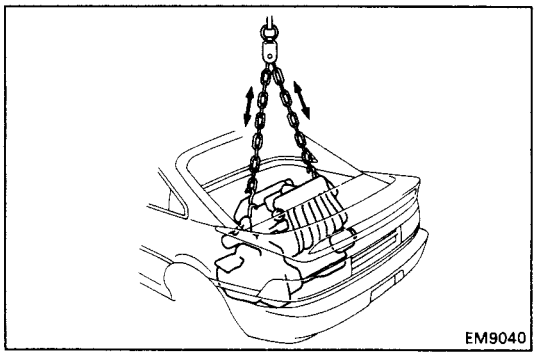

43. REMOVE ENGINE AND TRANSAXLE ASSEMBLY FROM VEHICLE

(a) Attach the engine chain hoist to the engine hangers.

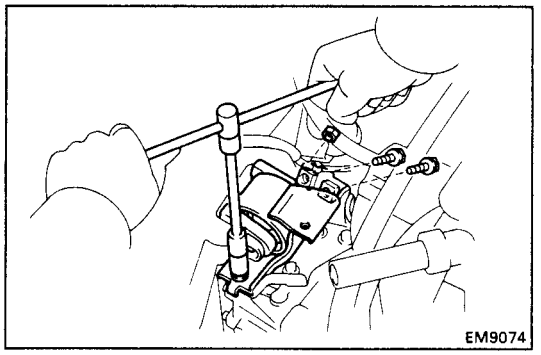

(b) Remove the through bolt, nut, three bolts and LH mounting insulator.

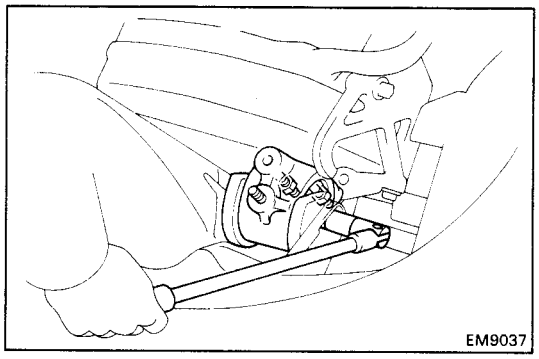

(c) Remove the through bolt, two nuts and RH mounting insulator.

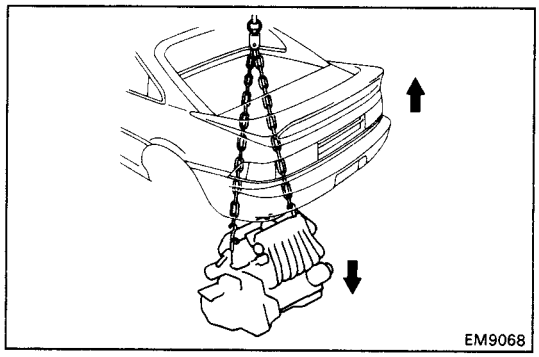

(d) Lower the engine out of the vehicle slowly and carefully, and raise the engine.

HINT: Make sure the engine is clear of all wiring, hoses and cables.

(e) Place the engine and transaxle assembly onto the stand.

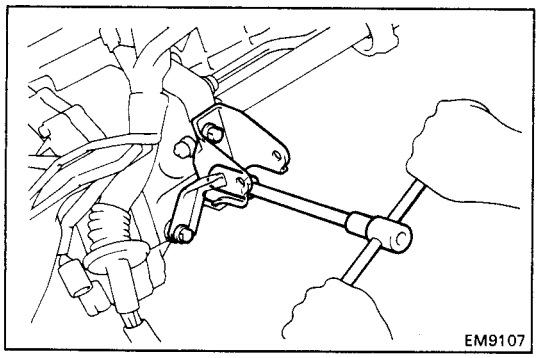

44. REMOVE ENGINE REAR ENGINE MOUNTING BRACKET

Remove the six bolts and mounting bracket.

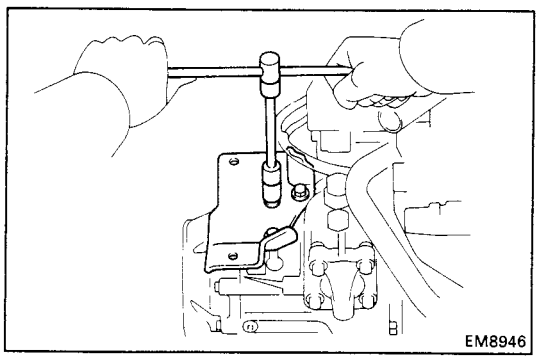

45. REMOVE LH ENGINE MOUNTING BRACKET

Remove the three bolts and mounting bracket.

46. REMOVE STARTER (See page ST-4)

47. SEPARATE ENGINE AND TRANSAXLE (See pages MT-5 and 6)

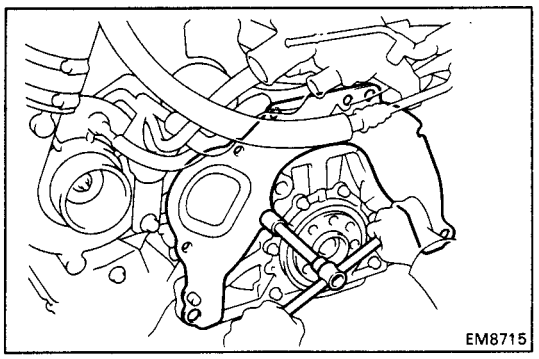

PREPARATION FOR DISASSEMBLY

1. **REMOVE CLUTCH COVER AND DISC**
2. **REMOVE FLYWHEEL**
3. **REMOVE REAR END PLATE**
   Remove the bolt and end plate.
4. **INSTALL ENGINE TO ENGINE STAND FOR DISASSEMBLY**

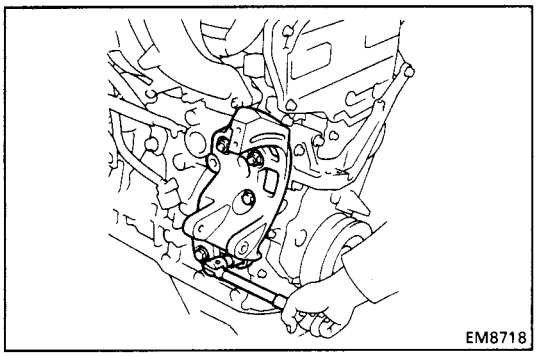

5. **REMOVE ALTERNATOR (See page CH-6)**
6. **REMOVE ALTERNATOR BRACKET**
   Remove the three bolts, two nuts and mounting bracket.

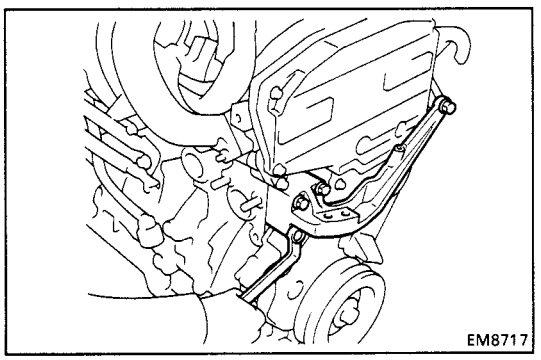

7. **REMOVE RH ENGINE MOUNTING BRACKET**
   Remove the four bolts and mounting bracket.
8. **REMOVE TIMING BELT AND PULLEYS (See pages EM-28 to 32)**
9. **REMOVE TURBOCHARGER (See pages TC-9 to 12)**
10. **REMOVE CYLINDER HEAD (See pages EM-63 to 71)**
11. **REMOVE WATER PUMP (See page CO-11)**
12. **REMOVE OIL PAN AND OIL PUMP (See pages LU-11 and 12)**
13. **REMOVE OIL FILTER (See page LU-7)**
14. **REMOVE OIL COOLER (See page LU-19)**

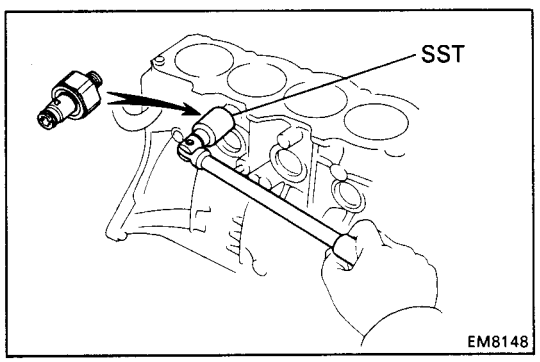

15. **REMOVE KNOCK SENSOR**
    Using SST, remove the knock sensor.
    SST 09816-30010

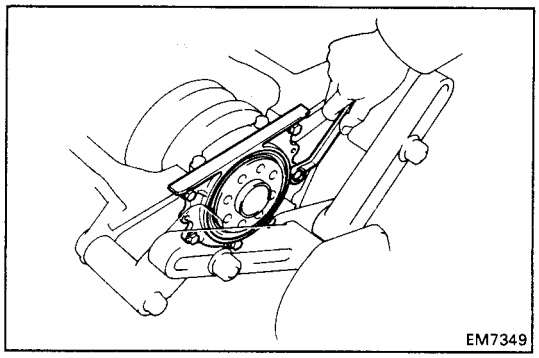

DISASSEMBLY OF CYLINDER BLOCK

(See page EM-133)

1. REMOVE REAR OIL SEAL RETAINER

Remove the six bolts, retainer and gasket.

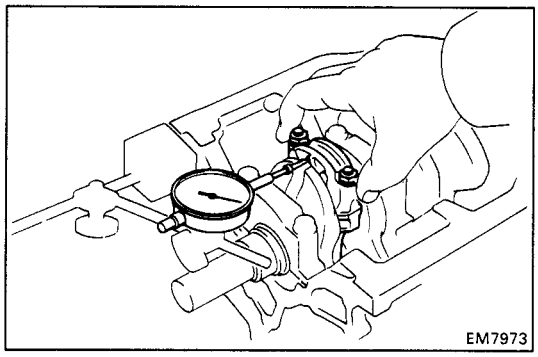

2. CHECK CONNECTING ROD THRUST CLEARANCE

Using a dial indicator, measure the thrust clearance while moving the connecting rod back and forth.

Standard thrust clearance: 0.160 – 0.312 mm (0.0063 – 0.0123 in.)

Maximum thrust clearance: 0.35 mm (0.0138 in.)

If the thrust clearance is greater than maximum, replace the connecting rod assembly. If necessary, replace the crankshaft.

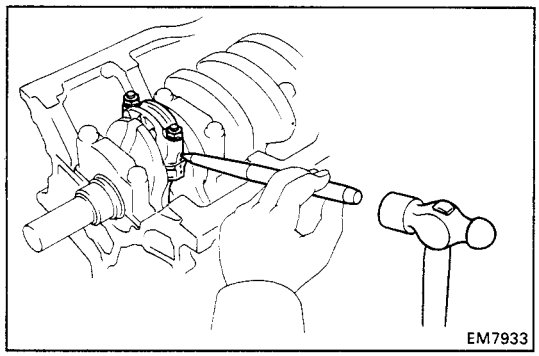

3. REMOVE CONNECTING ROD CAPS AND CHECK OIL CLEARANCE

(a) Using a punch or numbering stamp, place the matchmarks on the connecting rod and cap to ensure correct reassembly.

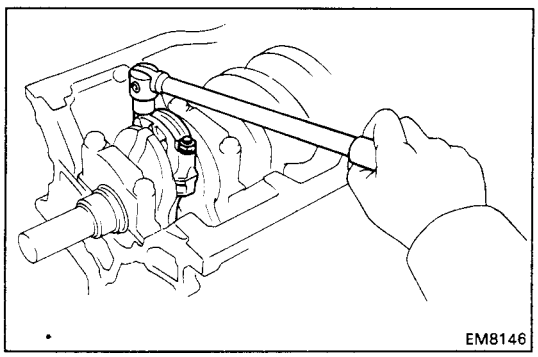

(b) Remove the connecting rod cap nuts.

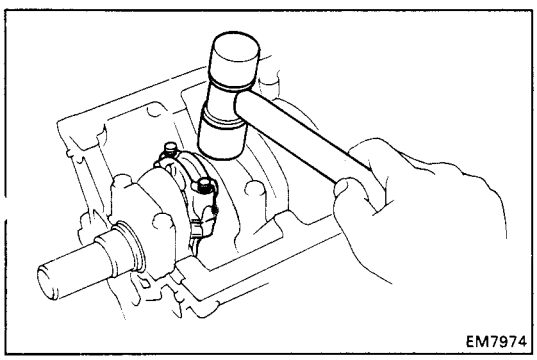

(c) Using a plastic-faced hammer, lightly tap the connecting rod bolts and lift off the connecting rod cap.

HINT: Keep the lower bearing inserted with the connecting cap.

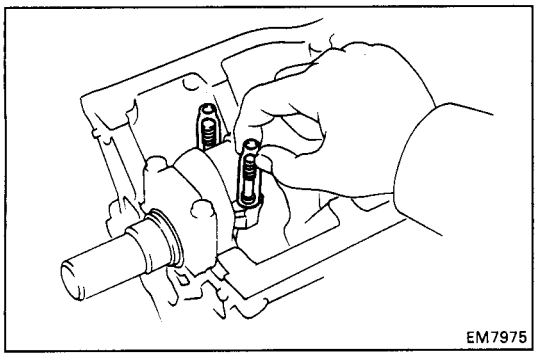

(d) Cover the connecting rod bolts with a short piece of hose to protect the crankshaft from damage.

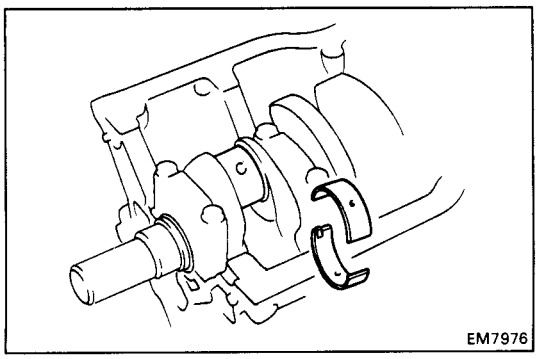

(e) Clean crank pin and bearing.

(f) Check the crank pin and bearing for pitting and scratches.

If the crank pin or bearing is damaged, replace the bearings. If necessary, grind or replace the crankshaft.

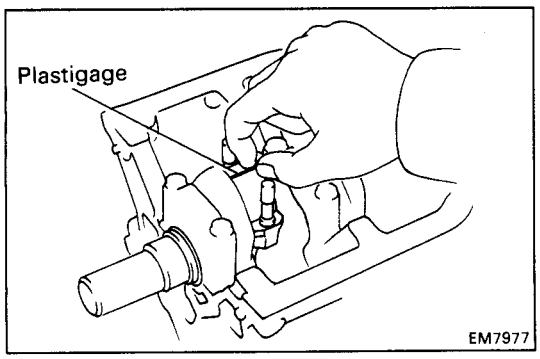

(g) Lay a strip of Plastigage across the crank pin.

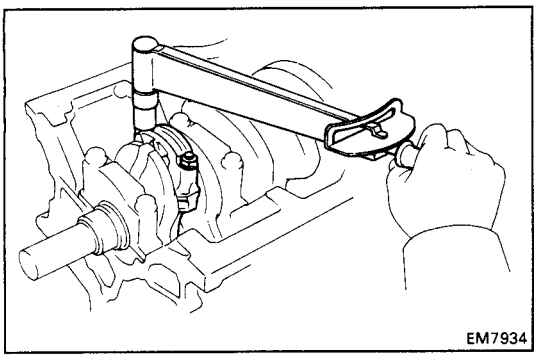

(h) Install the connecting rod cap.
(See step 7 on page EM-166)

Torque: 680 kg-cm (49 ft-lb, 67 N·m)

NOTICE: Do not turn the crankshaft.

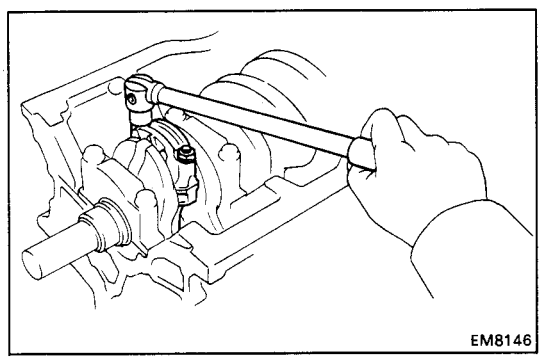

(i) Remove the connecting rod cap.
(See procedures (b) and (c) above)

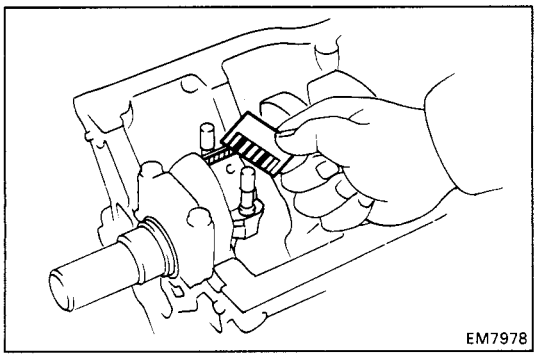

(j) Measure the Plastigage at its widest point.

Standard oil clearance:

STD	**0.024 – 0.055 mm (0.0009 – 0.0022 in.)**
U/S 0.25	**0.023 – 0.069 mm (0.0009 – 0.0027 in.)**

Maximum oil clearance: 0.08 mm (0.0031 in.)

If the oil clearance is greater than maximum, replace the bearings. If necessary, grind or replace the crankshaft.

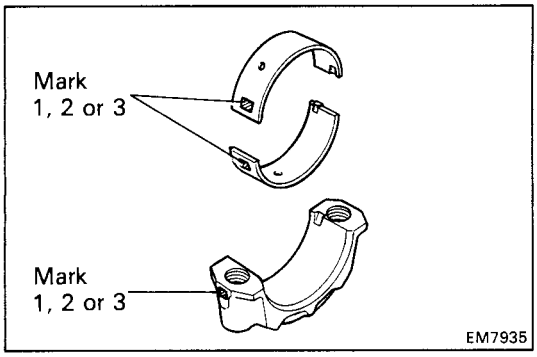

HINT: If using a standard bearing, replace it with one having the same number marked on the connecting rod cap. There are three sizes of standard bearings, marked "1", "2" and "3" accordingly.

Standard sized bearing center wall thickness:

Mark "1"	**1.484 – 1.488 mm (0.0584 – 0.0586 in.)**
Mark "2"	**1.488 – 1.492 mm (0.0586 – 0.0587 in.)**
Mark "3"	**1.492 – 1.496 mm (0.0587 – 0.0589 in.)**

(k) Completely remove the Plastigage.

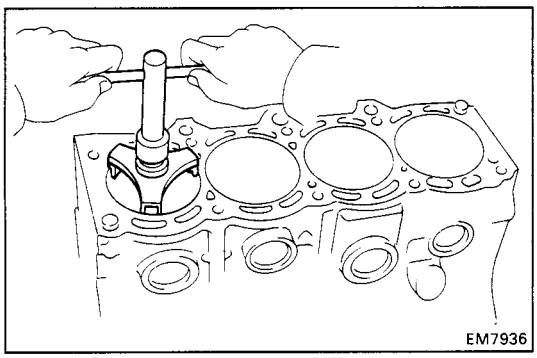

4. REMOVE PISTON AND CONNECTING ROD ASSEMBLIES

(a) Using a ridge reamer, remove all the carbon from the top of the cylinder.

(b) Cover the connecting rod bolts.
(See page EM-146)

(c) Push the piston, connecting rod assembly and upper bearing through the top of the cylinder block.

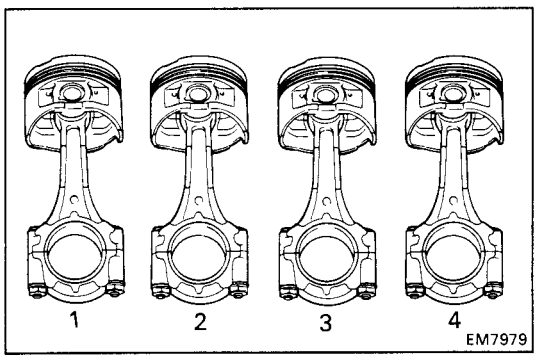

HINT:
- Keep the bearings, connecting rod and cap together.
- Arrange the piston and connecting rod assemblies in correct order.

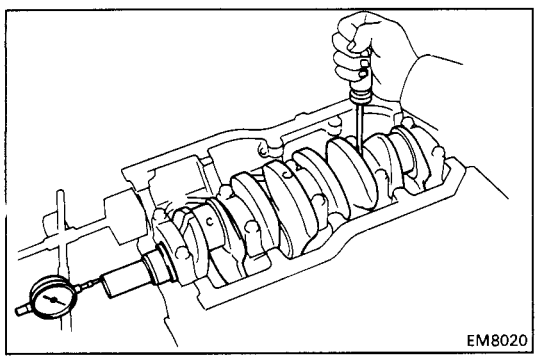

5. CHECK CRANKSHAFT THRUST CLEARANCE

Using a dial indicator, measure the thrust clearance while prying the crankshaft back and forth with a screwdriver.

Standard thrust clearance: 0.020 – 0.220 mm (0.0008 – 0.0087 in.)

Maximum thrust clearance: 0.30 mm (0.0118 in.

If the thrust clearance is greater than maximum, replace the thrust washers as a set.

Thrust washer thickness: 2.440 – 2.490 mm (0.0961 – 0.0980 in.)

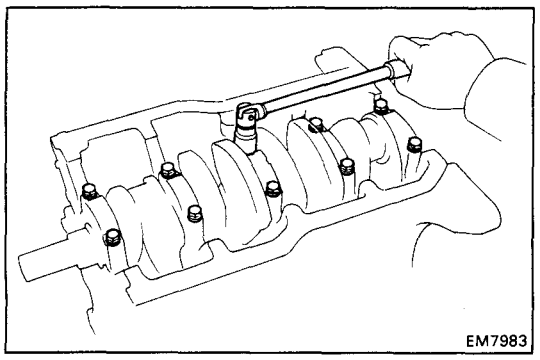

6. REMOVE MAIN BEARING CAPS AND CHECK OIL CLEARANCE

(a) Remove the main bearing cap bolts.

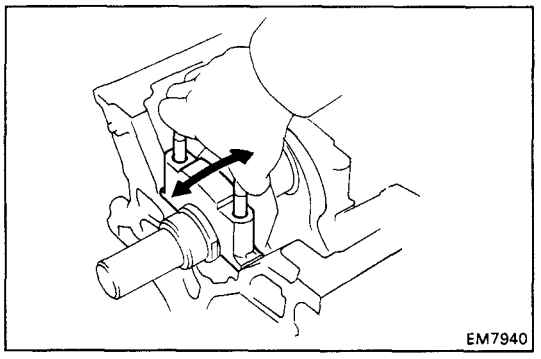

(b) Using the removed main bearing cap bolts, pry the main bearing cap back and forth, and remove the main bearing caps, lower bearings and lower thrust washers (No.3 main bearing cap only).

HINT:
- Keep the lower bearing and main bearing cap together.
- Arrange the main bearing caps and lower thrust washers in correct order.

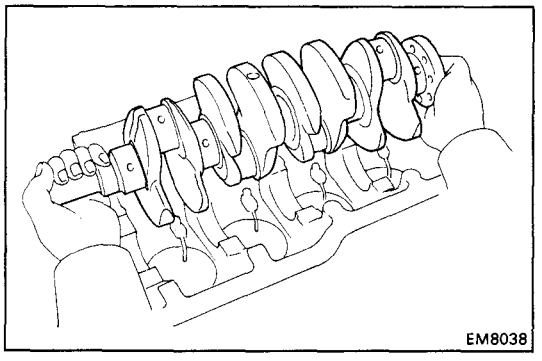

(c) Lift out the crankshaft.

HINT: Keep the upper bearing and upper thrust washers together with the cylinder block.

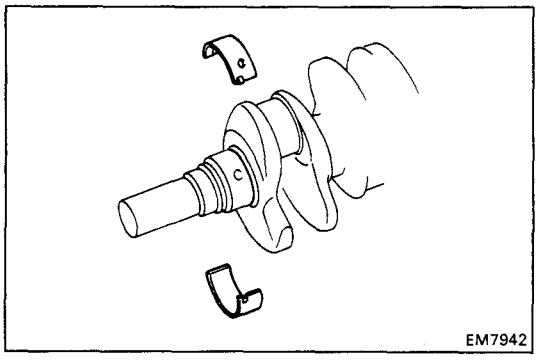

(d) Clean each main journal and bearing.

(e) Check each main journal and bearing for pitting and scratches.

If the journal or bearing is damaged, replace the bearings. If necessary, grind or replace the crankshaft.

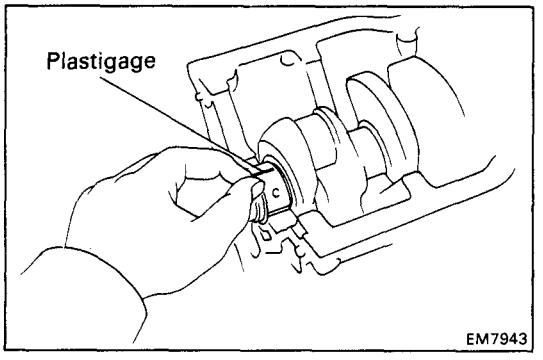

(f) Place the crankshaft on the cylinder block.

(g) Lay a strip of Plastigage across each journal.

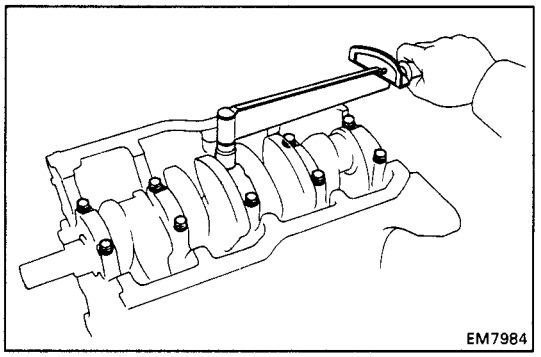

(h) Install the main bearing caps.
(See step 5 on page EM-165)

Torque: 600 kg-cm (43 ft-lb, 59 N·m)

NOTICE: Do not turn the crankshaft.

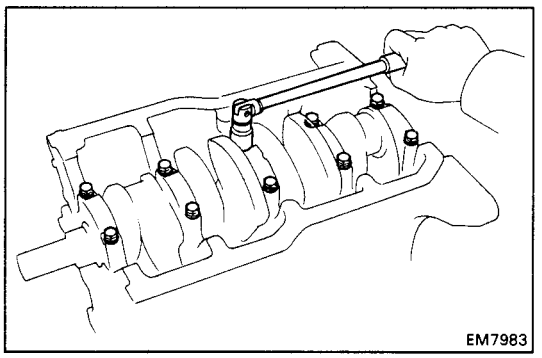

(i) Remove the main bearing caps.
(See procedures (a) and (b) above)

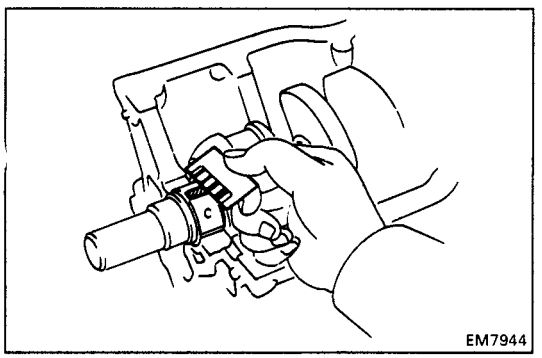

(j) Measure the Plastigage at its widest point.

Standard clearance:

No.3	**STD**	**0.025 – 0.044 mm (0.0010 – 0.0017 in.)**
	U/S 0.25	**0.021 – 0.061 mm (0.0008 – 0.0024 in.)**
Others	**STD**	**0.015 – 0.034 mm (0.0006 – 0.0013 in.)**
	U/S 0.25	**0.029 – 0.069 mm (0.0011 – 0.0027 in.)**

Maximum clearance: 0.08 mm (0.0031 in.)

HINT: If replacing the cylinder block subassembly, the bearing standard clearance will be:

No.3	**0.027 – 0.054 mm (0.0011 – 0.0021 in.)**
Others	**0.017 – 0.044 mm (0.0007 – 0.0017 in.)**

If the oil clearance is greater than maximum, replace the bearings. If necessary, grind or replace the crankshaft.

HINT: If using a standard bearing, replace it with one having the same number. If the number of the bearing cannot be determined, select the correct bearing by adding together the numbers imprinted on the cylinder block and crankshaft, then select the bearing with the same number as the total. There are five sizes of standard bearings, marked "1," "2," "3," "4" and "5" accordingly.

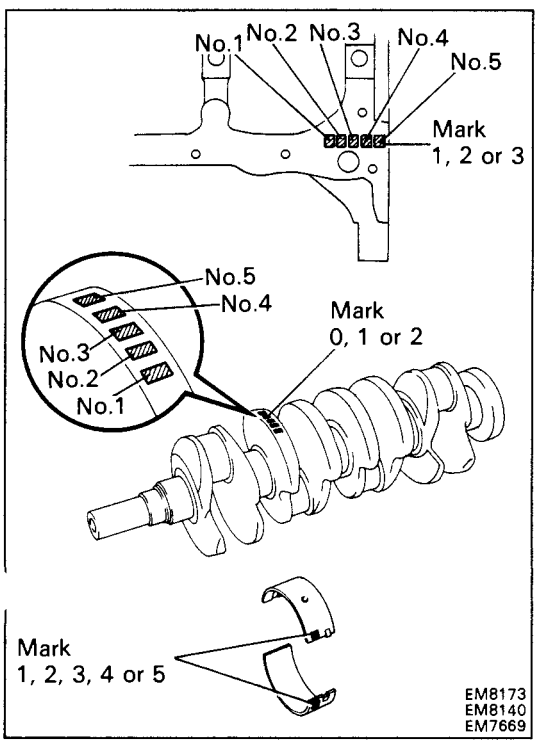

	Number marked								
Cylinder block	1			2			3		
Crankshaft	0	1	2	0	1	2	0	1	2
Bearing	1	2	3	1	2	3	1	2	3

EXAMPLE: Cylinder block "2" + Crankshaft "1" = Bearing "3"

(Reference)

Cylinder block main journal bore diameter:

Mark "1"	59.020 – 59.026 mm (2.3236 – 2.3239 in.)
Mark "2"	59.026 – 59.032 mm (2.3239 – 2.3241 in.)
Mark "3"	59.032 – 59.038 mm (2.3241 – 2.3243 in.)

Crankshaft journal diameter:

Mark "0"	54.998 – 55.003 mm (2.1653 – 2.1655 in.)
Mark "1"	54.993 – 54.998 mm (2.1651 – 2.1653 in.)
Mark "2"	54.988 – 54.993 mm (2.1649 – 2.1651 in.)

Standard sized bearing center wall thickness:

No.3	Mark "1"	1.992 – 1.995 mm (0.0784 – 0.0785 in.)
	Mark "2"	1.995 – 1.998 mm (0.0785 – 0.0787 in.)
	Mark "3"	1.998 – 2.001 mm (0.0787 – 0.0788 in.)
	Mark "4"	2.001 – 2.004 mm (0.0788 – 0.0789 in.)
	Mark "5"	2.004 – 2.007 mm (0.0789 – 0.0790 in.)
Others	Mark "1"	1.997 – 2.000 mm (0.0786 – 0.0787 in.)
	Mark "2"	2.000 – 2.003 mm (0.0787 – 0.0789 in.)
	Mark "3"	2.003 – 2.006 mm (0.0789 – 0.0790 in.)
	Mark "4"	2.006 – 2.009 mm (0.0790 – 0.0791 in.)
	Mark "5"	2.009 – 2.012 mm (0.0791 – 0.0792 in.)

(k) Completely remove the Plastigage.

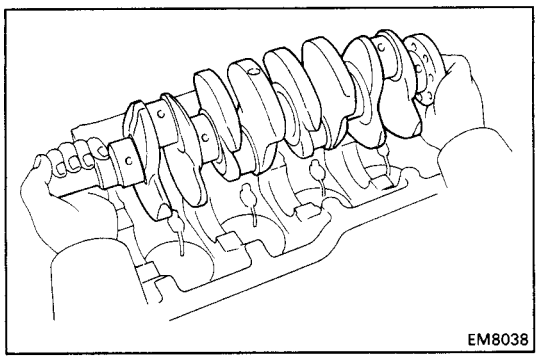

7. REMOVE CRANKSHAFT

(a) Lift out the crankshaft.

(b) Remove the upper bearings and upper thrust washers from the cylinder block.

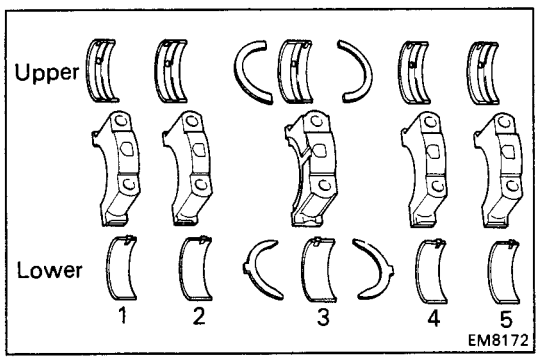

HINT: Arrange the main bearing caps, bearings and thrust washers in correct order.

8. REMOVE OIL NOZZLES (See page LU-26)

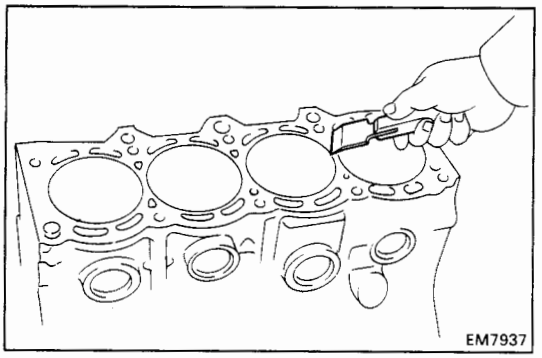

INSPECTION OF CYLINDER BLOCK

1. CLEAN CYLINDER BLOCK

A. Remove gasket material

Using a gasket scraper, remove all the gasket material from the top surface of the cylinder block.

B. Clean cylinder block

Using a soft brush and solvent, thoroughly clean the cylinder block.

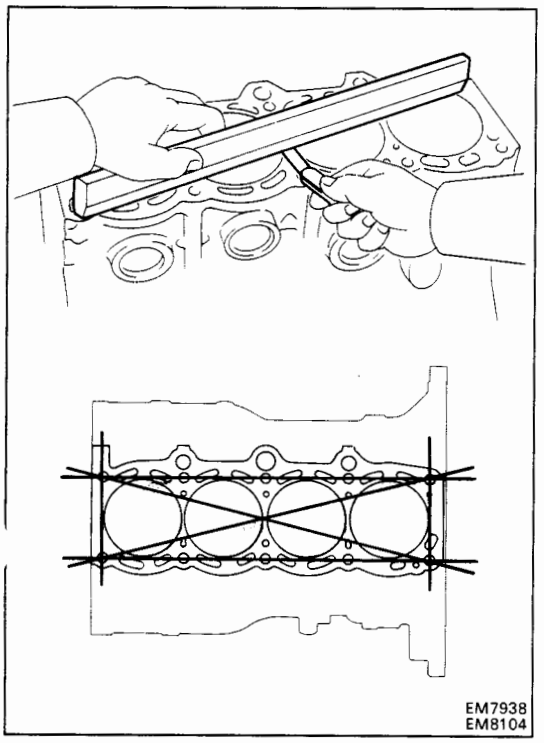

2. INSPECT TOP SURFACE OF CYLINDER BLOCK FOR FLATNESS

Using a precision straight edge and feeler gauge, measure the surfaces contacting the cylinder head gasket for warpage.

Maximum warpage: 0.05 mm (0.0020 in.)

If warpage is greater than maximum, replace the cylinder block.

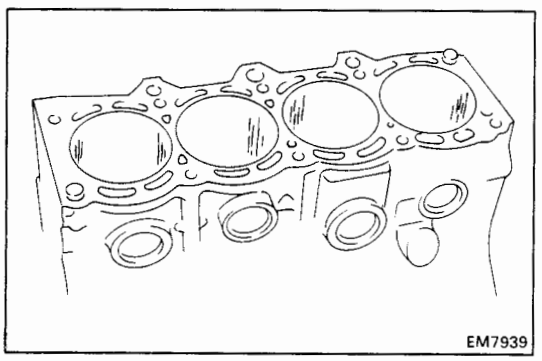

3. INSPECT CYLINDER FOR VERTICAL SCRATCHES

Visually check the cylinder for vertical scratches.

If deep scratches are present, replace the cylinder block.

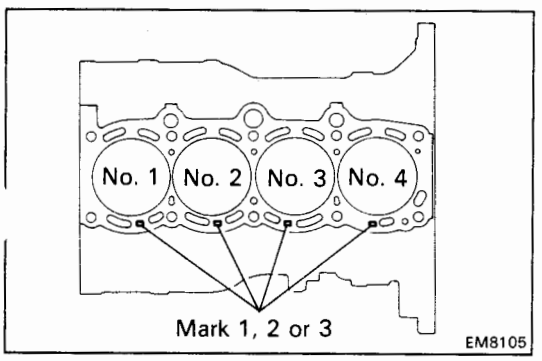

4. INSPECT CYLINDER BORE DIAMETER

HINT: There are three sizes of the standard cylinder bore diameter, marked "1", "2" and "3" accordingly. The mark is stamped on the top of the cylinder block.

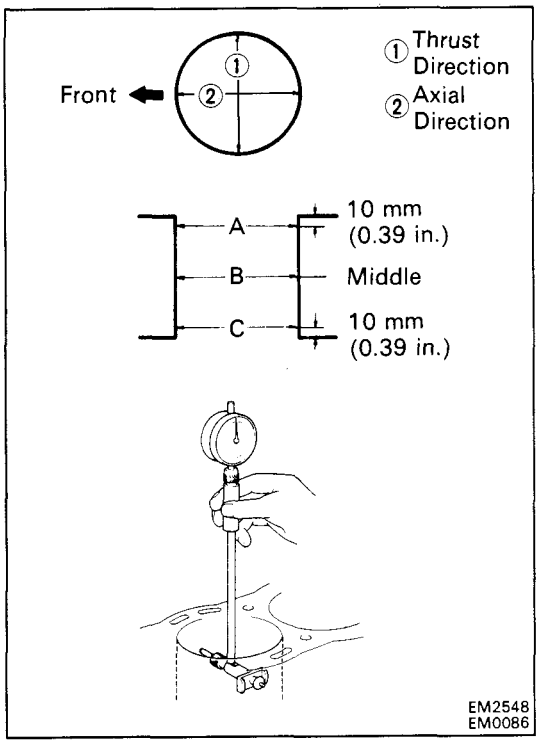

Using a cylinder gauge, measure the cylinder bore diameter at positions A, B and C in the thrust axial directions.

Standard diameter:

Mark "1"	**86.000 – 86.010 mm (3.3858 – 3.3862 in.)**
Mark "2"	**86.010 – 86.020 mm (3.3862 – 3.3866 in.)**
Mark "3"	**86.020 – 86.030 mm (3.3866 – 3.3870 in.)**

Maximum diameter: 86.23 mm (3.3949 in.)

If the diameter is greater than maximum, replace the cylinder block.

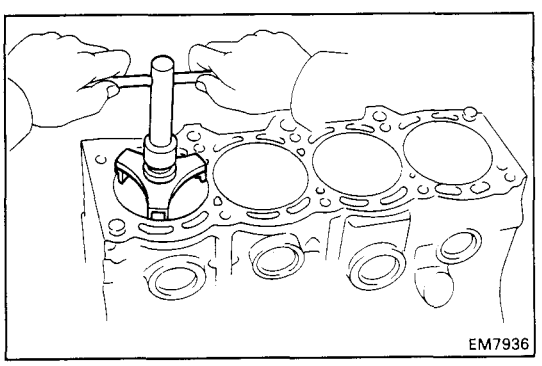

5. REMOVE CYLINDER RIDGE

If the wear is less than 0.2 mm (0.008 in.), using a ridge reamer, grind the top of the cylinder.

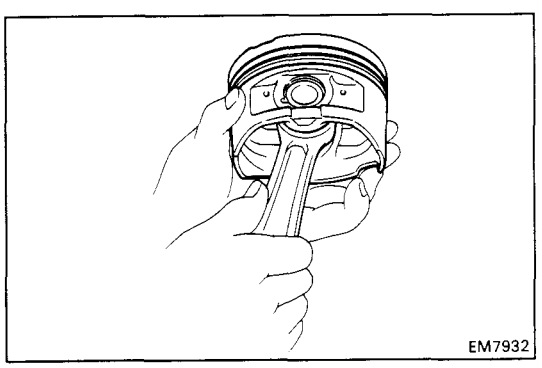

DISASSEMBLY OF PISTON AND CONNECTING ROD ASSEMBLIES

1. CHECK FIT BETWEEN PISTON AND PISTON PIN

Try to move the piston back and forth on the piston pin.

If any movement is felt, replace the piston and pin as a set.

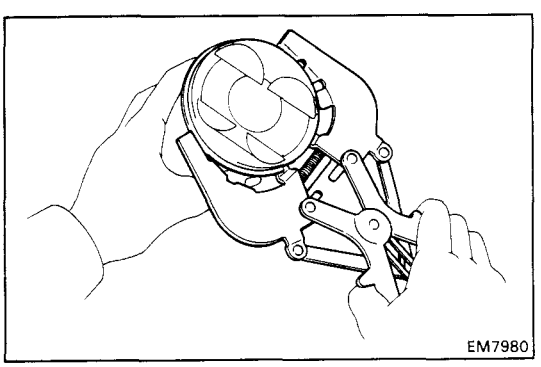

2. REMOVE PISTON RINGS

(a) Using a piston ring expander, remove the two compression rings.

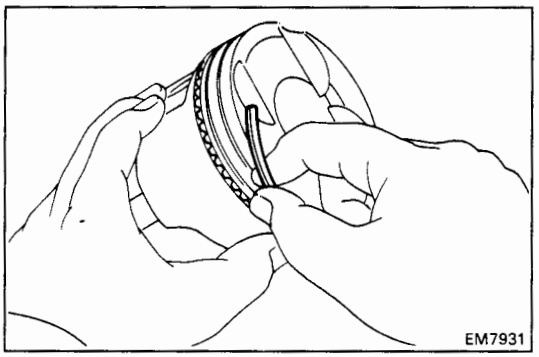

(b) Remove the two side rails and oil ring expander by hand.

HINT: Arrange the rings in correct order only.

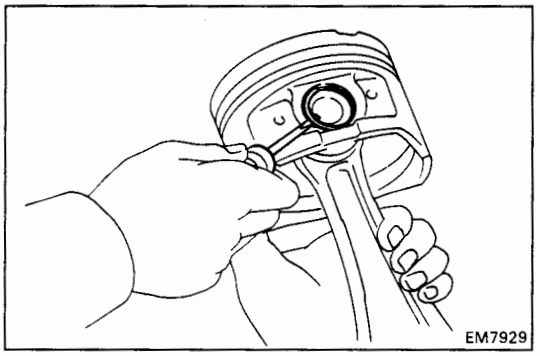

3. DISCONNECT CONNECTING ROD FROM PISTON

(a) Using a small screwdriver, pry out the two snap rings.

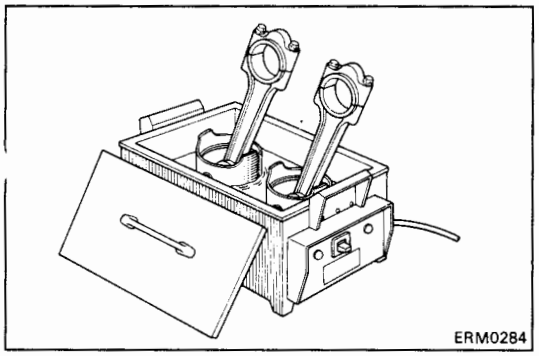

(b) Gradually heat the piston to 80 – 90°C (176 – 194°F).

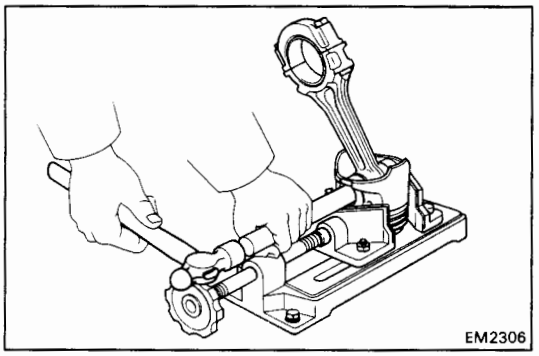

(c) Using plastic-faced hammer and brass bar, lightly tap out the piston pin and remove the connecting rod.

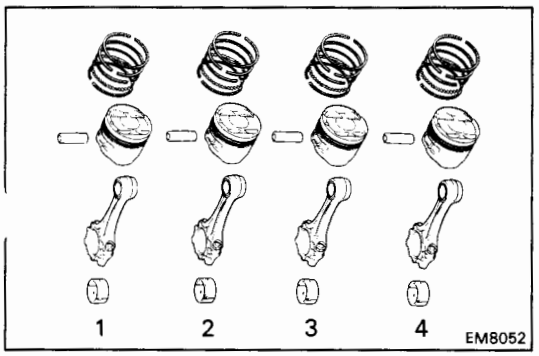

HINT:
- The piston and pin are a matched set.
- Arrange the pistons, pins, rings, connecting rods and bearings in correct order.

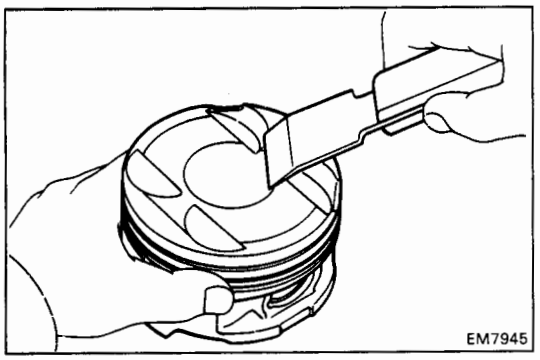

INSPECTION OF PISTON AND CONNECTING ROD ASSEMBLIES

1. CLEAN PISTON

(a) Using a gasket scraper, remove the carbon from the piston top.

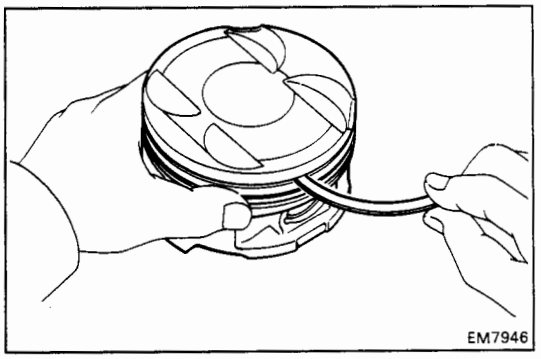

(b) Using a groove cleaner or broken ring, clean the piston ring grooves.

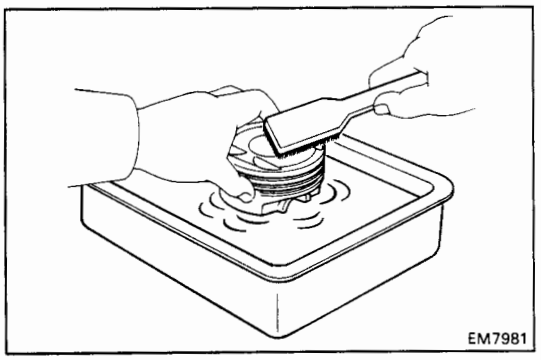

(c) Using solvent and a brush, thoroughly clean the piston.

NOTICE: Do not use a wire brush.

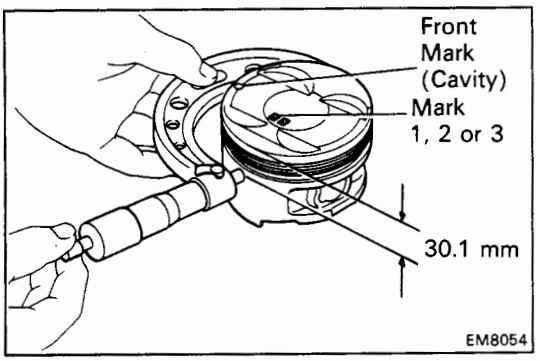

2. INSPECT PISTON

A. Inspect piston oil clearance

HINT: There are three sizes of the standard piston diameter, marked "1", "2" and "3" accordingly. The mark is stamped on the piston top.

(a) Using a micrometer, measure the piston diameter at right angles to the piston pin center line, 30.1 mm (1.185 in.) from the piston head.

Piston diameter:

Mark "1"	**85.920 – 85.930 mm (3.3827 – 3.3831 in.)**
Mark "2"	**85.930 – 85.940 mm (3.3831 – 3.3835 in.)**
Mark "3"	**85.940 – 85.950 mm (3.3835 – 3.3839 in.)**

(b) Measure the cylinder bore diameter in the thrust directions. (See step 4 on page EM-152)

(c) Subtract the piston diameter measurement from the cylinder bore diameter measurement.

Standard oil clearance: 0.070 – 0.090 mm (0.0028 – 0.0035 in.)

Maximum oil clearance: 0.110 mm (0.0043 in.)

If the oil clearance is greater than maximum, replace all the four pistons. If necessary, replace the cylinder block.

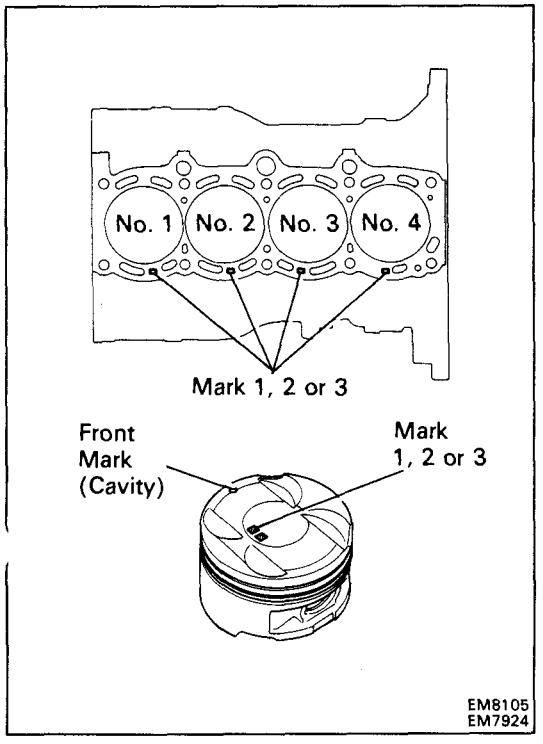

HINT (Use new cylinder block): Use a piston with the same number mark as the cylinder bore diameter marked on the cylinder block.

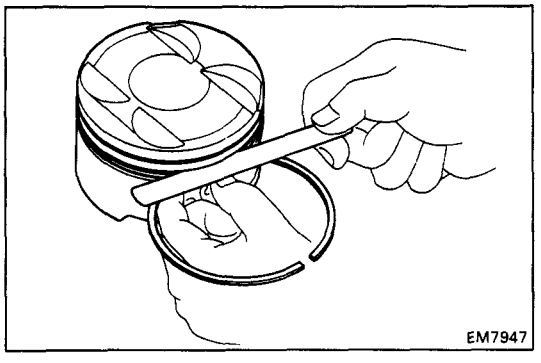

B. Inspect piston ring groove clearance

Using a feeler gauge, measure the clearance between new piston ring and the wall of the piston ring groove.

Ring groove clearance:

No.1 0.040 – 0.080 mm (0.0016 – 0.0031 in.)

No.2 0.030 – 0.070 mm (0.0012 – 0.0028 in.)

If the clearance is greater than maximum, replace the piston.

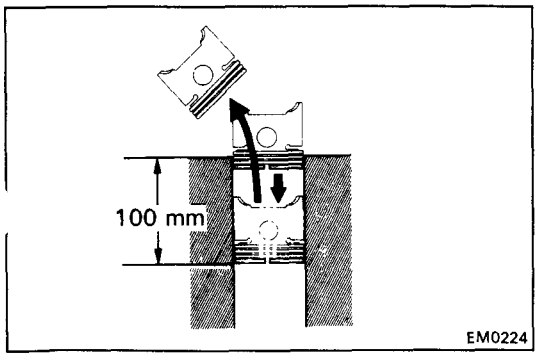

C. Inspect piston ring end gap

(a) Insert the piston ring into the cylinder bore.

(b) Using a piston, push the piston ring a little beyond the bottom of the ring travel, 115 mm (4.53 in.) from the top of the cylinder block.

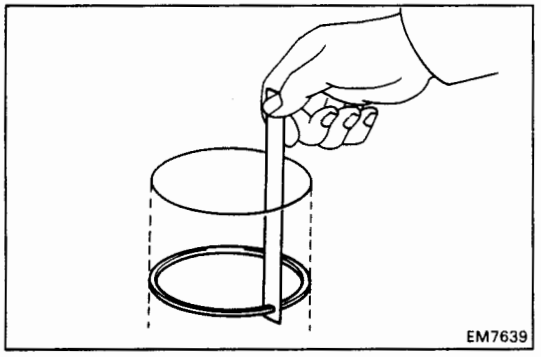

(c) Using a feeler gauge, measure the end gap.

Standard end gap:

No.1	**0.330 – 0.550 mm (0.0130 – 0.0217 in.)**
No.2	**0.450 – 0.670 mm (0.0177 – 0.0264 in.)**
Oil (Side rail)	**0.200 – 0.600 mm (0.0079 – 0.0236 in.)**

Maximum end gap:

No.1	**0.85 mm (0.0335 in.)**
No.2	**0.97 mm (0.0382 in.)**
Oil (Side rail)	**0.90 mm (0.0354 in.)**

If the end gap is greater than maximum, replace the piston ring. If the end gap is greater than maximum, even with a new piston ring, replace the cylinder block.

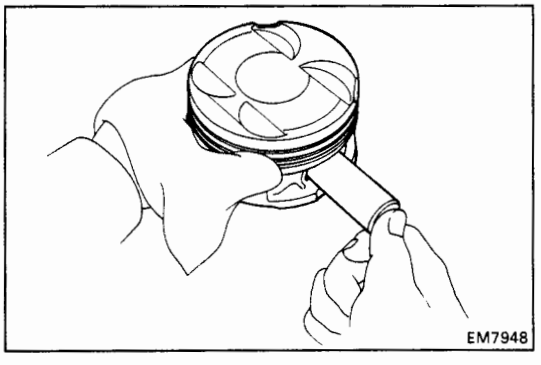

D. Inspect piston pin fit

At 60°C (140°F), you should be able to push the piston pin into the piston pin hole with your thumb.

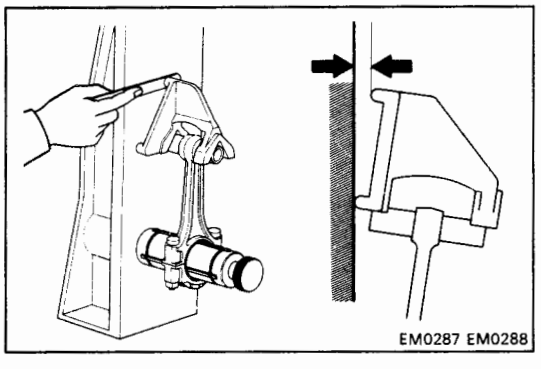

3. INSPECT CONNECTING ROD

A. Inspect connecting rod alignment

Using rod aligner and feeler gauge, check the connecting rod alignment.

- Check for bending.

Maximum bending:

0.05 mm (0.0020 in.) per 100 mm (3.94 in.)

If bend is greater than maximum, replace the connecting rod assembly.

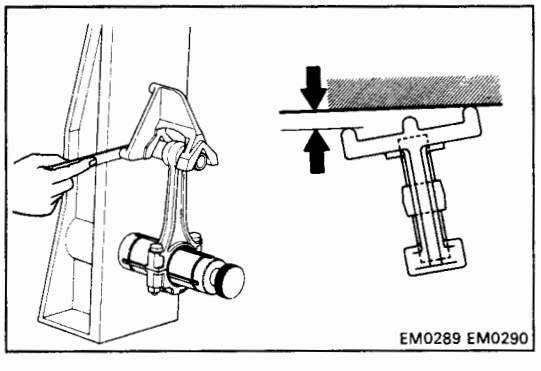

- Check for twist.

Maximum twist:

0.15 mm (0.0059 in.) per 100 mm (3.94 in.)

If twist is greater than maximum, replace the connecting rod assembly.

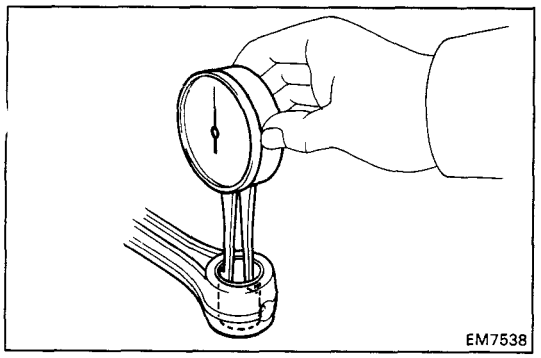

B. Inspect piston pin oil clearance

(a) Using a caliper gauge, measure the inside diameter of the connecting rod bushing.

Bushing inside diameter: 22.005 – 22.017 mm (0.8663 – 0.8668 in.)

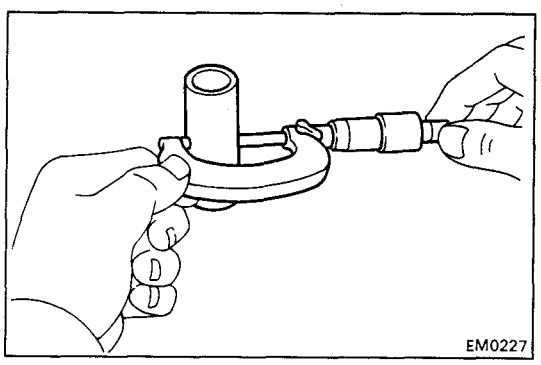

(b) Using a micrometer, measure the piston pin diameter.

Piston pin diameter: 21.997 – 22.009 mm (0.8660 – 0.8665 in.)

(c) Subtract the piston pin diameter measurement from the bushing inside diameter measurement.

Standard oil clearance: 0.005 – 0.011 mm (0.0002 – 0.0004 in.)

Maximum oil clearance: 0.05 mm (0.0020 in.)

If the oil clearance is greater than maximum, replace the bushing. If necessary, replace the piston and piston pin as a set.

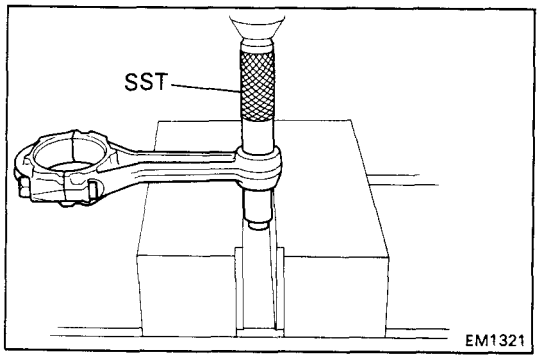

C. If necessary, replace connecting rod bushing

(a) Using SST and a press, press out the bushing.

SST 09222-30010

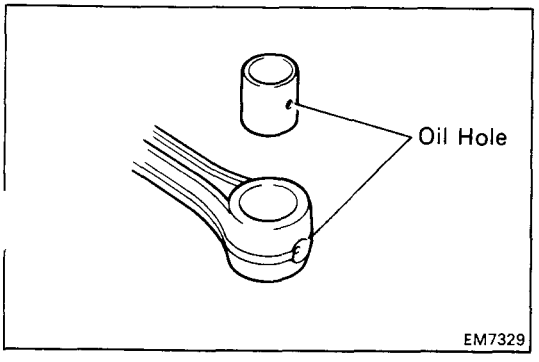

(b) Align the oil holes of a new bushing and the connecting rod.

(c) Using SST and a press, press in the bushing.

SST 09222-30010

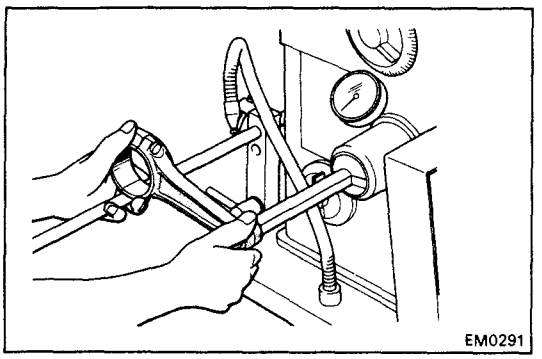

(d) Using a pin hole grinder, hone the bushing to obtain the standard specified clearance (see step B above) between the bushing and piston pin.

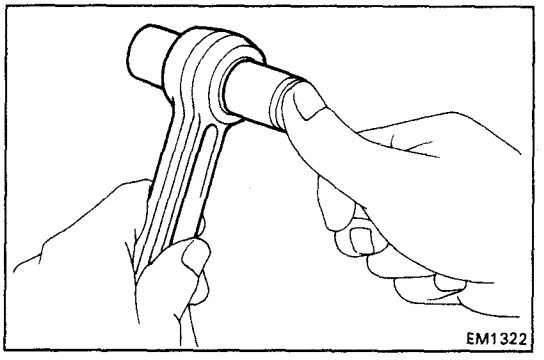

(e) Check the piston pin fit at normal room temperature.

Coat the piston pin with engine oil, and push it into the connecting rod with your thumb.

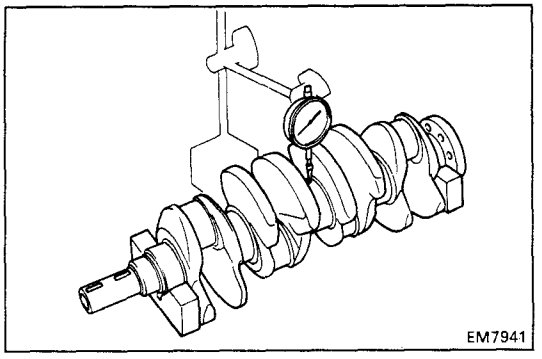

INSPECTION AND REPAIR OF CRANKSHAFT

1. INSPECT CRANKSHAFT FOR RUNOUT

(a) Place the crankshaft on V-blocks.

(b) Using a dial indicator, measure the circle runout at the center journal.

Maximum circle runout: 0.06 mm (0.0024 in.)

If the circle runout is greater than maximum, replace the crankshaft.

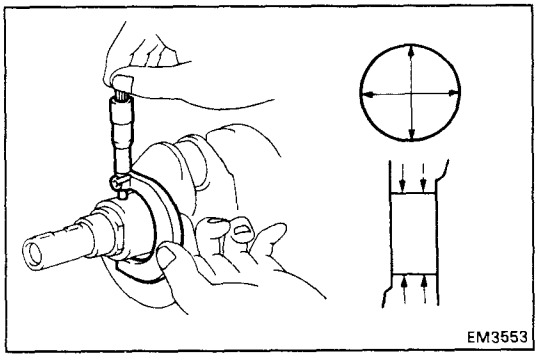

2. INSPECT MAIN JOURNALS AND CRANK PINS

(a) Using a micrometer, measure the diameter of each main journal and crank pin.

Main journal diameter:

STD size	**54.988 – 55.003 mm (2.1653 – 2.1655 in.)**
U/S 0.25	**54.745 – 54.755 mm (2.1553 – 2.1557 in.)**

Crank pin diameter:

STD size	**47.985 – 48.000 mm (1.8892 – 1.8898 in.)**
U/S 0.25	**47.745 – 47.755 mm (1.8797 – 1.8801 in.)**

If the diameter is not as specified, check the oil clearance (See pages EM-145 to 149). If necessary, grind or replace the crankshaft.

(b) Check each main journal and crank pin for taper and out-of-round as shown.

Maximum taper and out-of-round: 0.02 mm (0.0008 in.)

If the taper and out-of-round is greater than maximum, replace the crankshaft.

3. IF NECESSARY, GRIND AND HONE MAIN JOURNALS AND/OR CRANK PINS

Grind and hone the main journals and/or crank pins to the finished undersized diameter (See procedure step 2).

Install new main journal and/or crank pin undersized bearings.

REPLACEMENT OF CRANKSHAFT OIL SEALS

HINT: There are two methods (A and B) to replace the oil seal which are as follows:

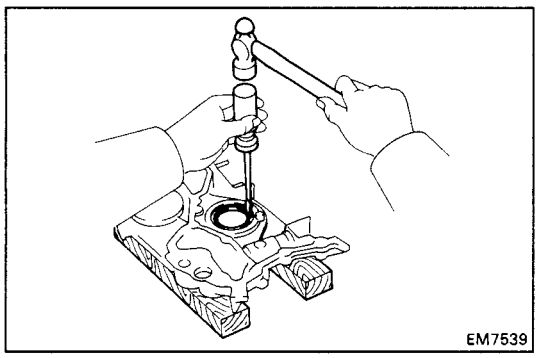

1. REPLACE CRANKSHAFT FRONT OIL SEAL

A. If oil pump is removed from cylinder block:

(a) Using a screwdriver and hammer, tap out the oil seal.

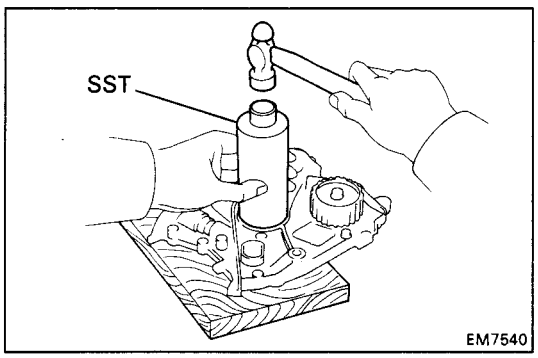

(b) Using SST and a hammer, tap in a new oil seal until its surface is flush with the oil pump case edge.

SST 09226-10010

(c) Apply MP grease to the oil seal lip.

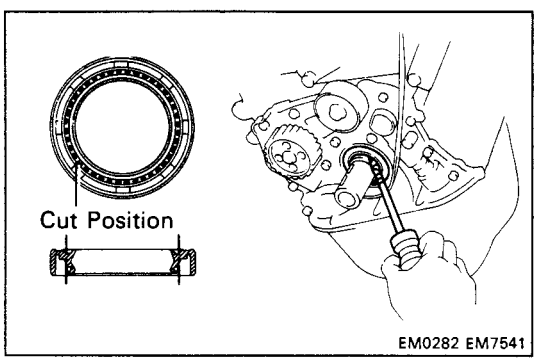

B. If oil pump is installed to the cylinder block:

(a) Using a knife, cut off the oil seal lip.

(b) Using a screwdriver, pry out the oil seal.

NOTICE: Be careful not to damage the crankshaft. Tape the screwdriver tip.

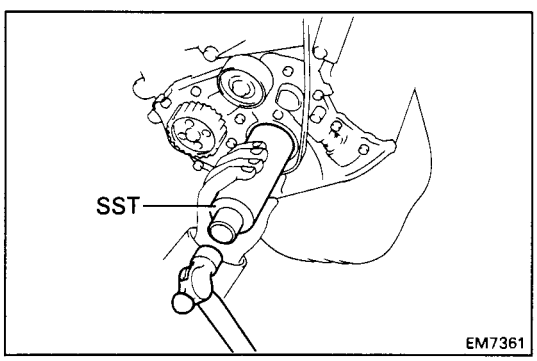

(c) Apply MP grease to a new oil seal lip.

(d) Using SST and a hammer, tap in the oil seal until its surface is flush with the oil pump case edge.

SST 09226-10010

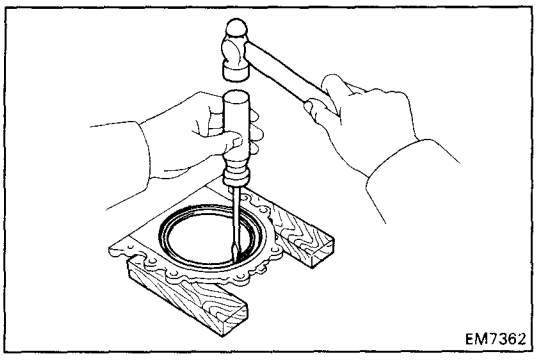

2. REPLACE CRANKSHAFT REAR OIL SEAL

A. If rear oil seal retainer is removed from cylinder block:

(a) Using screwdriver and hammer, tap out the oil seal.

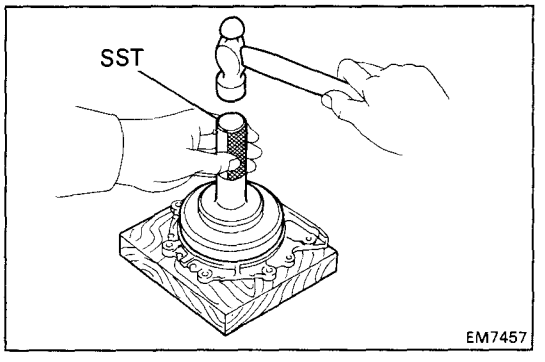

(b) Using SST and a hammer, tap in a new oil seal until its surface is flush with the rear oil seal edge.

SST 09223-63010

(c) Apply MP grease to the oil seal lip.

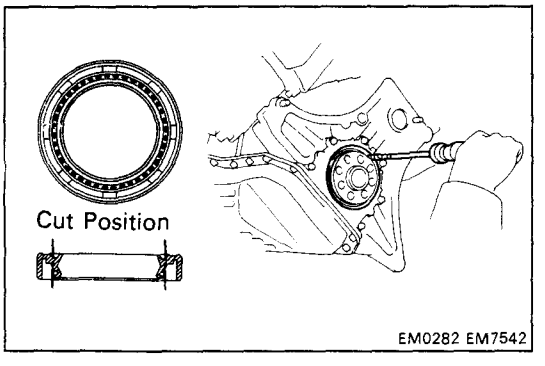

B. If rear oil seal retainer is installed to cylinder block:

(a) Using a knife, cut off the oil seal lip.

(b) Using a screwdriver, pry out the oil seal.

NOTICE: Be careful not to damage the crankshaft. Tape the screwdriver tip.

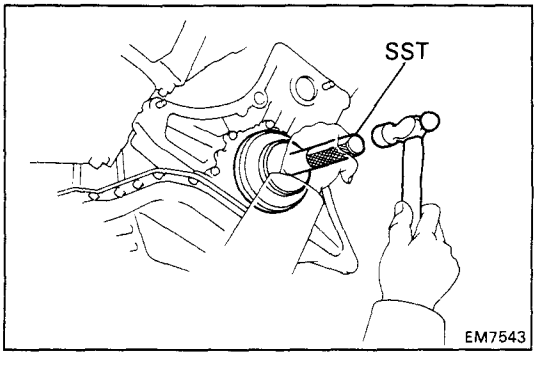

(c) Apply MP grease to a new oil seal lip.

(d) Using SST and a hammer, tap in the oil seal until its surface is flush with the rear oil seal retainer edge.

SST 09223-63010

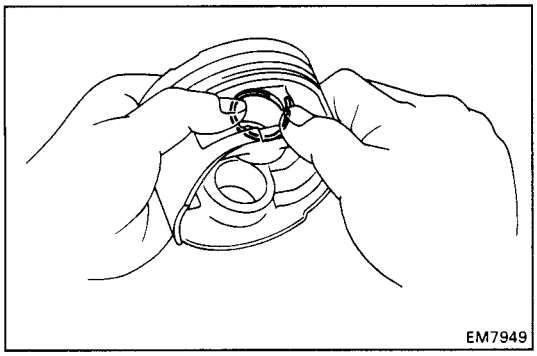

ASSEMBLY OF PISTON AND CONNECTING ROD ASSEMBLIES

1. ASSEMBLE PISTON AND CONNECTING ROD

(a) Install a new snap ring on one side of the piston pin hole.

HINT: Be sure the end gap of the snap ring is not aligned with the pin hole cutout portion of the piston.

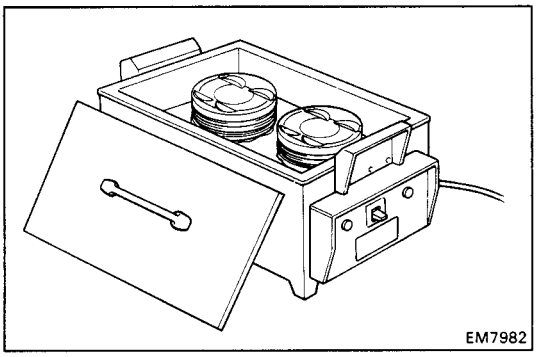

(b) Gradually heat the piston to 80 – 90°C (176 – 194°F).

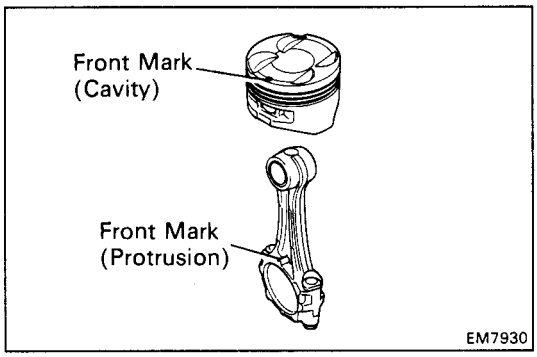

(c) Coat the piston pin with engine oil.

(d) Align the front marks of the piston and connecting rod, and push in the piston pin with your thumb.

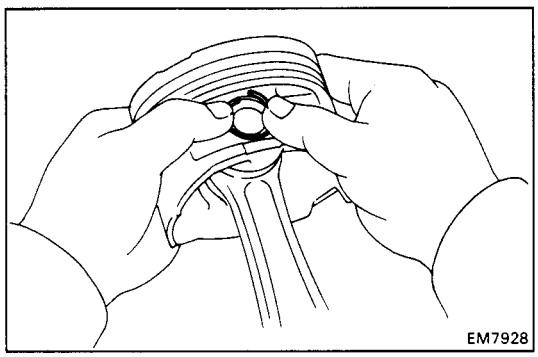

(e) Install a new snap ring on the other side of the piston pin hole.

HINT: Be sure the end gap of the snap ring is not aligned with the pin hole cutout portion of the piston.

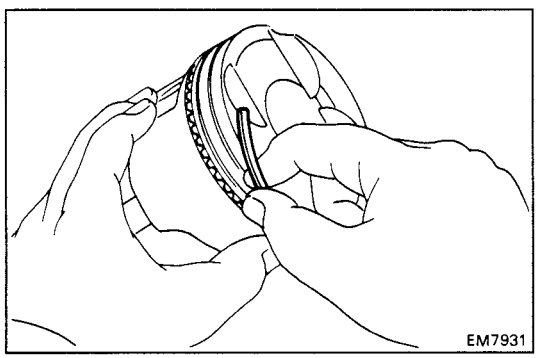

2. INSTALL PISTON RINGS

(a) Install the oil ring expander and two side rails by hand.

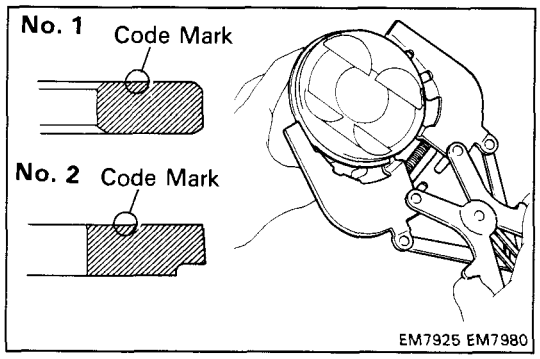

(b) Using a piston ring expander, install the two compression rings with the code mark facing upward.

Code mark: R

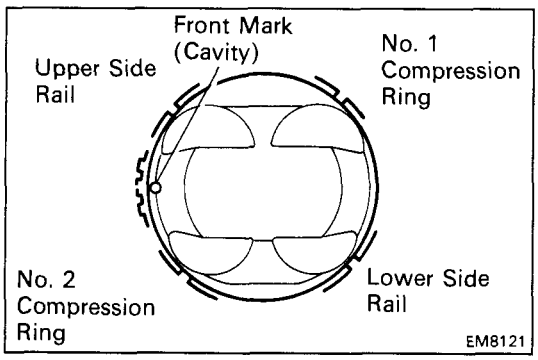

(c) Position the piston rings so that the ring ends are as shown.

NOTICE: Do not align the ring ends.

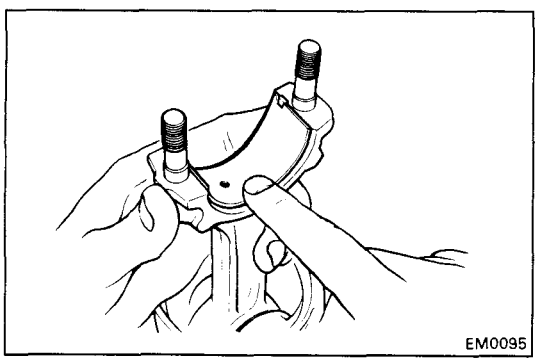

3. INSTALL BEARINGS

(a) Align the bearing claw with the groove of the connecting rod or connecting cap.

(b) Install the bearings in the connecting rod and connecting rod cap.

ASSEMBLY OF CYLINDER BLOCK

(See page EM-133)

HINT:
- Thoroughly clean all parts to be assembled.
- Before installing the parts, apply new engine oil to all sliding and rotating surfaces.
- Replace all gaskets, O-rings and oil seals with new parts.

1. INSTALL OIL NOZZLES (See page LU-14)

2. INSTALL MAIN BEARINGS

HINT:
- Main bearings come in widths of 19.2 mm (0.756 in.) and 23.0 mm (0.906 in.). Install the 23.0 mm (0.906 in.) bearings in the No.3 cylinder block journal position with the main bearing cap. Install the 19.2 mm (0.756 in.) bearings in the other positions.
- Upper bearings have an oil groove and oil holes; lower bearings do not.

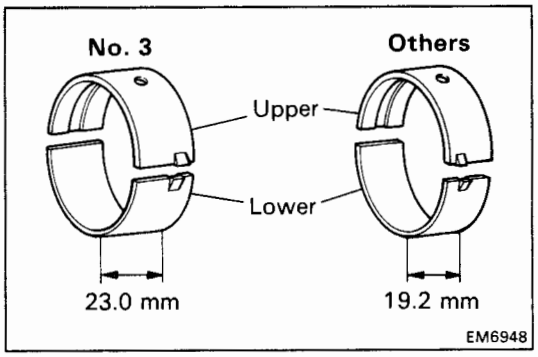

(a) Align the bearing claw with the claw groove of the cylinder block, and push in the five upper bearings.

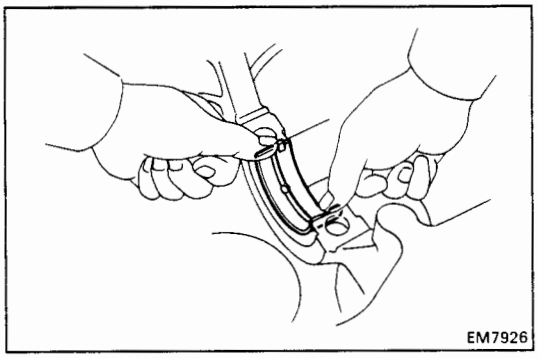

(b) Align the bearing claw with the claw groove of the main bearing cap, and push in the five lower bearings.

HINT: A number is marked on each main bearing cap to indicate the installation position.

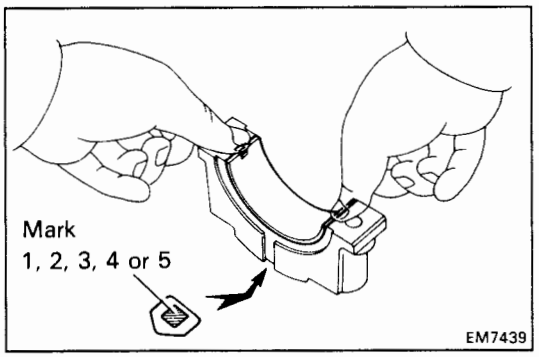

3. INSTALL UPPER THRUST WASHERS

Install the two thrust washers under the No.3 journal position of the cylinder block with the oil grooves facing outward.

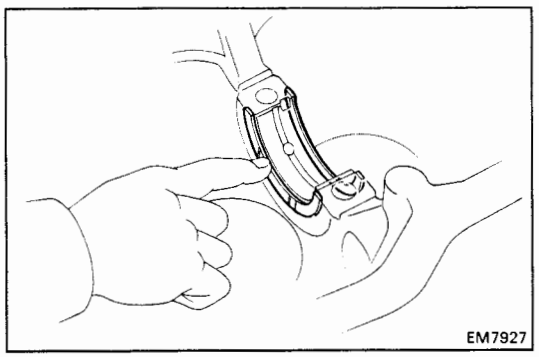

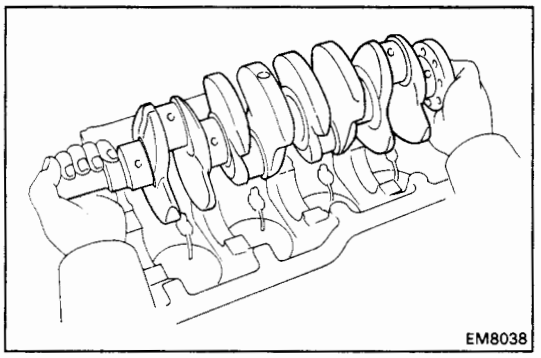

4. PLACE CRANKSHAFT ON CYLINDER BLOCK

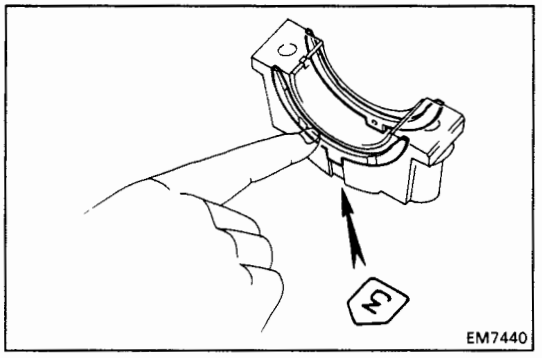

5. INSTALL MAIN BEARING CAPS AND LOWER THRUST WASHERS

(a) Install the two thrust washers on the No.3 bearing cap with the grooves facing outward.

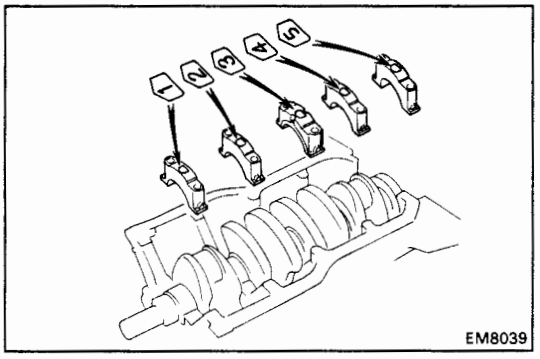

(b) Install the five main bearing caps in their proper locations.

HINT: Each bearing cap has a number and front mark.

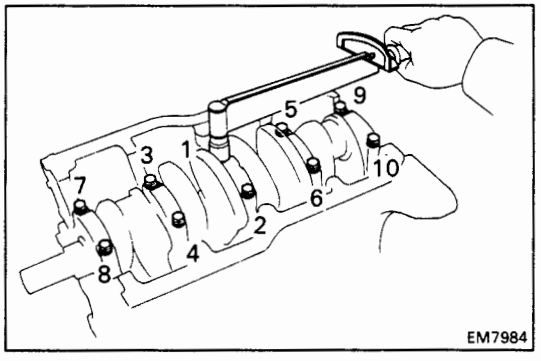

(c) Apply a light coat of engine oil on the threads and under the heads of the main bearing caps.

(d) Install and uniformly tighten the ten bolts of the main bearing caps in several passes in the sequence shown.

Torque: 600 kg-cm (43 ft-lb, 59 N·m)

(e) Check that the crankshaft turns smoothly.

(f) Check the crankshaft thrust clearance.
(See step 5 on page EM-147)

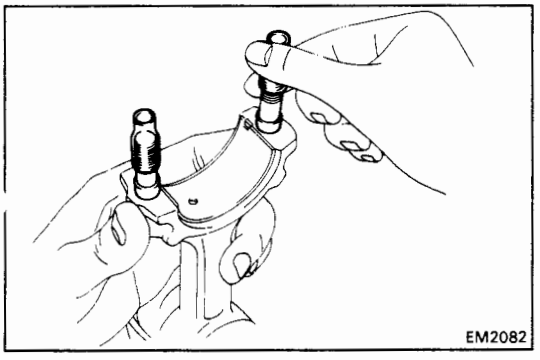

6. INSTALL PISTON AND CONNECTING ROD ASSEMBLIES

(a) Cover the connecting rod bolts with a short piece of hose to protect the crankshaft from damage.

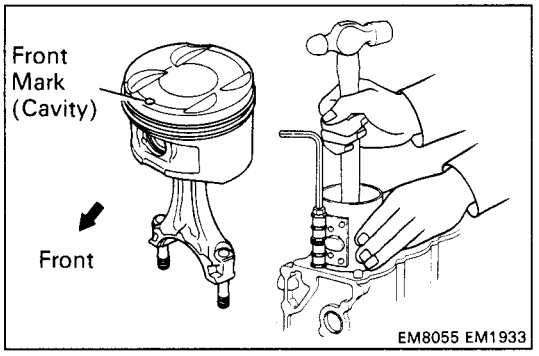

(b) Using a piston ring compressor, push the correctly numbered piston and connecting rod assemblies into each cylinder with the front mark of the piston facing forward.

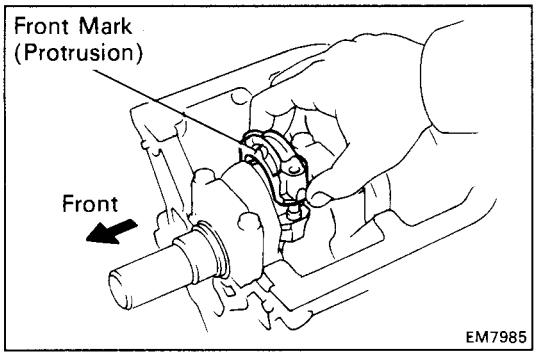

7. INSTALL CONNECTING ROD CAPS

(a) Match the numbered connecting rod cap with the connecting rod.

(b) Install the connecting rod cap with the front mark facing forward.

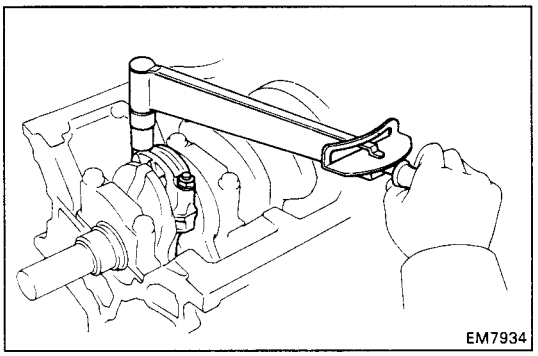

(c) Apply a light coat of engine oil on the threads and under the cap nuts.

(d) Using SST, install and alternately tighten the cap nuts in several passes.

Torque: 680 kg-cm (49 ft-lb, 67 N·m)

(e) Check that the crankshaft turns smoothly.

(f) Check the connecting rod thrust clearance. (See step 2 on page EM-145)

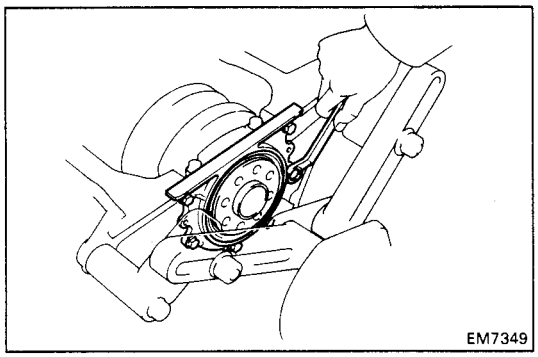

8. INSTALL REAR OIL SEAL RETAINER

Install a new gasket and the retainer with the six bolts.

Torque: 95 kg-cm (82 in.-lb, 9.3 N·m)

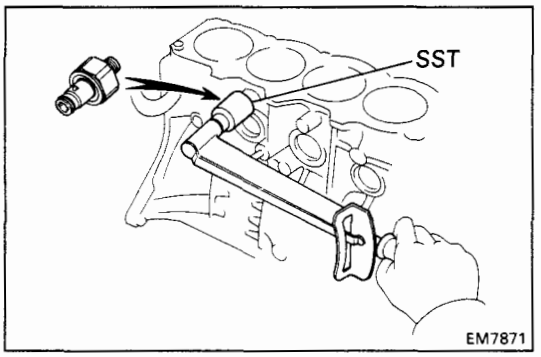

POST ASSEMBLY

1. **INSTALL KNOCK SENSOR**
   Using SST, install the knock sensor.
   SST 09816-30010
   Torque: 450 kg-cm (33 ft-lb, 44 N·m)

2. **INSTALL OIL COOLER (See pages LU-21 and 22)**

3. **INSTALL OIL FILTER (See page LU-7)**

4. **INSTALL OIL PUMP AND OIL PAN (See pages LU-15 and 16)**

5. **INSTALL WATER PUMP (See pages CO-12 and 13)**

6. **INSTALL CYLINDER HEAD (See pages EM-86 to 95)**

7. **INSTALL TURBOCHARGER (See pages TC-16 to 19)**

8. **INSTALL PULLEYS AND TIMING BELT (See pages EM-35 to 41)**

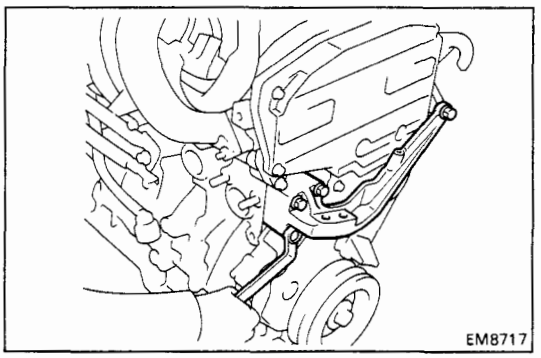

9. **INSTALL RH ENGINE MOUNTING BRACKET**
   Install the mounting bracket with the four bolts.
   Torque: 620 kg-cm (45 ft-lb, 61 N·m)

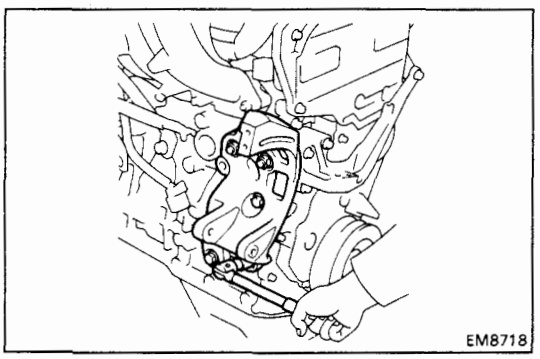

10. **INSTALL ALTERNATOR BRACKET**
    Install the alternator bracket with the three bolts and two nuts.
    Torque: 440 kg-cm (32 ft-lb, 43 N·m)

11. **INSTALL ALTERNATOR (See page CH-17)**

12. **REMOVE ENGINE STAND**

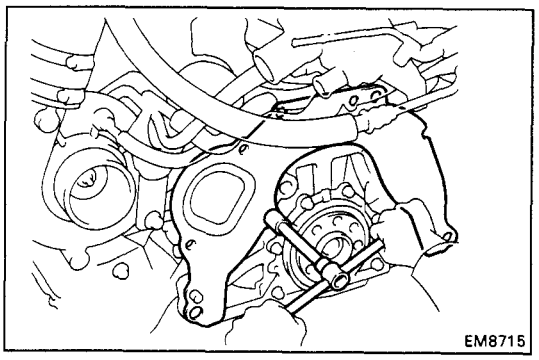

13. INSTALL REAR END PLATE

Torque: 95 kg-cm (82 ft-lb, 9.3 N·m)

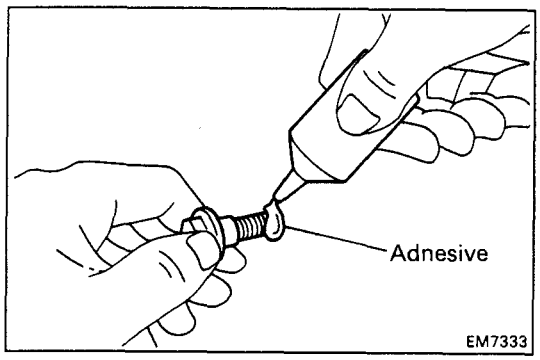

14. INSTALL FLYWHEEL

(a) Apply adhesive to two or three threads of the mount bolt end.

Adhesive: Part No. 08833-00070, THREE BOND 1324 or equivalent

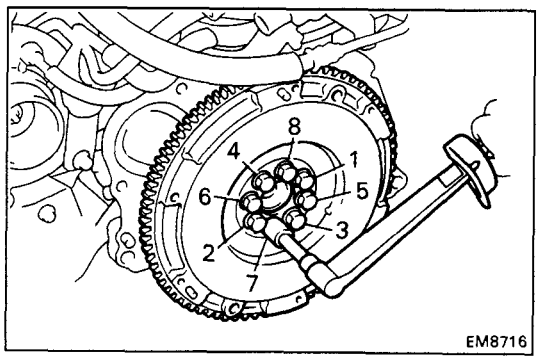

(b) Install the flywheel on the crankshaft.

(c) Install and uniformly tighten the mount bolts in several passes in the sequence shown.

Torque: 1,100 kg-cm (80 ft-lb, 108 N·m)

15. INSTALL CLUTCH DISC AND COVER

INSTALLATION OF ENGINE

1. **ASSEMBLE ENGINE AND TRANSAXLE (See pages MT-5 and 6)**

2. **INSTALL STARTER (See page ST-17)**

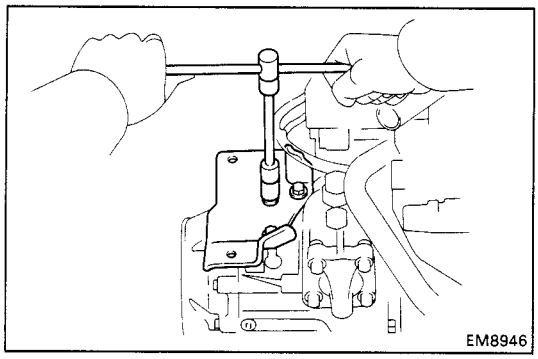

3. **INSTALL LH ENGINE MOUNTING BRACKET**

   Install the LH mounting bracket to the transaxle case with the three bolts.

   Torque: 530 kg-cm (38 ft-lb, 52 N·m)

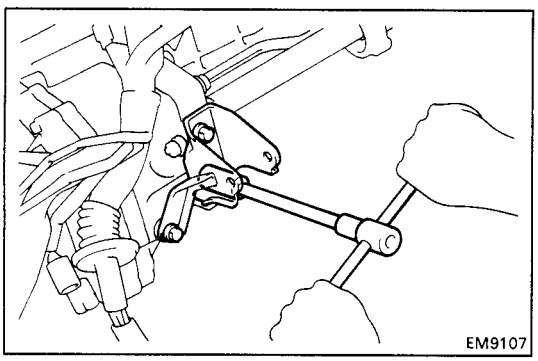

4. **INSTALL REAR ENGINE MOUNTING BRACKET**

   Install the mounting bracket with the six bolts.

   Torque:

14 mm head bolt	**530 kg-cm (38 ft-lb, 52 N·m)**
17 mm head bolt	**790 kg-cm (57 ft-lb, 77 N·m)**

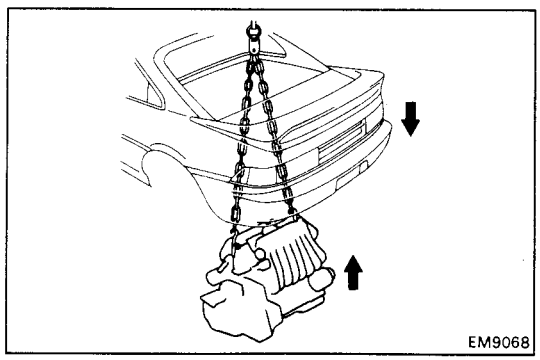

5. **INSTALL ENGINE AND TRANSAXLE ASSEMBLY IN VEHICLE**

   (a) Attach the engine chain hoist to the engine hangers.

   (b) Slowly lower the vehicle, and raise the engine.

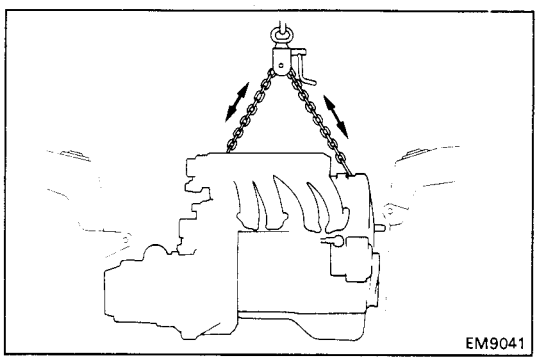

   (c) Keep the engine level, and align RH and LH mountings with the body mountings.

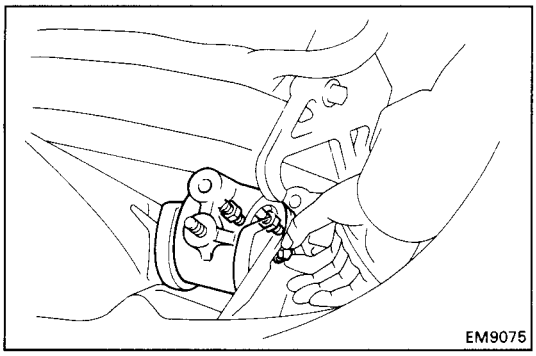

(d) Attach the RH mounting insulator to the body, and temporarily install the through bolt.

(e) Attach the RH mounting insulator to the mounting bracket, and temporarily install the two nuts.

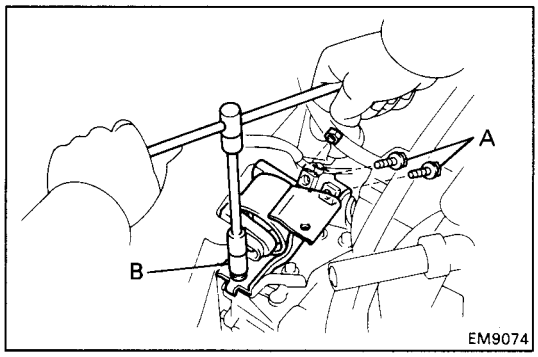

(f) Attach the LH mounting insulator to the body, and temporarily install the through bolt.

(g) Attach the LH mounting insulator to the mounting bracket, and install the three bolts.

Torque:
A 650 kg-cm (47 ft-lb, 63 N·m)
B 740 kg-cm (54 ft-lb, 73 N·m)

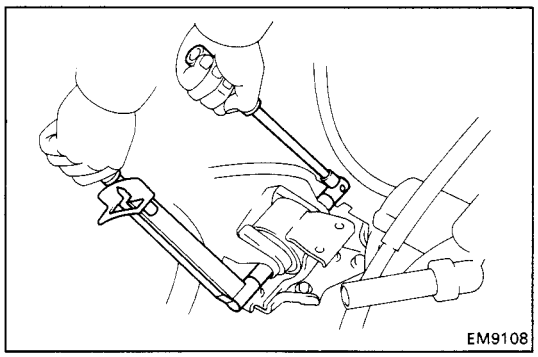

(h) Tighten the through bolt holding the LH mounting insulator to the body.

Torque: 800 kg-cm (58 ft-lb, 78 N·m)

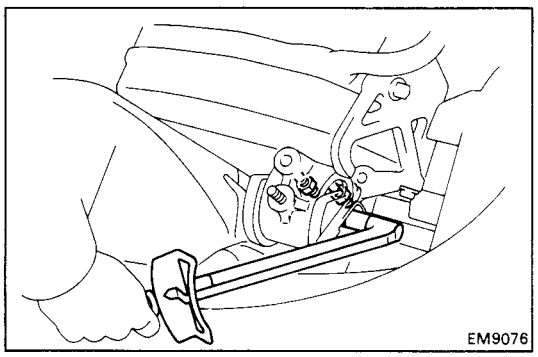

(i) Tighten the two nuts holding the RH mounting insulator to the mounting bracket.

Torque: 530 kg-cm (38 ft-lb, 52 N·m)

(j) Tighten the through bolt holding the RH mounting insulator to the body.

Torque: 800 kg-cm (58 ft-lb, 78 N·m)

(k) Remove the engine chain hoist from the engine.

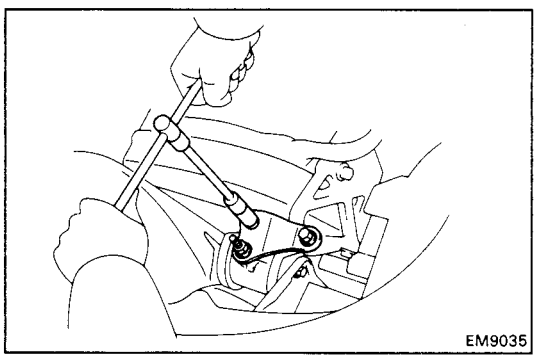

6. INSTALL RH ENGINE MOUNTING STAY

Install the mounting stay with the two bolts and nut.

Torque: 740 kg-cm (54 ft-lb, 73 N·m)

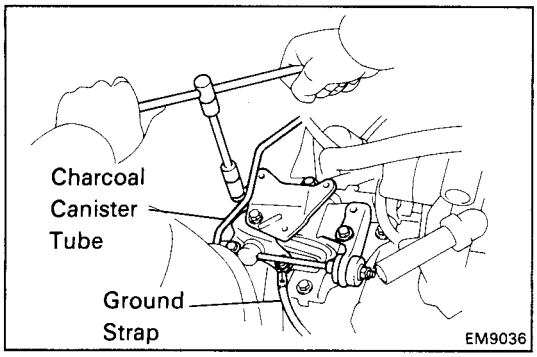

7. INSTALL LATERAL CONTROL ROD AND AIR CLEANER CASE BRACKET

Install the control rod, case bracket and charcoal canister tube with the five bolts, and connect the ground strap (from transaxle). Do not the tighten the bolt (A).

Torque: 360 kg-cm (26 ft-lb, 35 N·m)

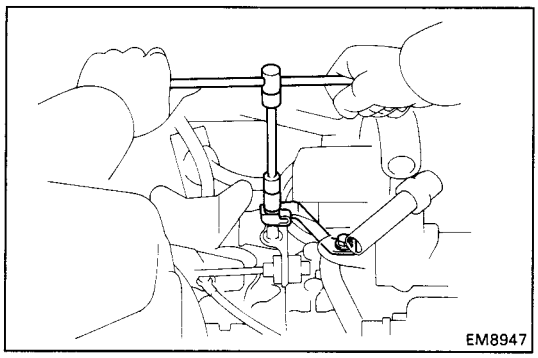

8. INSTALL LH ENGINE MOUNTING STAY

(a) Install the mounting stay and speedometer cable clamp with the two bolts.

Torque:
Transaxle side 250 kg-cm (18 ft-lb, 25 N·m)
Mounting insulator side
740 kg-cm (54 ft-lb, 73 N·m)

(b) Tighten the bolt (A) of step 6.

Torque: 380 kg-cm (27 ft-lb, 37 N·m)

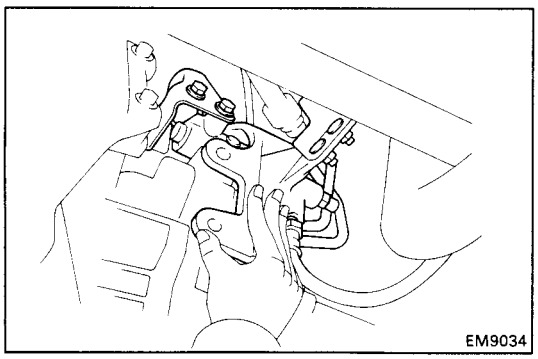

9. INSTALL CLUTCH RELEASE CYLINDER AND FRONT ENGINE MOUNTING BRACKET

(a) Place the release cylinder on the transaxle.

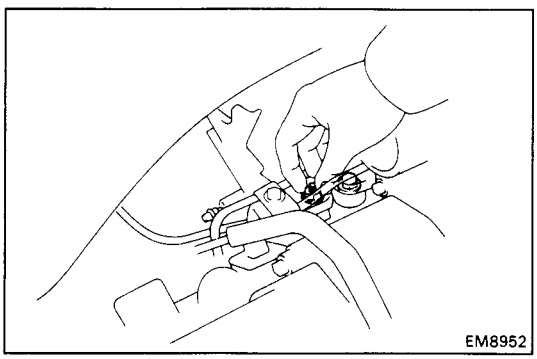

(b) Temporarily install the bolt and nut holding the release cylinder to the transaxle.

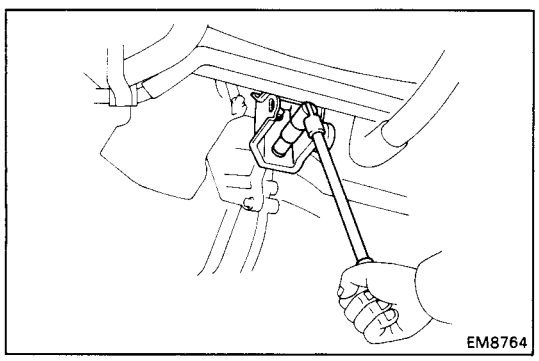

(c) Install the mounting bracket with the two bolts.

Torque: 790 kg-cm (57 ft-lb, 77 N·m)

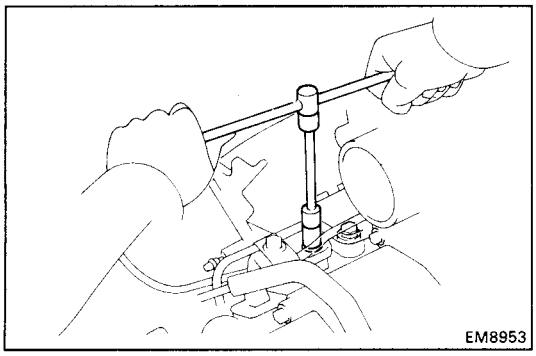

(d) Tighten the bolt and nut holding the clutch release cylinder to the tranaxle.

Torque: 120 kg-cm (9 ft-lb, 12 N·m)

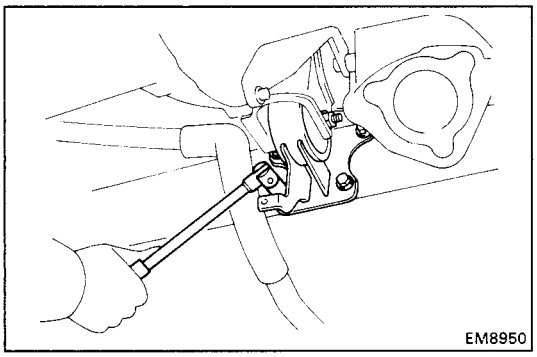

10. INSTALL FRONT ENGINE MOUNTING INSULATOR

(a) Install the mounting insulator to the body with the four bolts.

Torque: 740 kg-cm (54 ft-lb, 73 N·m)

(b) Temporarily install the through bolt and nut holding the mounting insulator to the mpunting bracket.

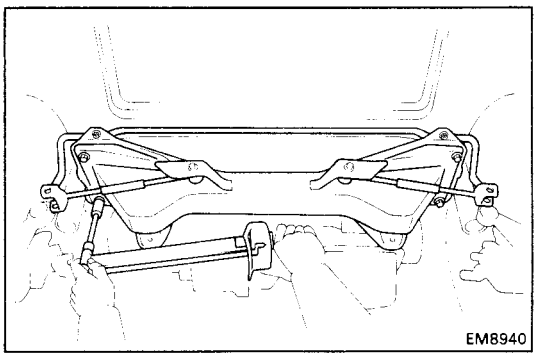

11. INSTALL REAR SUSPENSION LOWER CROSSMEMBER

(a) Install the lower crossmember with the four bolts.

Torque: 1,150 kg-cm (83 ft-lb, 113 N·m)

(b) Install the drive shafts. (See pages SA-66 to 68)

(c) Install the lower suspension arm. (See page SA-77)

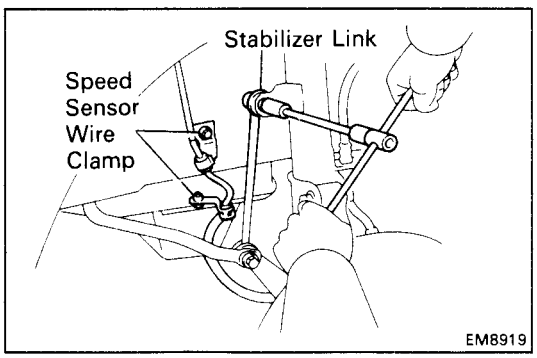

(d) Install the stabilizer link to the shock absorber with the nut. Connect the two stabilizer links

Torque: 500 kg-cm (36 ft-lb, 49 N·m)

(e) Install the wire clamp of the speed sensor with the bolt. Install the two wire clamp.

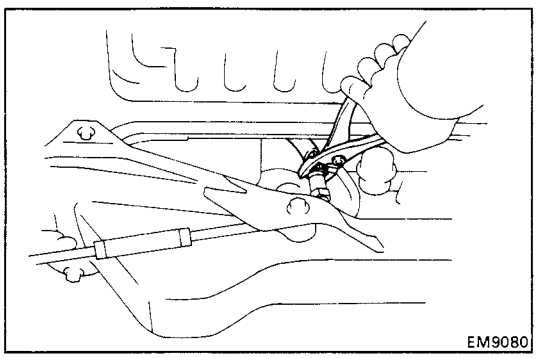

12. CONNECT SPEEDOMETER CABLE

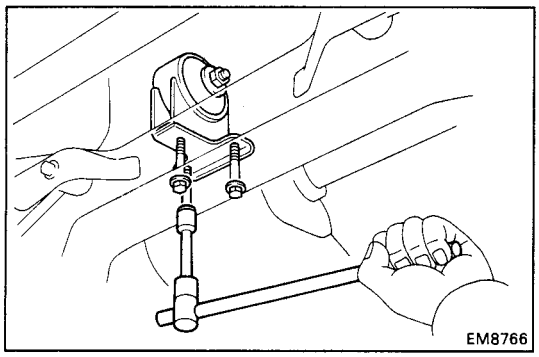

13. INSTALL REAR ENGINE MOUNTING INSULATOR

(a) Temporarily install the mounting bracket to the body with the three bolts.

(b) Temporarily install the through bolt holding the mounting insulator to the mounting bracket.

(c) Install the mounting bracket to the body with the three bolts.

Torque: 650 kg-cm (47 ft-lb, 64 N·m)

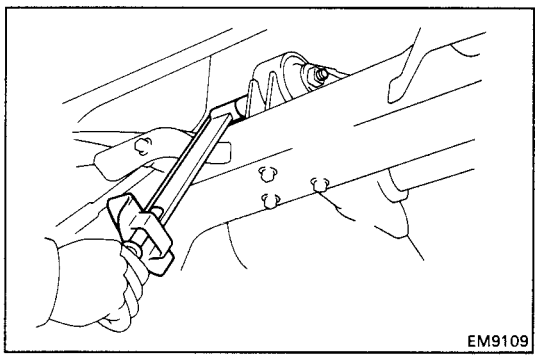

(d) Tighten the through bolt holding the mounting insulator to the mounting bracket.

Torque: 800 kg-cm (58 ft-lb, 79 N·m)

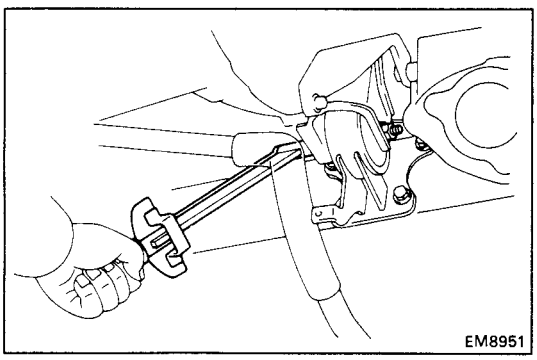

14. TIGHTEN FRONT ENGINE MOUNTING THROUGH BOLT

Torque: 980 kg-cm (71 ft-lb, 96 N·m)

15. INSTALL INTERCOOLER
(See steps 2, 3 (g) and 4 to 7 on page TC-23 and 24)

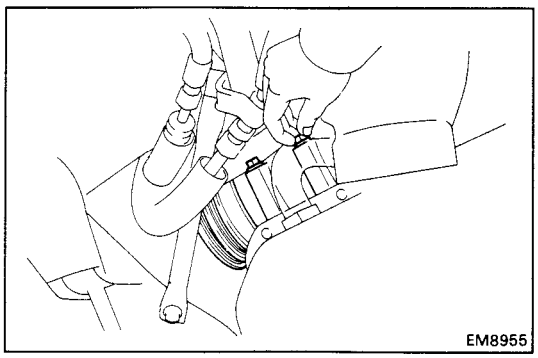

16. INSTALL A/C COMPRESSOR AND IDLER PULLEY BRACKET

(a) Temporarily install the compressor with the two bolts.

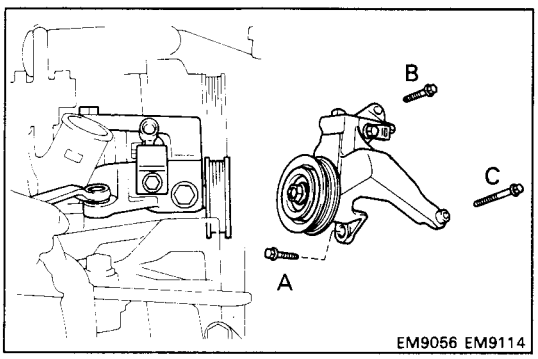

(b) Install the idler pulley bracket with the three bolts.

Torque:
A 275 kg-cm (20 ft-lb, 27 N·m)
B 375 kg-cm (27 ft-lb, 37 N·m)
C 250 kg-cm (18 ft-lb, 25 N·m)

(c) Install the wire clamp of the A/C compressor with the bolt.

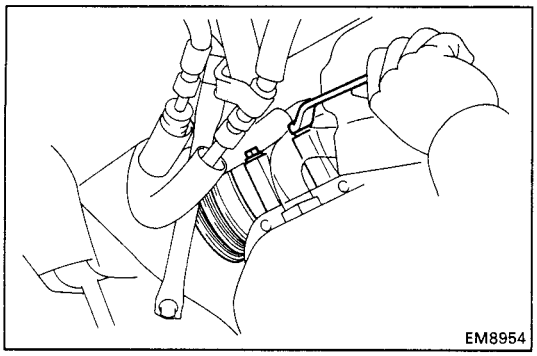

(d) Tighten the two bolts of the lower side holding the A/C compressor to the cylinder block.

Torque: 280 kg-cm (20 ft-lb, 27 N·m)

(e) Connect the A/C compressor connector.

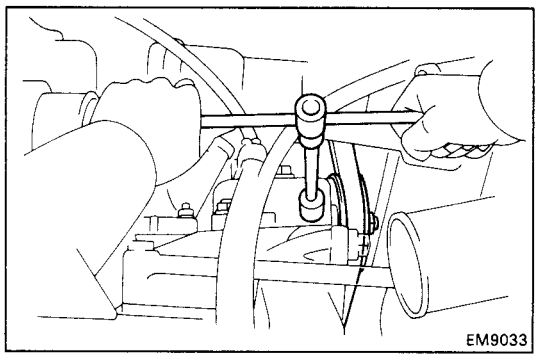

(f) Install and adjust the drive belt with the idler pulley bolt and adjusting bolt.

17. INSTALL ENGINE COMPARTMENT COOLING FAN (See steps 1 and 2 on page CO-36)

18. INSTALL FRONT EXHAUST PIPE

HINT: Passing the exhaust pipe rear side between the body and suspension crossmember is not easy, so follow the method shown in the illustration.

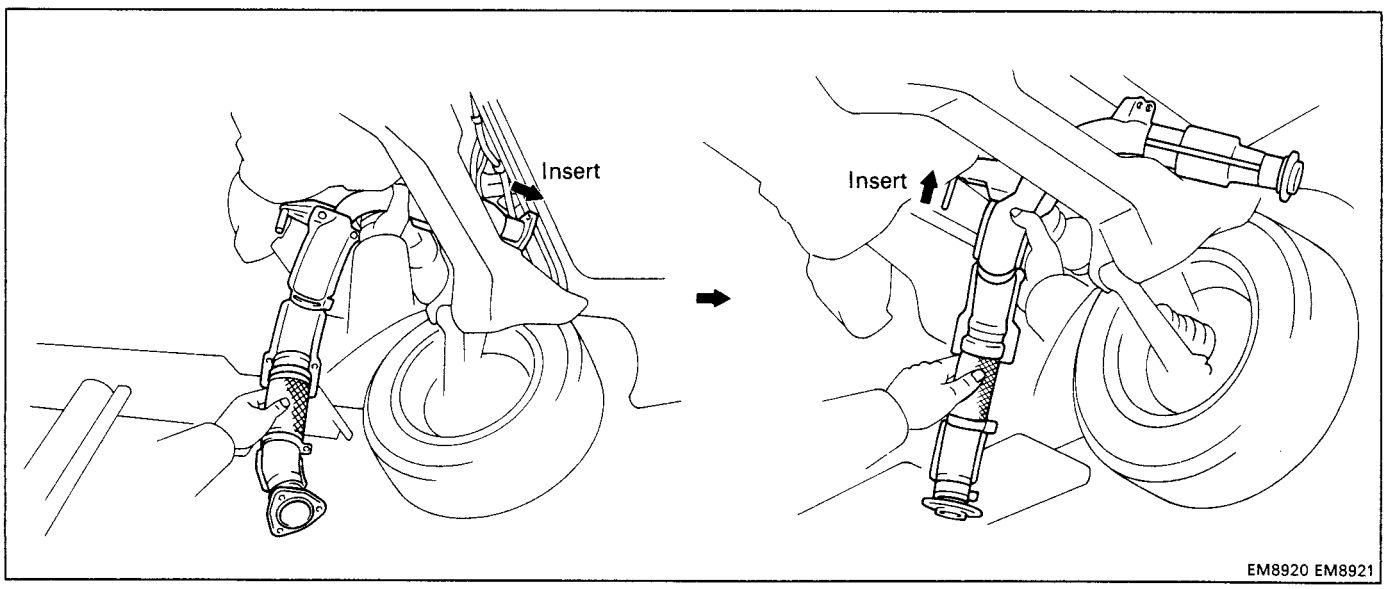

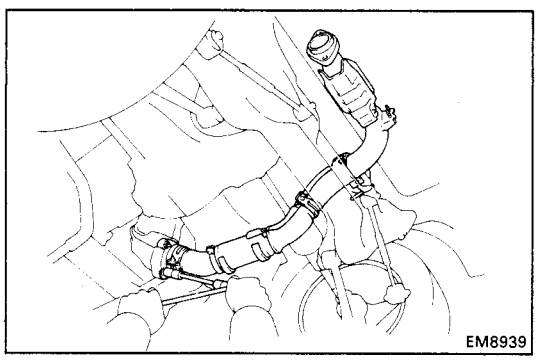

(a) Place a new gasket on the front of the front exhaust pipe.

(b) Using a 14 mm deep socket wrench, install the three new nuts holding the exhaust pipe to the catalytic converter.

Torque: 630 kg-cm (46 ft-lb, 62 N·m)

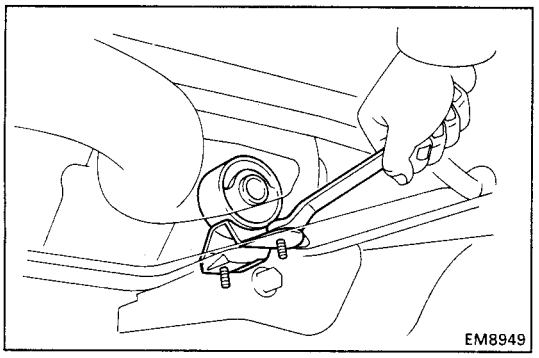

(c) Install the support bracket with the two bolts.

Torque: 210 kg-cm (15 ft-lb, 21 N·m)

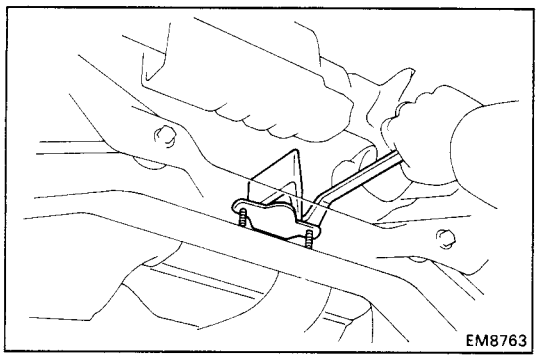

(d) Install the damper with the two bolts.

Torque: 210 kg-cm (15 ft-lb, 21 N·m)

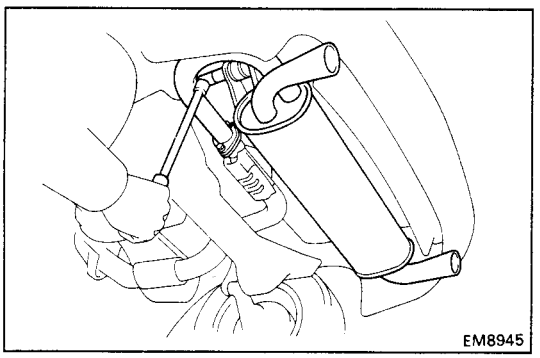

19. INSTALL TAILPIPE

(a) Install the tailpipe with the two through bolts.

Torque: 670 kg-cm (48 ft-lb, 66 N·m)

(b) Place a new gasket between the front exhaust pipe and tailpipe.

(c) Temporarily install the two bolts holding the front exhaust pipe to the tailpipe.

(d) Install the two bolts holding the stopper bracket of the front exhaust pipe to the tailpipe stopper bracket.

Torque: 190 kg-cm (14 ft-lb, 19 N·m)

(e) Tighten the two bolts holding the front exhaust pipe to the tailpipe.

Torque: 440 kg-cm (32 ft-lb, 43 N·m)

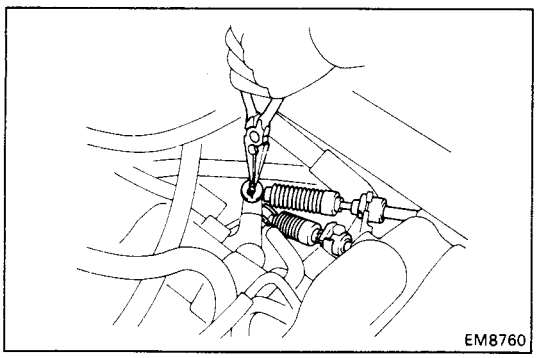

20. CONNECT TRANSAXLE CONTROL CABLES TO TRANSAXLE

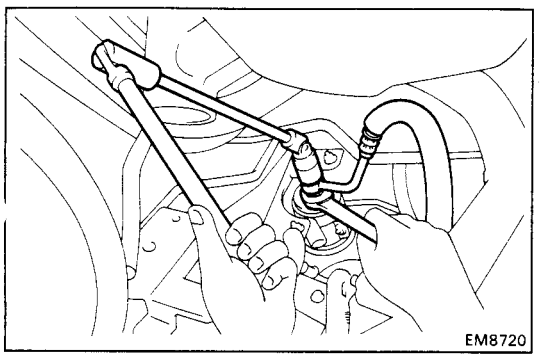

21. CONNECT FUEL INLET HOSE TO FUEL FILTER

Torque: 300 kg-cm (22 ft-lb, 29 N·m)

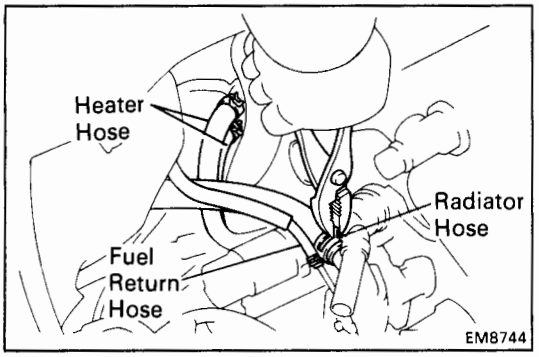

22. CONNECT FUEL RETURN HOSE

23. CONNECT RADIATOR HOSE TO WATER OUTLET

24. CONNECT HEATER HOSES

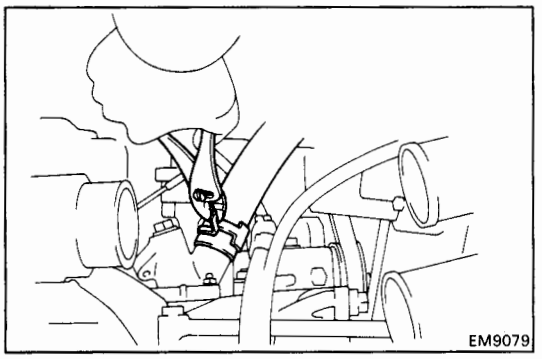

25. CONNECT RADIATOR HOSE TO WATER INLET

26. CONNECT STARTER CABLE

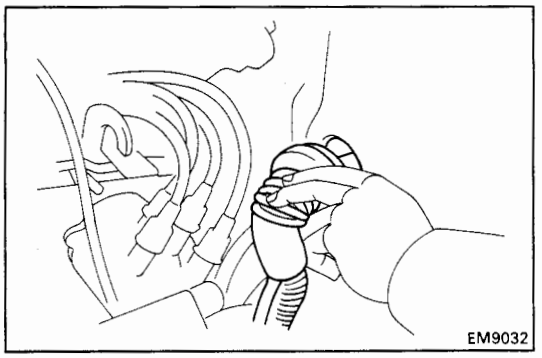

27. CONNECT ENGINE WIRE TO LUGGAGE COMPARTMENT

(a) Push in the engine wire through the luggage compartment.

(b) Connect the following connectors:

(1) Two engine ECU connectors

(2) Starter relay connector

(3) Engine comparment cooling fan relay connector

(4) Engine compartment wire connector

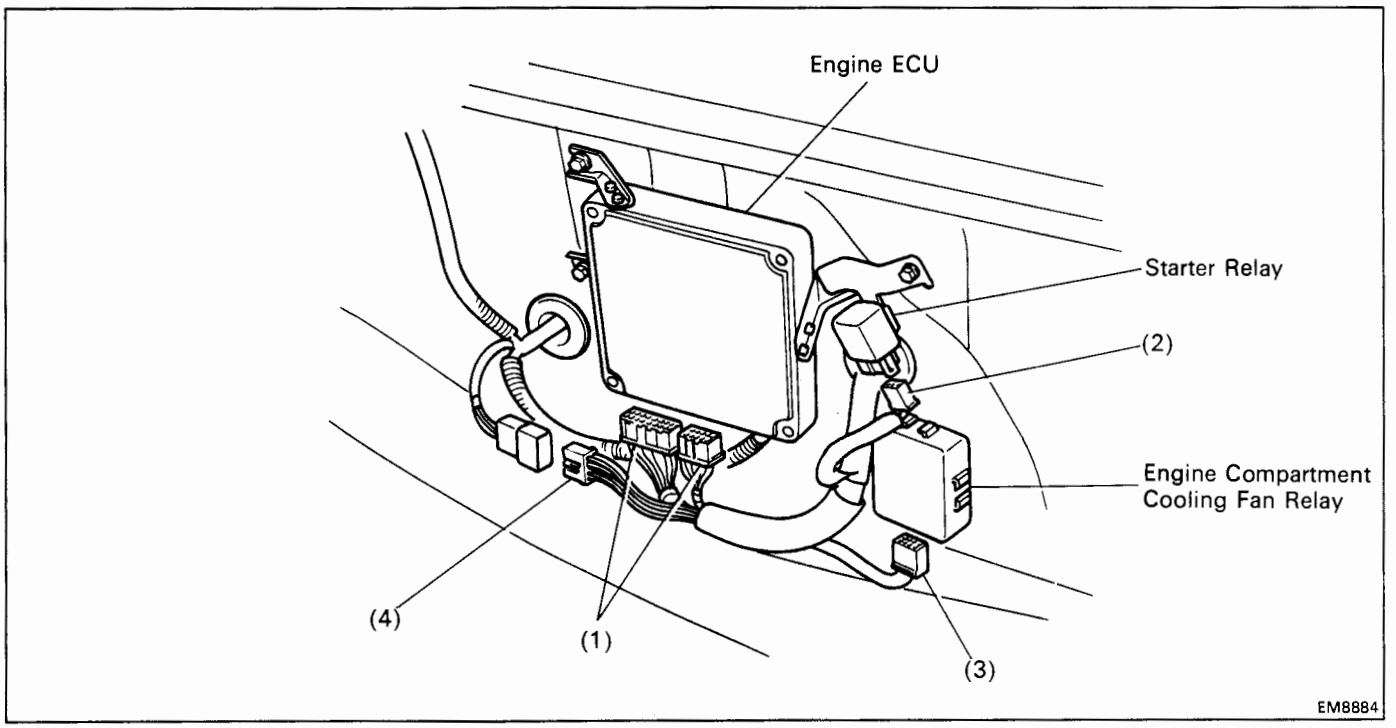

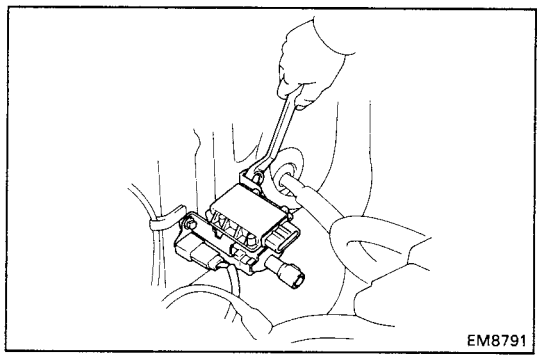

28. INSTALL IGNITION COIL AND IGNITER

(a) Install the ignition coil and igniter assembly with the two bolts. Connect the noise filter.

(b) Connect the high-tension cord.

(c) Connect the ignition coil connector.

(d) Connect the igniter connector.

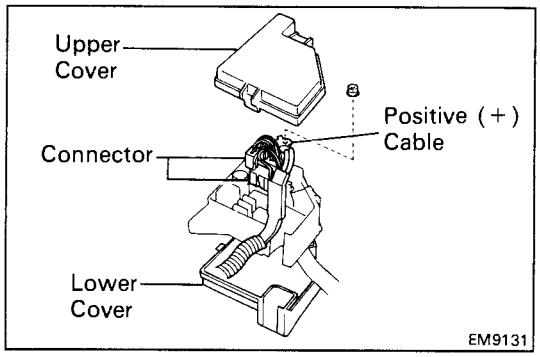

29. CONNECT ENGINE WIRE, AND INSTALL ENGINE RELAY BOX

(a) Connect the two connectors and positive (+) cable of the engine wire to the relay box.

(b) Install the upper and lower covers to the relay box.

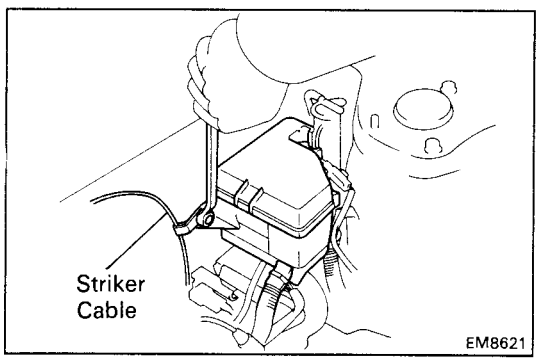

(c) Install the relay box with the two bolts. Install the luggage compartment striker cable.

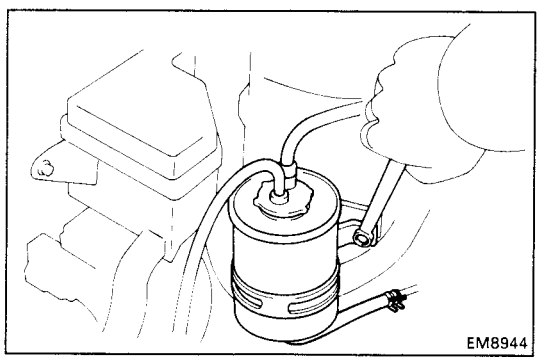

30. INSTALL CHARCOAL CANISTER

(a) Install the charcoal canister with the two bolts.

(b) Connect the three hoses.

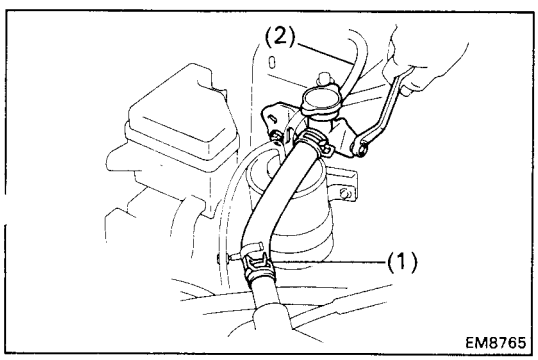

31. INSTALL WATER FILLER

(a) Install the water filler with the two bolts.

(b) Connect the following hoses:

(1) Water filler hose

(2) Coolant reservoir hose

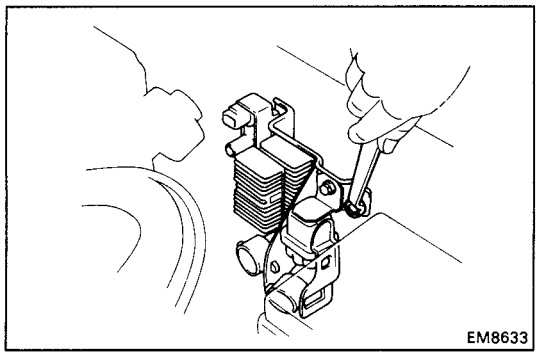

32. INSTALL INJECTOR SOLENOID RESISTOR, FUEL PUMP RELAY, FUEL PUMP RESISTOR AND A/C VSV

(a) Install the solenoid resistor, fuel pump relay, fuel pump resistor assembly and A/C VSV with the two bolts.

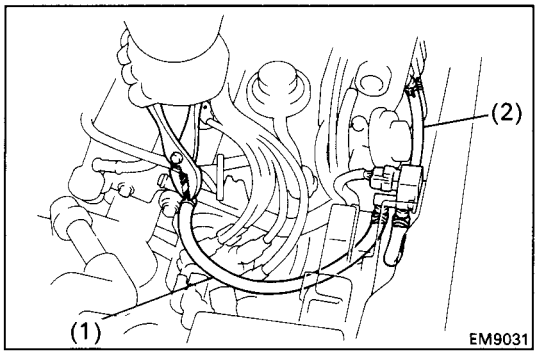

(b) Connect the following hoses:
  (1) A/C VSV air hose from No.2 air tube
  (2) A/C VSV vacuum hose from intake manifold

(c) Connect the following connectors:
- Solenoid resistor connector
- Fuel pump relay connector
- Fuel pump resistor connector
- A/C VSV connector

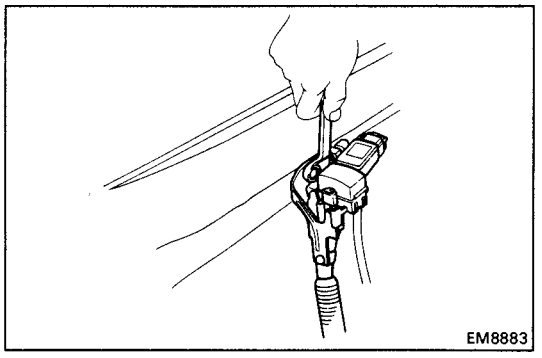

33. INSTALL CHECK CONNECTOR AND TURBOCHARGING PRESSURE SENSOR

Install the check connector and turbocharging pressure sensor with the bolt.

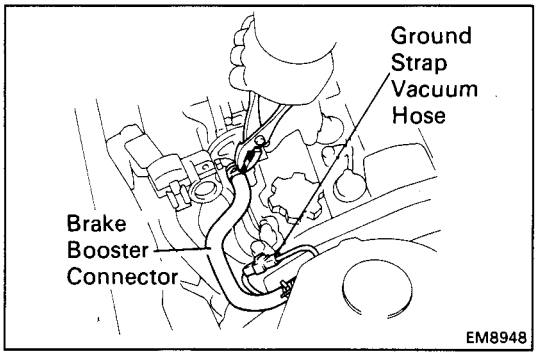

34. CONNECT BRAKE BOOSTER VACUUM HOSE

35. CONNECT GROUND STRAP CONNECTOR

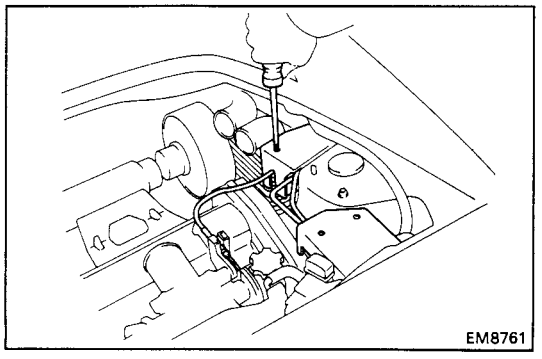

36. INSTALL CRUISE CONTROL ACTUATOR (w/ CRUISE CONTROL SYSTEM) AND ACCELERATOR LINKAGE

(a) Connect the cable to the accelerator linkage.
(b) Install the accelerator linkage with the three bolts.
(c) Connect the actuator connector.
(d) Install the actuator with the three bolts.
(e) Install the accelerator linkage cover with the screw.
(f) Install the actuator cover with the two screws.

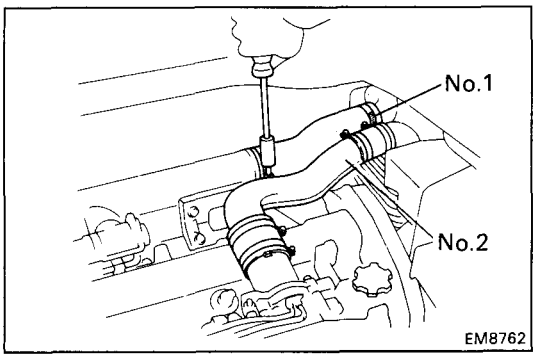

37. INSTALL ACCELERATOR CABLE, AND ADJUST IT

38. INSTALL NO.1 AIR INTAKE CONNECTOR

39. INSTALL NO.2 AIR INTAKE CONNECTOR

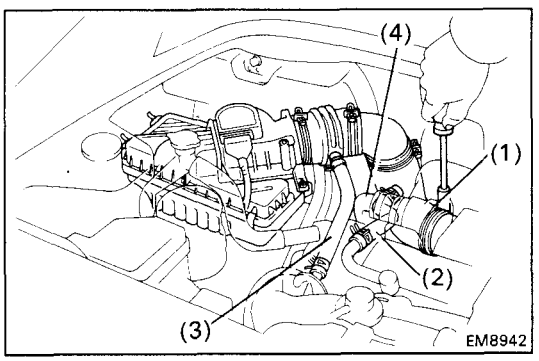

40. INSTALL AIR CLEANER

(a) Install the air cleaner case with the three bolts.

(b) Install the air cleaner element.

(c) Connect the following hose:

(1) Air cleaner hose from turbocharger

(2) PCV hose from cylinder head cover

(3) Air hose from No.2 air tube

(4) Air hose from air by-pass valve

(d) Install the air cleaner cap and air flow meter.

(e) Connect the air flow meter connector.

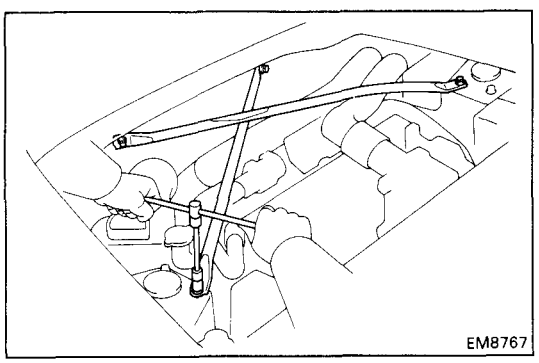

41. INSTALL SUSPENSION UPPER BRACE

Install the suspension upper brace with the two bolts and two nuts.

Torque: Bolt 740 kg-cm (54 ft-lb, 73 N·m)
Nut 650 kg-cm (47 ft-lb, 64 N·m)

42. CONNECT CABLE TO NEGATIVE TERMINAL OF BATTERY

43. FILL WITH ENGINE COOLANT (See page CO-7)

Capacity (w/ Heater):
13.6 liters (14.4 US qts, 12.0 Imp. qts)

44. FILL WITH ENGINE OIL (See page LU-8)

Capacity:
Drain and refill
w/ Oil filter change
3.9 liters (4.1 US qts, 3.4 Imp. qts)
w/o Oil filter change
3.6 liters (3.8 US qts, 3.2 Imp. qts)
Dry fill 4.3 liters (4.5 US qts, 3.8 Imp. qts)

45. START ENGINE AND CHECK FOR LEAKS

46. PERFORM ENGINE ADJUSTMENT

(a) Adjust the alternator drive belt.
(See page CH-3)

Drive belt tension: New belt 120 ± 20 lb
Used belt 104 ± 20 lb

(b) Adjust the A/C drive belt.

Drive belt tension: New belt 160 ± 20 lb
Used belt 100 ± 20 lb

(c) Adjust the ignition timing.
(See steps 9 to 13 on pages IG-17 and 18)

Ignition timing:
10° BTDC @ idle
(w/ Terminals TE1 and E1 connected)

47. INSTALL ENGINE UNDER COVERS

48. INSTALL ENGINE HOOD

49. INSTALL ENGINE COMPARTMENT SIDE PANELS

50. PERFORM ROAD TEST

Check for abnormal noise, shock, slippage, correct shift points and smooth operation.

51. RECHECK ENGINE COOLANT AND OIL LEVELS

CYLINDER BLOCK (5S-FE)

COMPONENTS

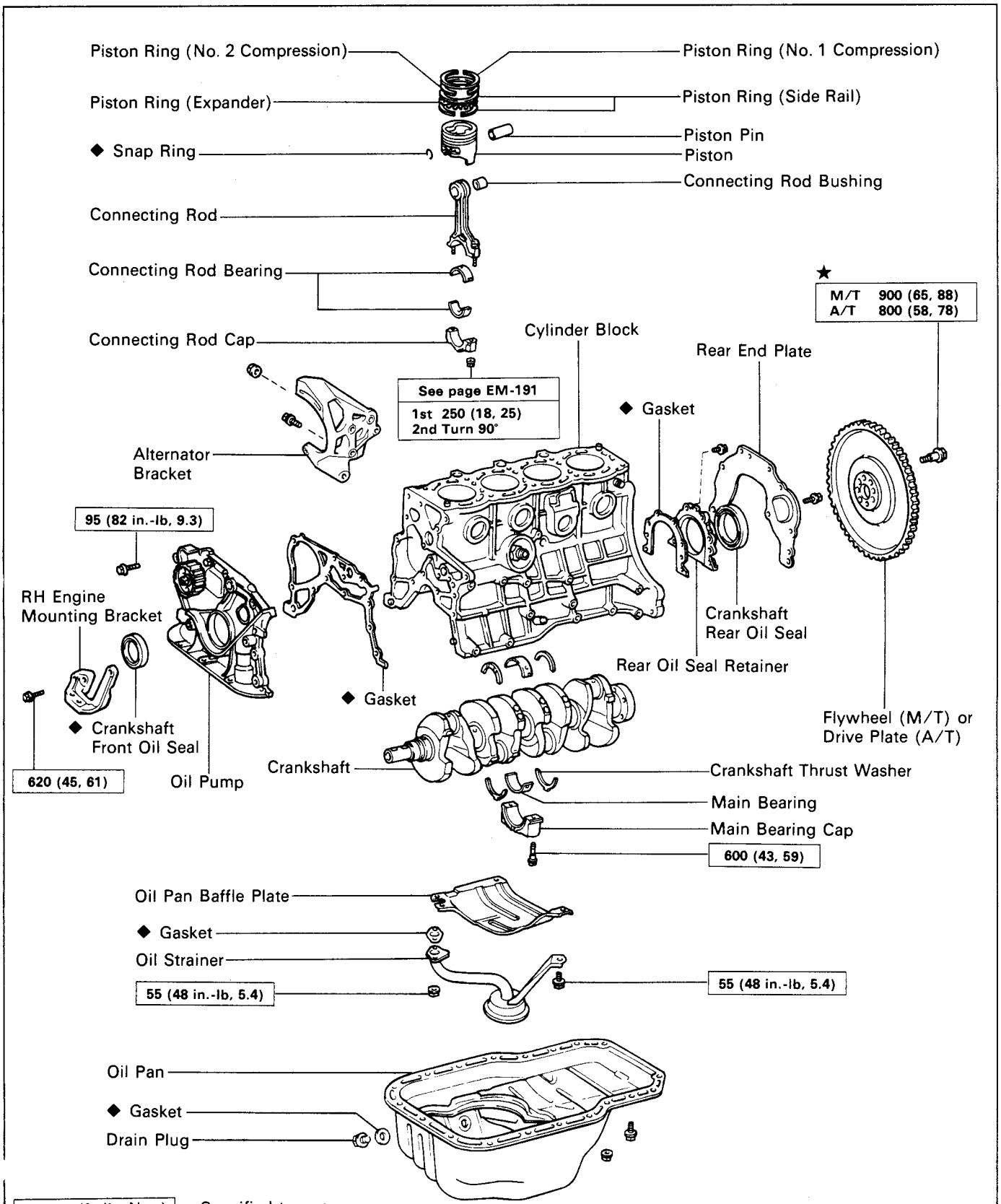

kg-cm (ft-lb, N·m) : Specified torque

◆ Non-reusable part

★ Precoated part

REMOVAL OF ENGINE

1. **DISCONNECT CABLE FROM NEGATIVE TERMINAL OF BATTERY**

   CAUTION: Work must be started after approx. 20 seconds or longer from the time the ignition switch is turned to the "LOCK" position and the negative (–) terminal cable is disconnected from the battery.

2. **REMOVE ENGINE HOOD**

3. **REMOVE ENGINE HOOD SIDE PANELS**

4. **REMOVE ENGINE UNDER COVERS**

5. **DRAIN ENGINE COOLANT (See page CO-6)**

6. **DRAIN ENGINE OIL (See page LU-7)**

7. **DRAIN TRANSAXLE OIL**

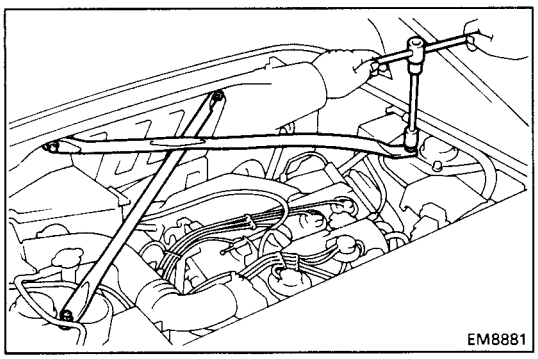

8. **REMOVE SUSPENSION UPPER BRACE**

   Remove the two bolts, two nuts and upper brace.

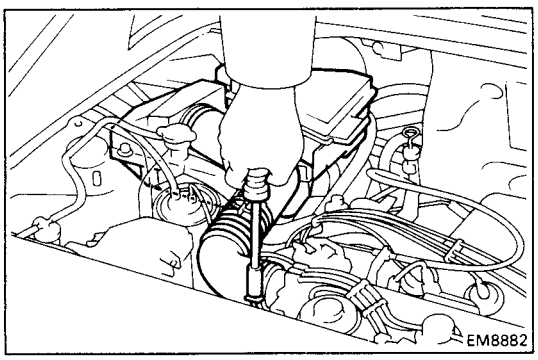

9. **REMOVE AIR CLEANER ASSEMBLY**
   (a) Disconnect the intake air temperature sensor connector.
   (b) Disconnect the four air cleaner cap clips.
   (c) Disconnect the air cleaner hose from the throttle body, and remove the air cleaner cap and element.
   (d) Remove the three bolts and air cleaner case.

10. **DISCONNECT ACCELERATOR CABLE FROM THROTTLE BODY**

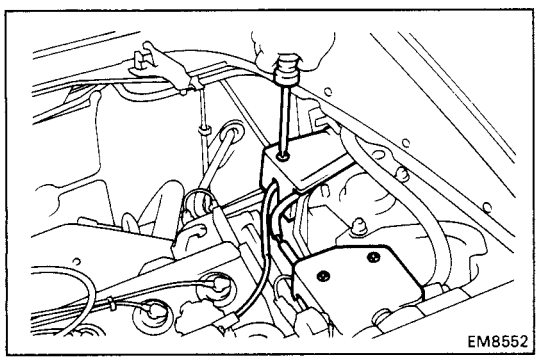

11. **REMOVE CRUISE CONTROL ACTUATOR (w/ CRUISE CONTROL SYSTEM) AND LINKAGE**
    (a) Remove the two screws and actuator cover.
    (b) Remove the screw and accelerator linkage cover.
    (c) Remove the three bolts and actuator.
    (d) Disconnect the actuator connector
    (e) Remove the three bolts and accelerator linkage.
    (f) Disconnect the cable from the accelerator linkage.

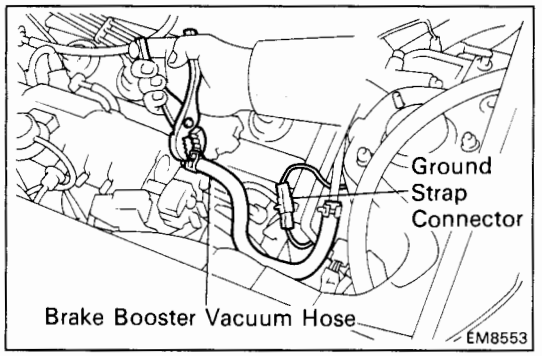

12. DISCONNECT BRAKE BOOSTER VACUUM HOSE

13. DISCONNECT GROUND STRAP CONNECTOR

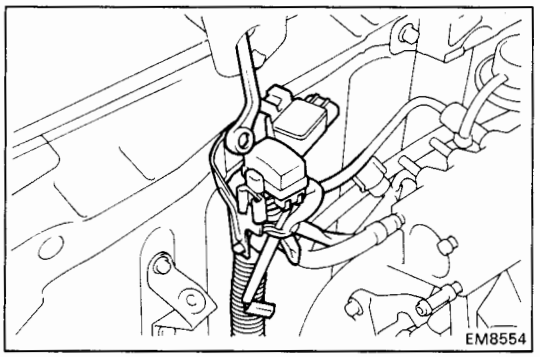

14. REMOVE CHECK CONNECTOR AND VACUUM SENSOR

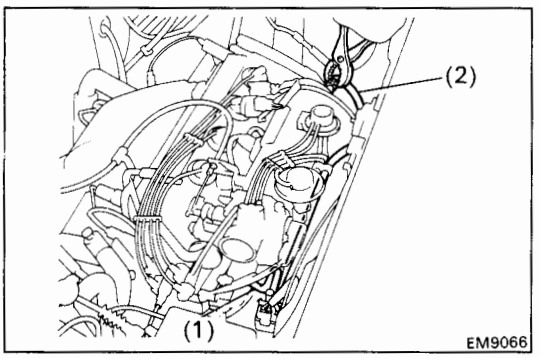

15. REMOVE A/C VSV

(a) Disconnect the A/C VSV connector.

(b) Disconnect the following hoses:

(1) Air hose from ISC valve

(2) Vacuum hose from intake manifold

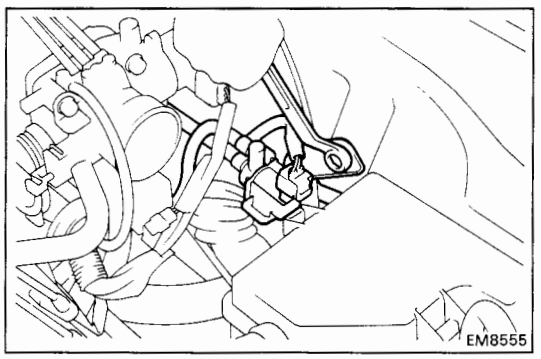

(c) Remove the two bolts and A/C VSV.

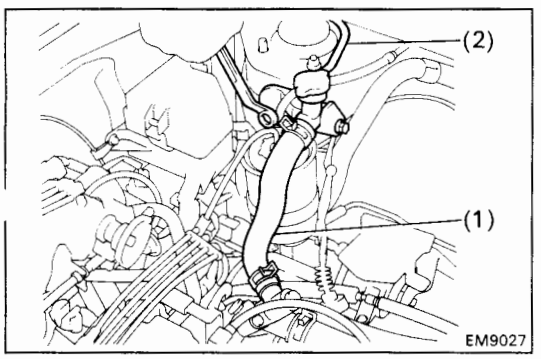

16. REMOVE WATER FILLER

(a) Disconnect the following hose:

(1) Water filler hose

(2) Coolant reservoir hose

(b) Remove the two bolts and water filler.

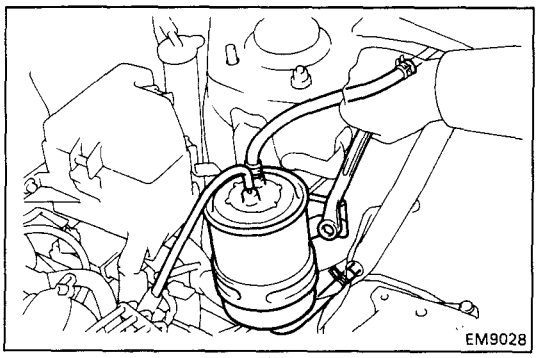

17. REMOVE CHARCOAL CANISTER

(a) Disconnect the three vacuum hoses.

(b) Remove the two bolts and charcoal canister.

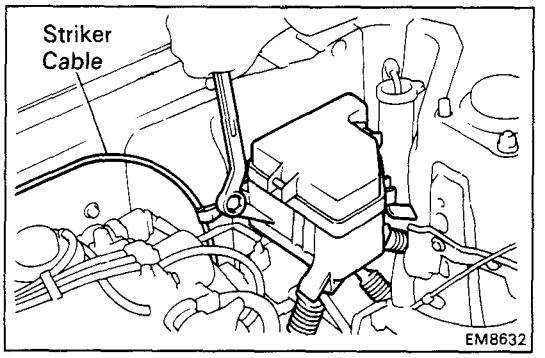

18. REMOVE ENGINE RELAY BOX, AND DISCONNECT ENGINE WIRE

(a) Remove the two bolts and relay box. Disconnect the luggage compartment striker cable.

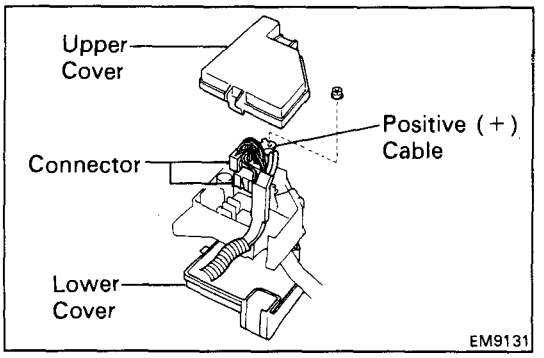

(b) Remove the upper and lower covers from the relay box.

(c) Disconnect the positive (+) cable and two connectors of the engine wire from the relay box.

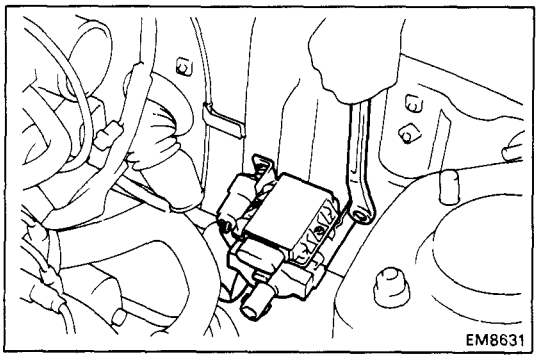

19. REMOVE IGNITION COIL AND IGNITER

(a) Disconnect the ignition coil connector.

(b) Disconnect the igniter connector.

(c) Disconnect the high-tension cord.

(d) Remove the two bolts, the ignition coil and igniter assembly. Disconnect the noise filter.

20. DISCONNECT ENGINE WIRE FROM LUGGAGE COMPARTMENT

(a) Disconnect the following connectors:

(1) Two engine ECU connectors

(2) Starter relay connector

(3) Engine compartment wire connector

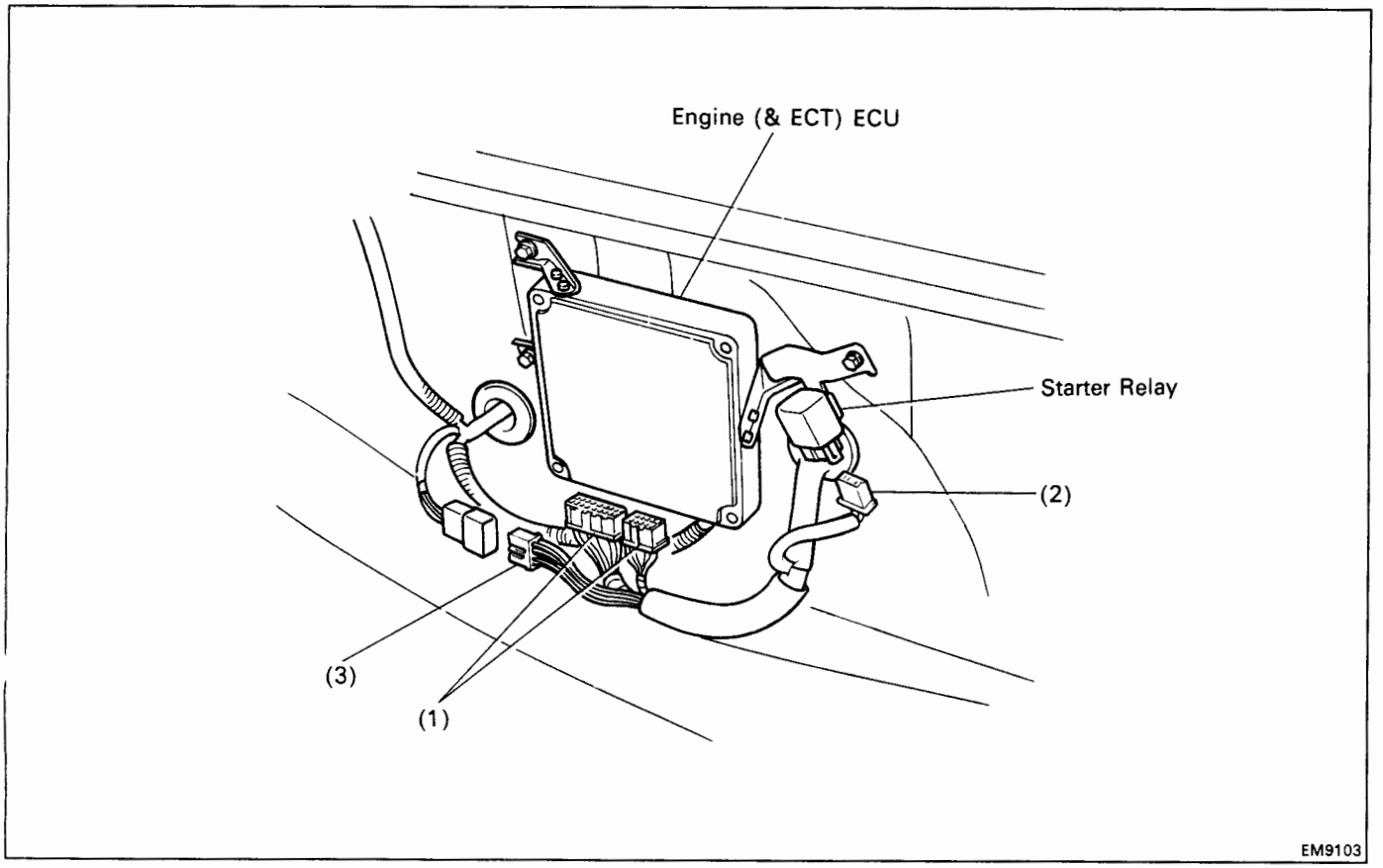

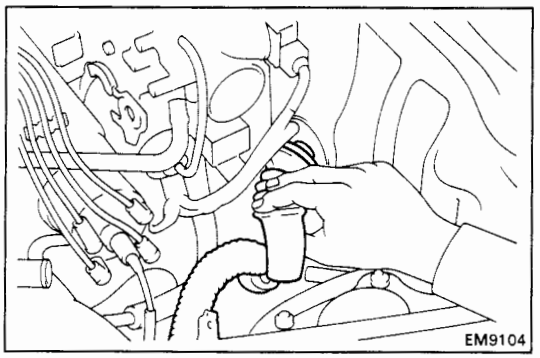

(b) Pull out the engine wire from the luggage compartment.

21. DISCONNECT STARTER CABLE

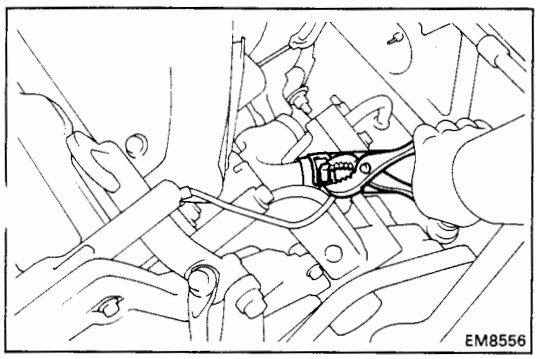

22. DISCONNECT RADIATOR HOSE FROM WATER INLET

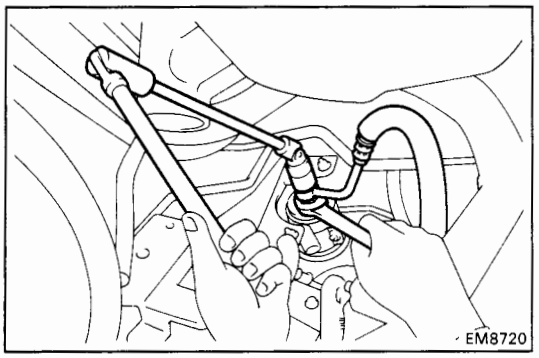

23. DISCONNECT FUEL INLET HOSE

CAUTION: Catch leaking fuel in a container.

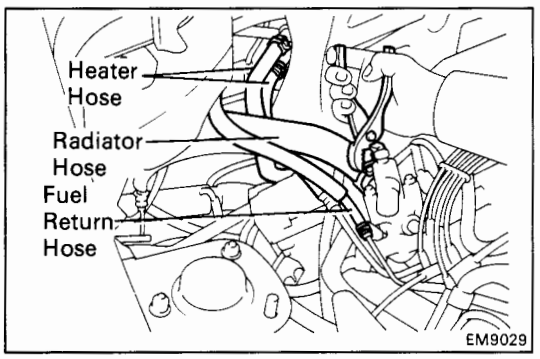

24. DISCONNECT FUEL RETURN HOSE

CAUTION: Catch leaking fuel in a container.

25. DISCONNECT RADIATOR HOSE FROM WATER OUTLET HOUSING

26. DISCONNECT HEATER HOSES

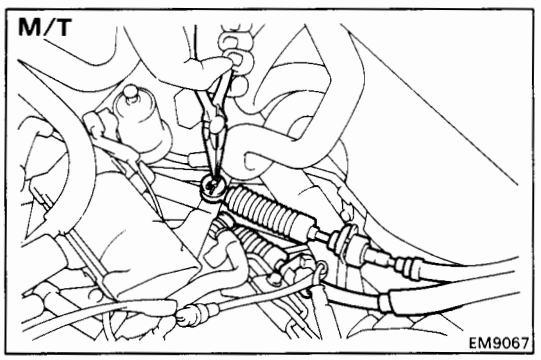

27. DISCONNECT TRANSAXLE CONTROL CABLE(S) FROM TRANSAXLE

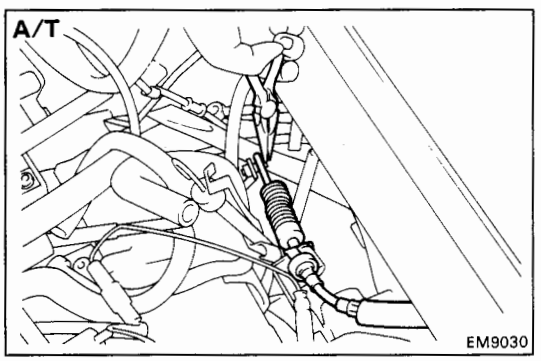

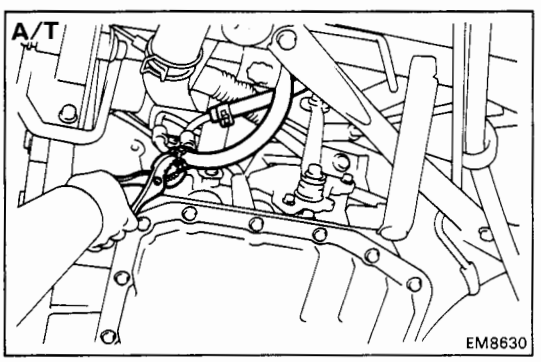

28. (A/T)
DISCONNECT TRANSAXLE OIL COOLER HOSES

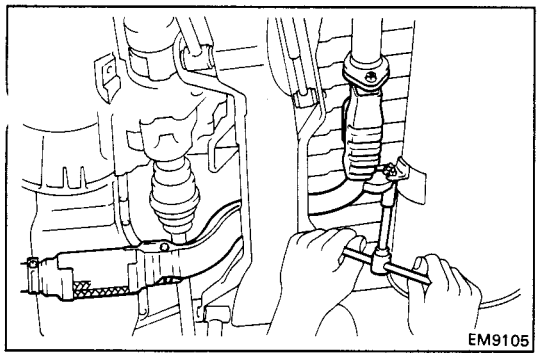

29. REMOVE FRONT EXHAUST PIPE

(a) Remove the two bolts holding the front exhaust pipe to the tailpipe stopper bracket.

(b) Remove the two bolts holding the front exhaust pipe to the tailpipe. Remove the gasket.

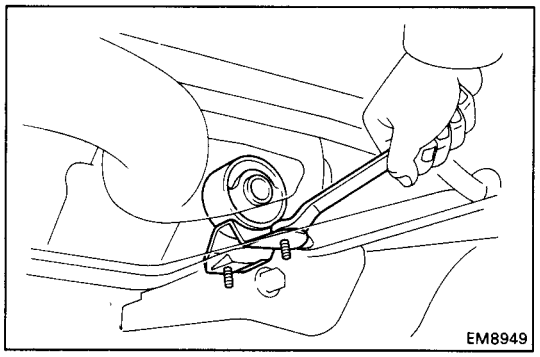

(c) Remove the two bolts and support bracket.

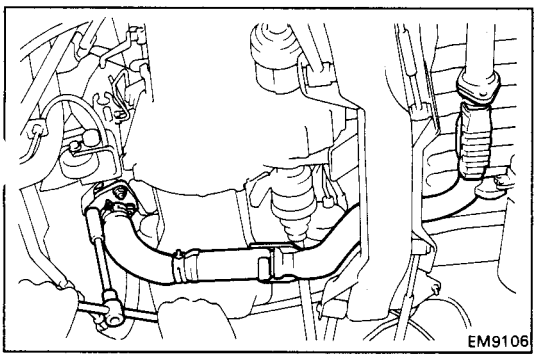

(d) Using a 14 mm deep socket wrench, remove the three nuts, exhaust pipe and gasket.

30. REMOVE DRIVE SHAFT (See pages SA-39 to 41)

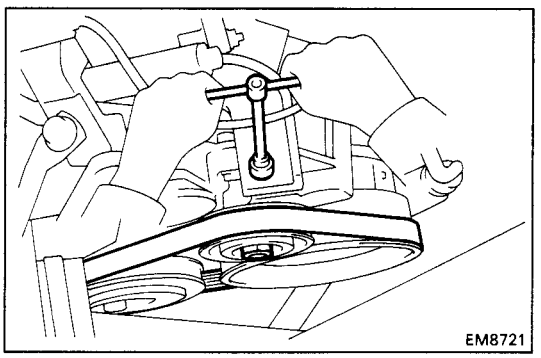

31. REMOVE IDLER PULLEY BRACKET AND A/C COMPRESSOR WITHOUT DISCONNECTING HOSES

(a) Disconnect the idler pulley bolt and adjusting bolt, and remove the drive belt.

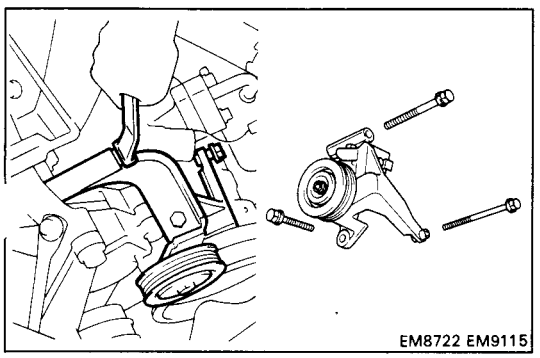

(b) Disconnect the A/C compressor connector.

(c) Remove the bolt and the wire clamp of the A/C compressor.

(d) Remove the three bolts and idler pulley bracket.

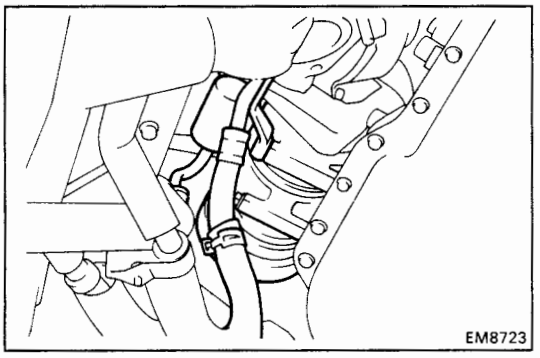

(e) Remove the two bolts, and disconnect the A/C compressor from the engine.

HINT: Put aside the compressor, and suspend it to the radiator support with a string.

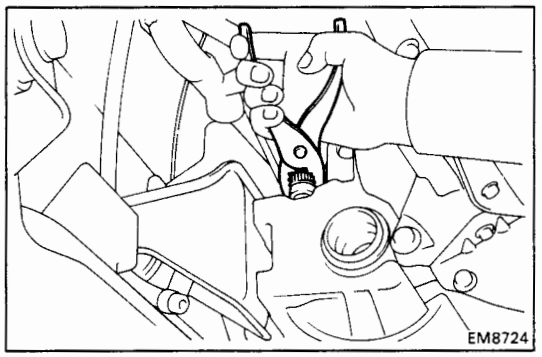

32. DISCONNECT SPEEDOMETER CABLE

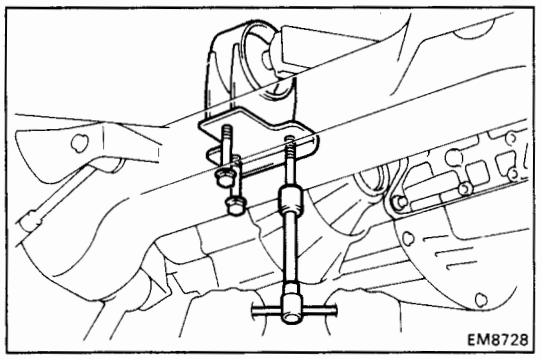

33. REMOVE REAR ENGINE MOUNTING INSULATOR

(a) Remove the through bolt holding the mounting insulator to the mounting bracket.

(b) Remove the three bolts and mounting insulator.

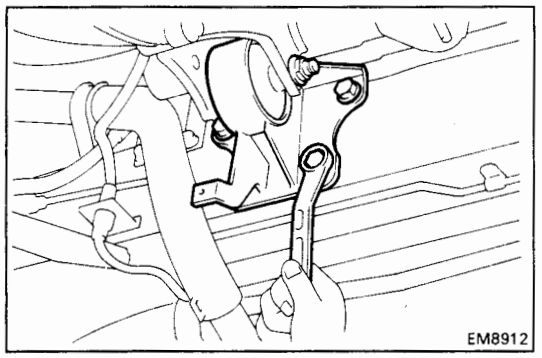

34. REMOVE FRONT ENGINE MOUNTING INSULATOR

(a) Remove the through bolt and nut holding the mounting insulator to the mounting bracket.

(b) Remove the four bolts and mounting insulator.

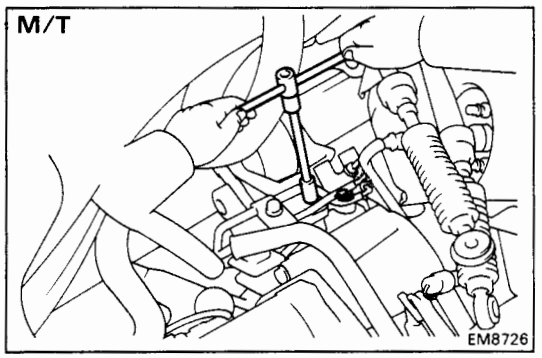

35. REMOVE FRONT ENGINE MOUNTING BRACKET, CLUTCH RELEASE CYLINDER (M/T) AND TRANSAXLE CONTROL CABLE (A/T)

(a) (M/T)
Remove the bolt and nut holding the clutch release cylinder to the transaxle.

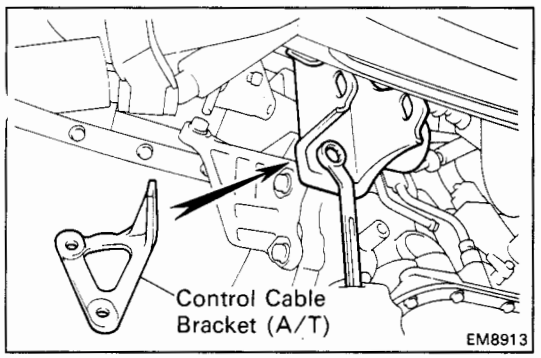

(b) Remove the two bolts and mounting bracket and control cable bracket (A/T).

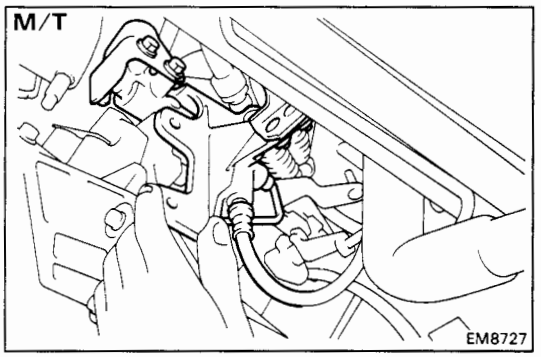

(c) (M/T)
Disconnect the clutch release cylinder without disconnecting the tube.

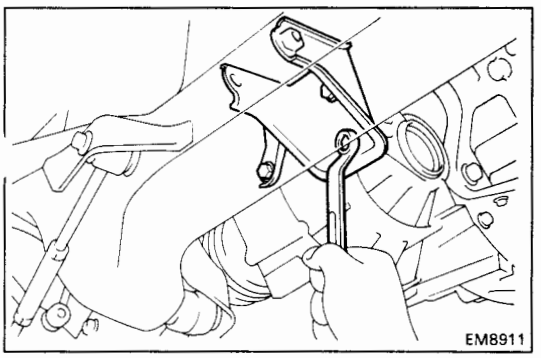

36. REMOVE REAR ENGINE MOUNTING BRACKET

Remove the three bolts and mounting bracket.

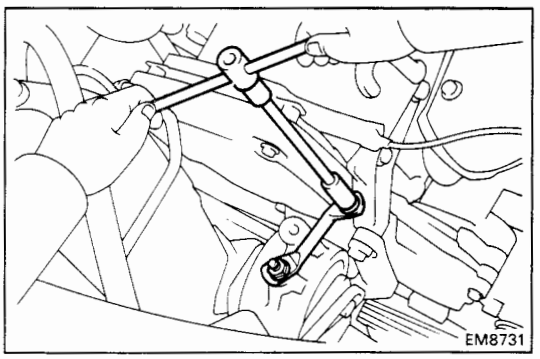

37. REMOVE RH ENGINE MOUNTING STAY

Remove the bolt, nut and mounting stay.

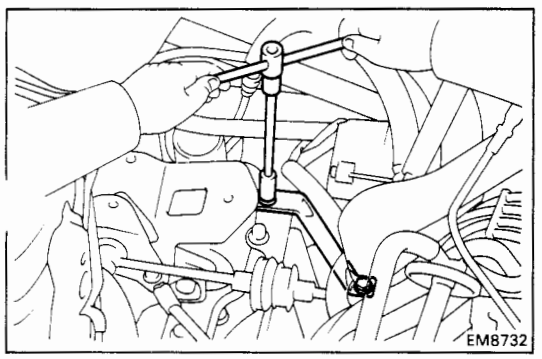

38. (M/T)
REMOVE LH ENGINE MOUNTING STAY

Remove the two bolts, speedometer cable clamp and mounting stay.

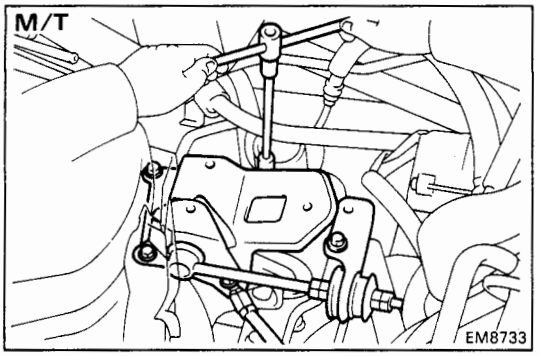

39. REMOVE LATERAL CONTROL ROD (M/T) AND AIR CLEANER CASE BRACKET

(M/T)

Remove the five bolts, the control rod and case bracket. Disconnect the charcoal canister tube and ground strap (from the transaxle).

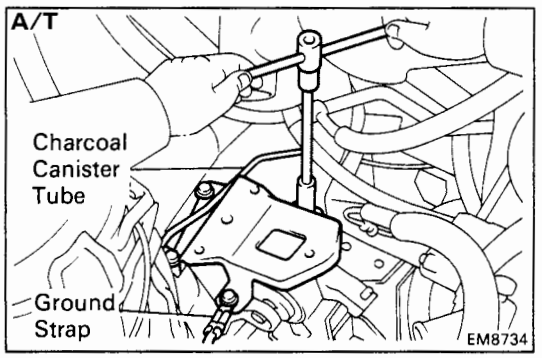

(A/T)

Remove the four bolts and case bracket. Disconnect the charcoal canister tube and ground strap (from the transaxle).

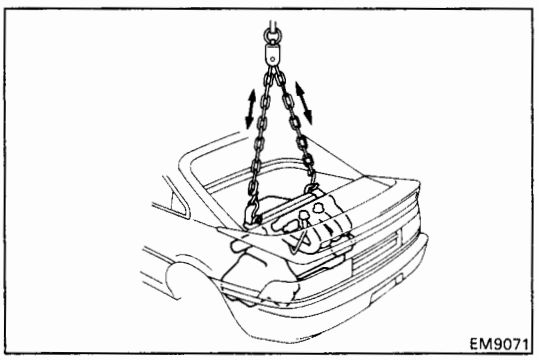

40. REMOVE ENGINE AND TRANSAXLE ASSEMBLY FROM VEHICLE

(a) Attach the engine chain hoist to the engine hangers.

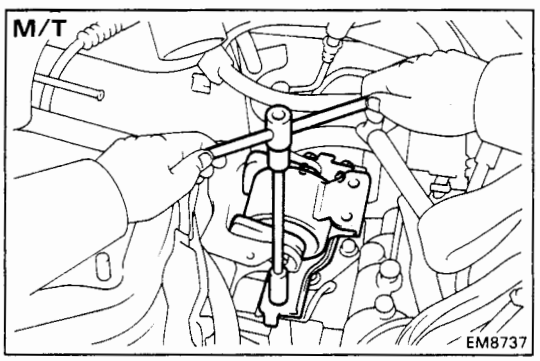

(b) Remove the three (M/T) or four (A/T) bolts holding the LH mounting insulator to the transaxle.

(c) Remove the through bolt, nut and LH mounting insulator.

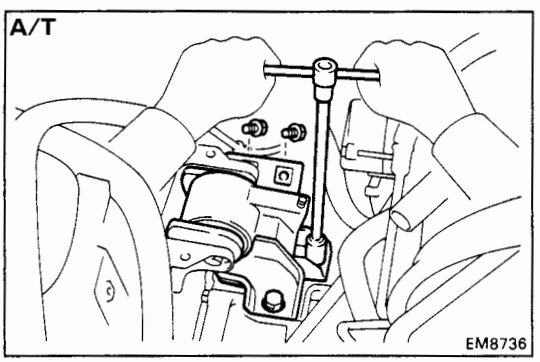

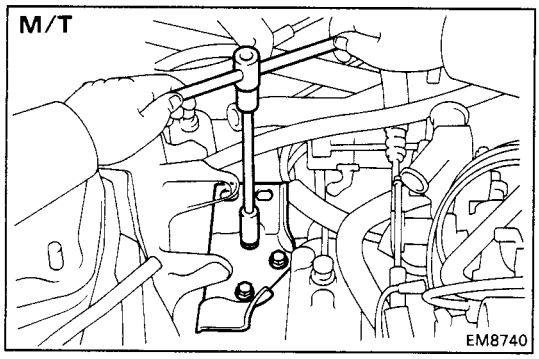

(d) Remove the three (M/T), two (A/T) bolts and LH mounting bracket.

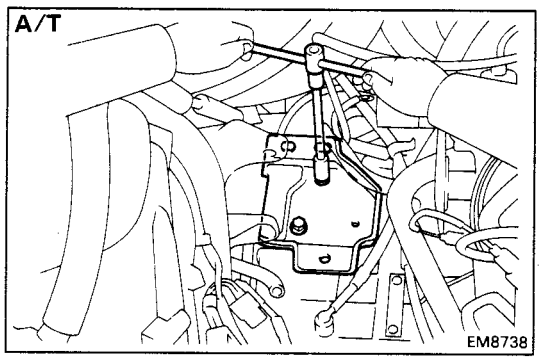

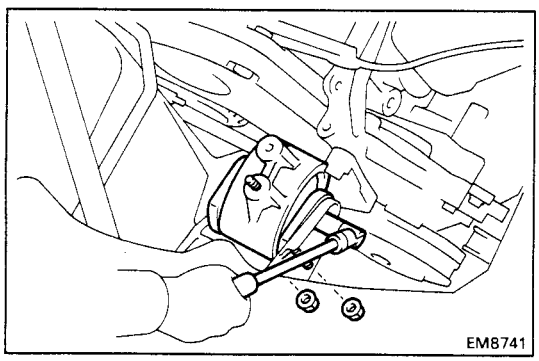

(e) Remove the two nuts holding the RH mounting insulator to the mounting bracket.

(f) Remove the through bolt and RH mounting insulator.

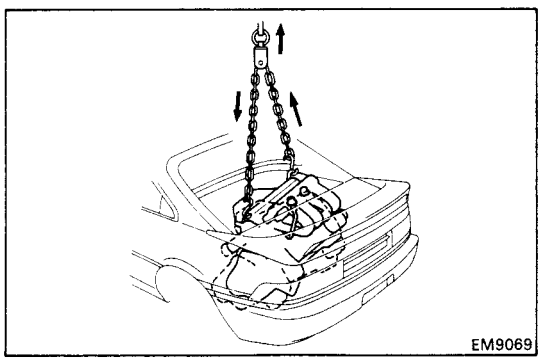

(g) Lift the engine out of the vehicle slowly and carefully.

HINT: Make sure the engine is clear of all wiring, hoses and cables.

(h) Place the engine and transaxle assembly onto the stand.

41. REMOVE STARTER (See page ST-4)

42. SEPARATE ENGINE AND TRANSAXLE
M/T (See pages MT-5 and 6)
A/T (See page AT-41)

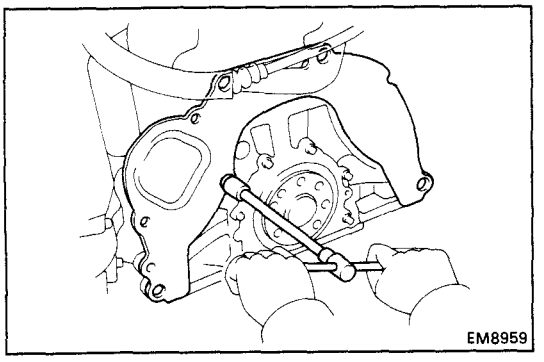

PREPARATION FOR DISASSEMBLY

1. **REMOVE CLUTCH COVER AND DISC**
2. **REMOVE FLYWHEEL**
3. **REMOVE REAR END PLATE**
   Remove the bolt and end plate.
4. **INSTALL ENGINE TO ENGINE STAND FOR DISASSEMBLY**

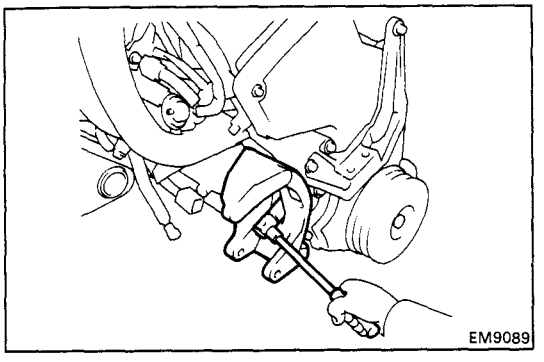

5. **REMOVE ALTERNATOR (See page CH-6)**
6. **REMOVE ALTERNATOR BRACKET**
   Remove the four bolts and mounting bracket.

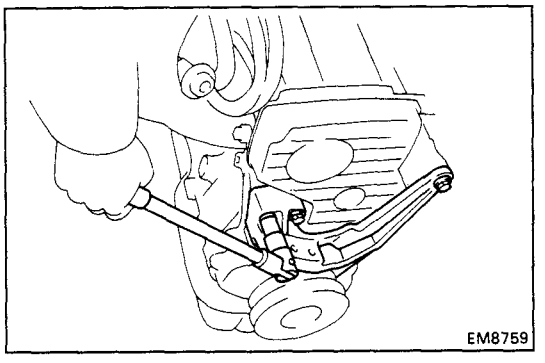

7. **REMOVE RH ENGINE MOUNTING BRACKET**
   Remove the four bolts and mounting bracket.
8. **REMOVE TIMING BELT AND PULLEYS (See pages EM-49 to 53)**
9. **REMOVE CYLINDER HEAD (See pages EM-98 to 107)**
10. **REMOVE WATER PUMP (See page CO-11)**
11. **REMOVE OIL PAN AND OIL PUMP (See pages LU-11 and 12)**
12. **REMOVE OIL FILTER (See page LU-7)**
13. **REMOVE OIL COOLER (See page LU-24)**

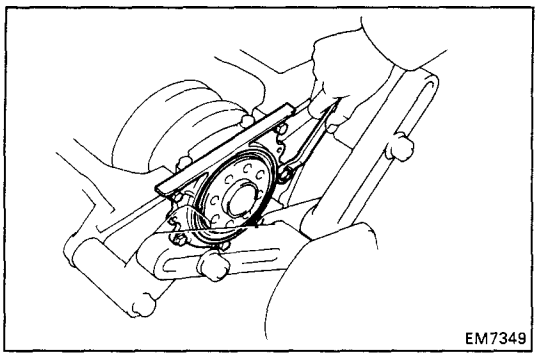

DISASSEMBLY OF CYLINDER BLOCK

(See page EM-181)

1. REMOVE REAR OIL SEAL RETAINER

Remove the six bolts, retainer and gasket.

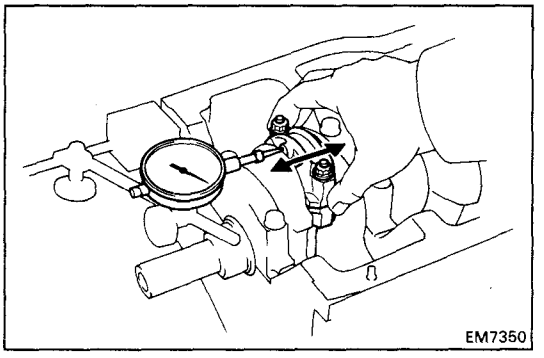

2. CHECK CONNECTING ROD THRUST CLEARANCE

Using a dial indicator, measure the thrust clearance while moving the connecting rod back and forth.

Standard thrust clearance: 0.160 – 0.312 mm (0.0063 – 0.0123 in.)

Maximum thrust clearance: 0.35 mm (0.0138 in.)

If the thrust clearance is greater than maximum, replace the connecting rod assembly. If necessary, replace the crankshaft.

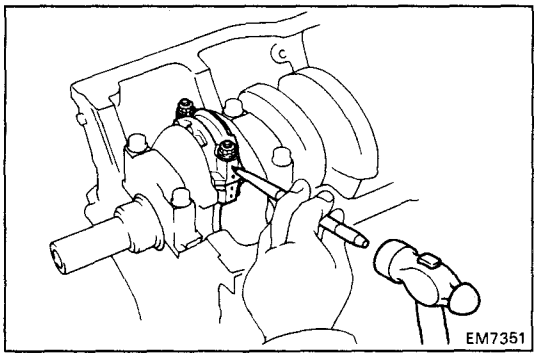

3. REMOVE CONNECTING ROD CAPS AND CHECK OIL CLEARANCE

(a) Using a punch or numbering stamp, place the matchmarks on the connecting rod and cap to ensure correct reassembly.

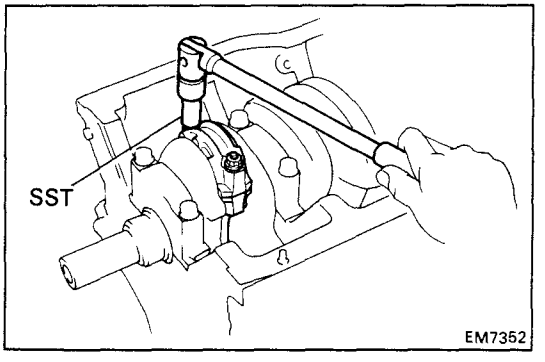

(b) Using SST, remove the connecting rod cap nuts.

SST 09011-38121

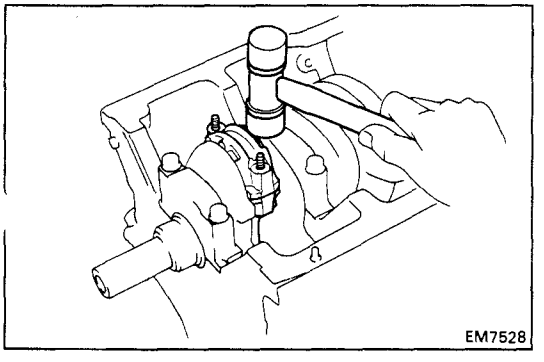

(c) Using a plastic-faced hammer, lightly tap the connecting rod bolts and lift off the connecting rod cap.

HINT: Keep the lower bearing inserted with the connecting cap.

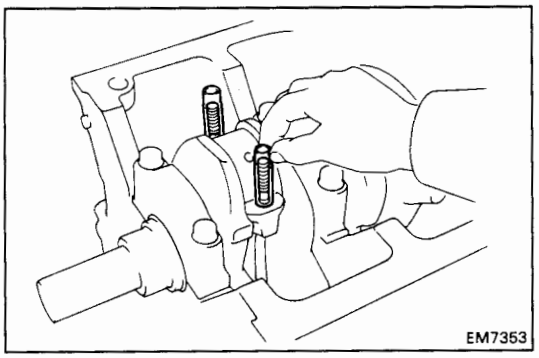

(d) Cover the connecting rod bolts with a short piece of hose to protect the crankshaft from damage.

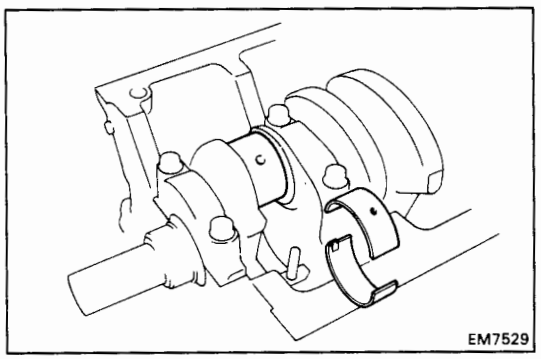

(e) Clean crank pin and bearing.

(f) Check the crank pin and bearing for pitting and scratches.

If the crank pin or bearing is damaged, replace the bearings. If necessary, grind or replace the crankshaft.

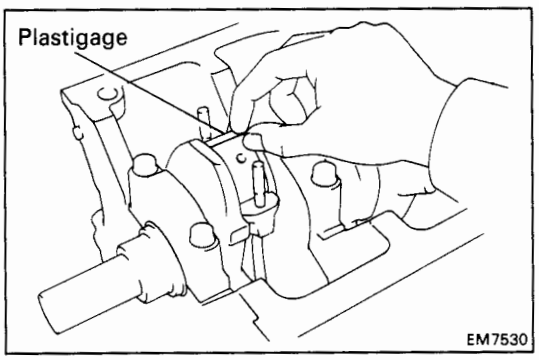

(g) Lay a strip of Plastigage across the crank pin.

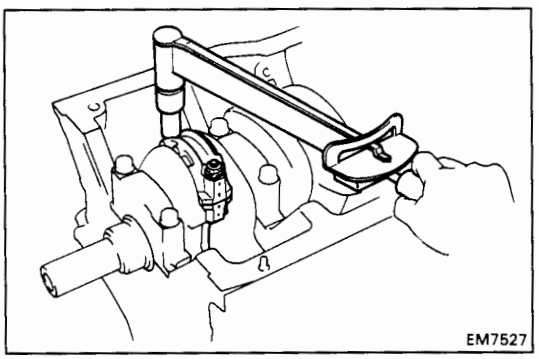

(h) Install the connecting rod cap.
(See step 6 on pages EM-213 and 214)

Torque: 1st 250 kg-cm (18 ft-lb, 25 N·m)
2nd Turn 90°

NOTICE: Do not turn the crankshaft.

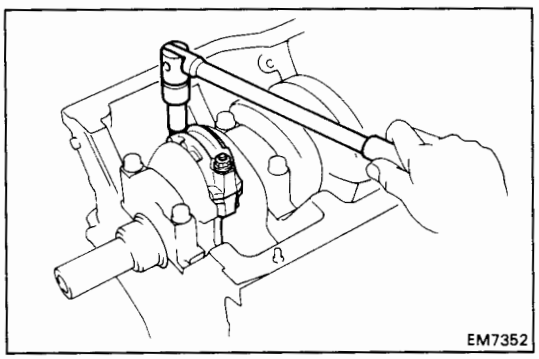

(i) Remove the connecting rod cap.
(See procedures (b) and (c) above)

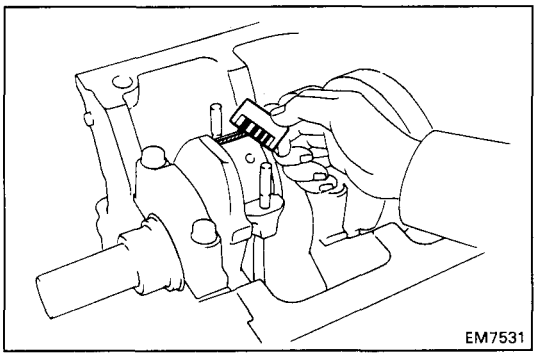

(j) Measure the Plastigage at its widest point.

Standard oil clearance:

STD	**0.024 – 0.055 mm (0.0009 – 0.0022 in.)**
U/S 0.25	**0.023 – 0.069 mm (0.0009 – 0.0027 in.)**

Maximum oil clearance: 0.08 mm (0.0031 in.)

If the oil clearance is greater than maximum, replace the bearings. If necessary, grind or replace the crankshaft.

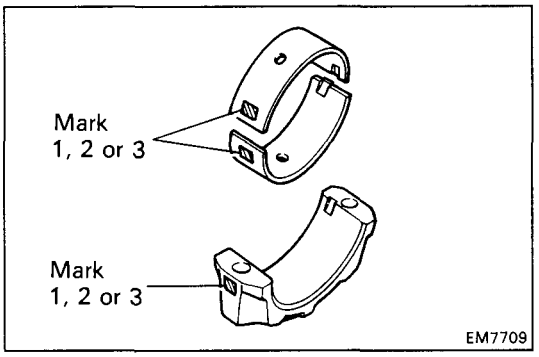

HINT: If using a standard bearing, replace it with one having the same number marked on the connecting rod cap. There are three sizes of standard bearings, marked "1", "2" and "3" accordingly.

Standard sized bearing center wall thickness:

Mark "1"	**1.484 – 1.488 mm (0.0584 – 0.0586 in.)**
Mark "2"	**1.488 – 1.492 mm (0.0586 – 0.0587 in.)**
Mark "3"	**1.492 – 1.496 mm (0.0587 – 0.0589 in.)**

(k) Completely remove the Plastigage.

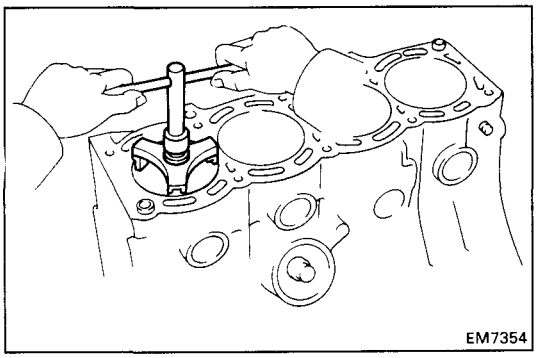

4. REMOVE PISTON AND CONNECTING ROD ASSEMBLIES

(a) Using a ridge reamer, remove all the carbon from the top of the cylinder.

(b) Cover the connecting rod bolts.
(See page EM-194)

(c) Push the piston, connecting rod assembly and upper bearing through the top of the cylinder block.

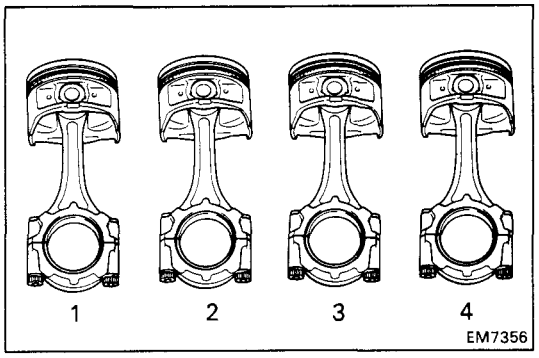

HINT:
- Keep the bearings, connecting rod and cap together.
- Arrange the piston and connecting rod assemblies in correct order.

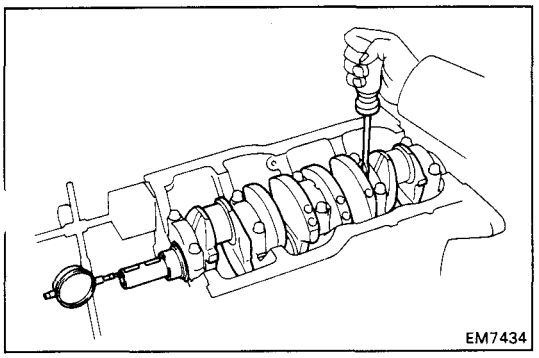

5. CHECK CRANKSHAFT THRUST CLEARANCE

Using a dial indicator, measure the thrust clearance while prying the crankshaft back and forth with a screwdriver.

Standard thrust clearance: 0.020 – 0.220 mm (0.0008 – 0.0087 in.)

Maximum thrust clearance: 0.30 mm (0.0118 in.)

If the thrust clearance is greater than maximum, replace the thrust washers as a set.

Thrust washer thickness: 2.440 – 2.490 mm (0.0961 – 0.0980 in.)

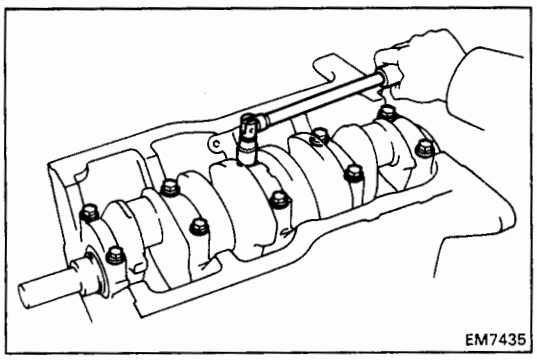

6. REMOVE MAIN BEARING CAPS AND CHECK OIL CLEARANCE

(a) Remove the main bearing cap bolts.

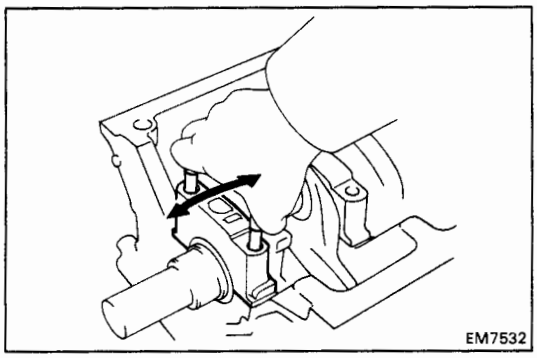

(b) Using the removed main bearing cap bolts, pry the main bearing cap back and forth, and remove the main bearing caps, lower bearings and lower thrust washers (No.3 main bearing cap only).

HINT:
- Keep the lower bearing and main bearing cap together.
- Arrange the main bearing caps and lower thrust washers in correct order.

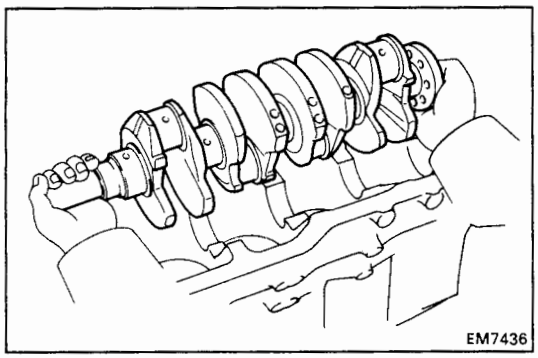

(c) Lift out the crankshaft.

HINT: Keep the upper bearing and upper thrust washers together with the cylinder block.

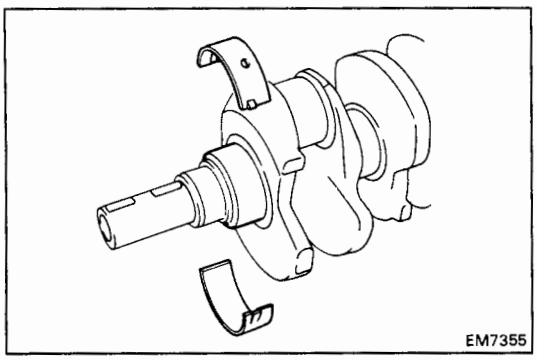

(d) Clean each main journal and bearing.

(e) Check each main journal and bearing for pitting and scratches.

If the journal or bearing is damaged, replace the bearings. If necessary, grind or replace the crankshaft.

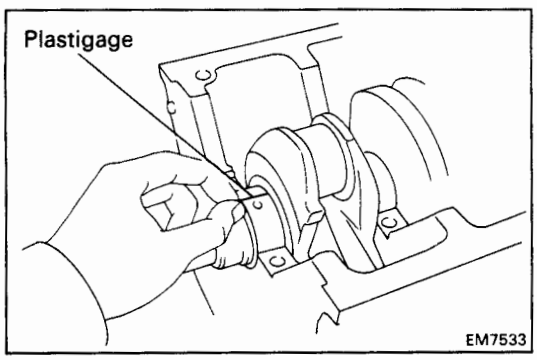

(f) Place the crankshaft on the cylinder block.

(g) Lay a strip of Plastigage across each journal.

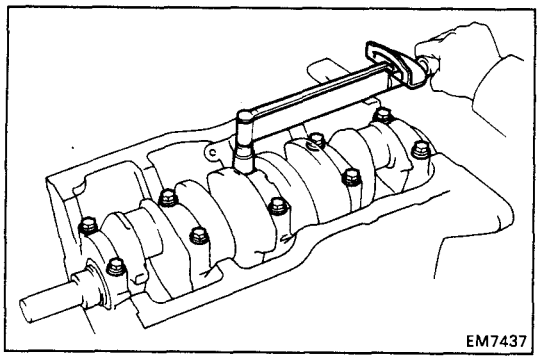

(h) Install the main bearing caps.
(See step 4 on page EM-212)

Torque: 600 kg-cm (43 ft-lb, 59 N·m)

NOTICE: Do not turn the crankshaft.

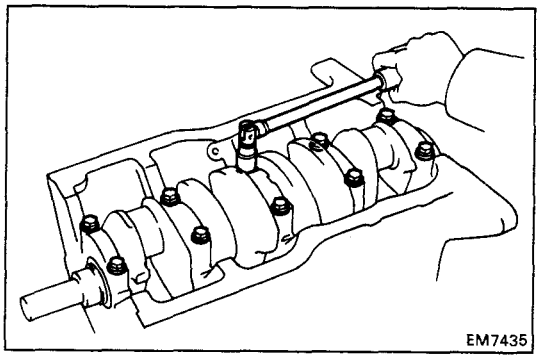

(i) Remove the main bearing caps.
(See procedures (a) and (b) above)

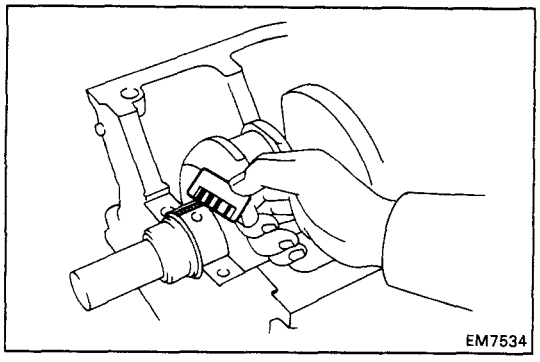

(j) Measure the Plastigage at its widest point.

Standard clearance:

No.3	**STD**	**0.025 – 0.044 mm (0.0010 – 0.0017 in.)**
	U/S 0.25	**0.027 – 0.067 mm (0.0011 – 0.0026 in.)**
Others	**STD**	**0.015 – 0.034 mm (0.0006 – 0.0013 in.)**
	U/S 0.25	**0.019 – 0.059 mm (0.0007 – 0.0023 in.)**

Maximum clearance: 0.08 mm (0.0031 in.)

HINT: If replacing the cylinder block subassembly, the bearing standard clearance will be:

No.3	**0.027 – 0.054 mm (0.0011 – 0.0021 in.)**
Others	**0.017 – 0.044 mm (0.0007 – 0.0017 in.)**

If the oil clearance is greater than maximum, replace the bearings. If necessary, grind or replace the crankshaft.

HINT: If using a standard bearing, replace it with one having the same number. If the number of the bearing cannot be determined, select the correct bearing by adding together the numbers imprinted on the cylinder block and crankshaft, then select the bearing with the same number as the total. There are five sizes of standard bearings, marked "1," "2," "3," "4" and "5" accordingly.

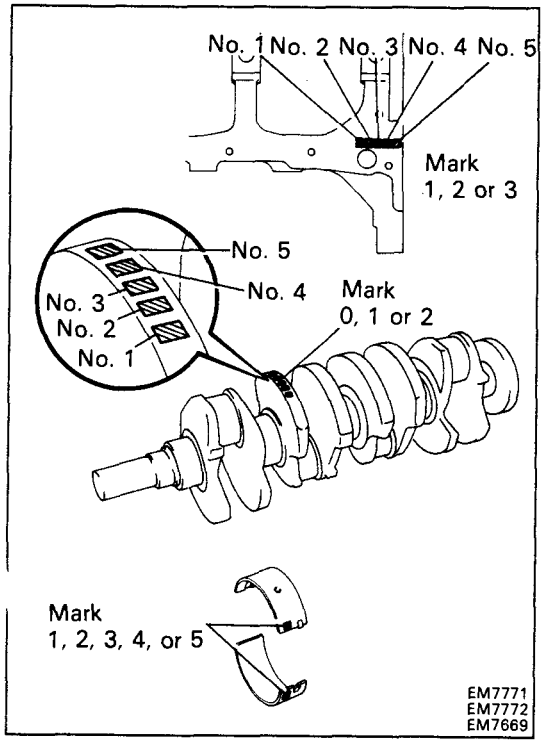

	Number marked								
Cylinder block	1			2			3		
Crankshaft	0	1	2	0	1	2	0	1	2
Bearing	1	2	3	1	2	3	1	2	3

EXAMPLE: Cylinder block "2" + Crankshaft "1" = Bearing "3"

(Reference)
Cylinder block main journal bore diameter:

Mark "1"	59.020 – 59.026 mm (2.3236 – 2.3239 in.)
Mark "2"	59.026 – 59.032 mm (2.3239 – 2.3241 in.)
Mark "3"	59.032 – 59.038 mm (2.3241 – 2.3243 in.)

Crankshaft journal diameter:

Mark "0"	54.998 – 55.003 mm (2.1653 – 2.1655 in.)
Mark "1"	54.993 – 54.998 mm (2.1651 – 2.1653 in.)
Mark "2"	54.988 – 54.993 mm (2.1649 – 2.1651 in.)

Standard sized bearing center wall thickness:

No.3	Mark "1"	1.992 – 1.995 mm (0.0784 – 0.0785 in.)
	Mark "2"	1.995 – 1.998 mm (0.0785 – 0.0787 in.)
	Mark "3"	1.998 – 2.001 mm (0.0787 – 0.0788 in.)
	Mark "4"	2.001 – 2.004 mm (0.0788 – 0.0789 in.)
	Mark "5"	2.004 – 2.007 mm (0.0789 – 0.0790 in.)
Others	Mark "1"	1.997 – 2.000 mm (0.0786 – 0.0787 in.)
	Mark "2"	2.000 – 2.003 mm (0.0787 – 0.0789 in.)
	Mark "3"	2.003 – 2.006 mm (0.0789 – 0.0790 in.)
	Mark "4"	2.006 – 2.009 mm (0.0790 – 0.0791 in.)
	Mark "5"	2.009 – 2.012 mm (0.0791 – 0.0792 in.)

(k) Completely remove the Plastigage.

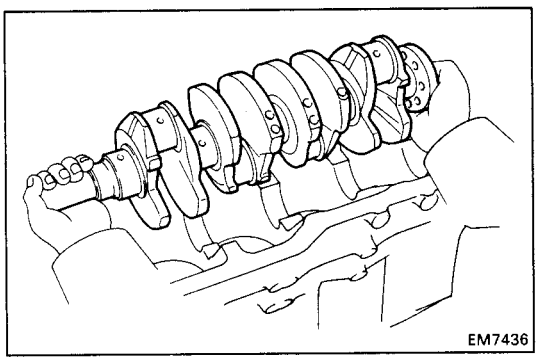

7. REMOVE CRANKSHAFT

(a) Lift out the crankshaft.

(b) Remove the upper bearings and upper thrust washers from the cylinder block.

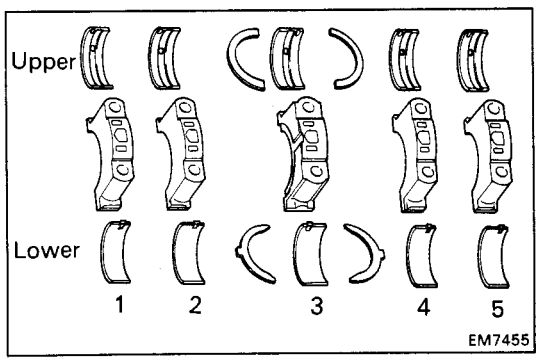

HINT: Arrange the main bearing caps, bearings and thrust washers in correct order.

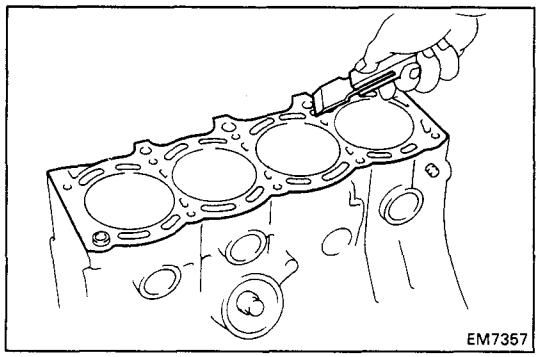

INSPECTION OF CYLINDER BLOCK

1. CLEAN CYLINDER BLOCK

A. Remove gasket material

Using a gasket scraper, remove all the gasket material from the top surface of the cylinder block.

B. Clean cylinder block

Using a soft brush and solvent, thoroughly clean the cylinder block.

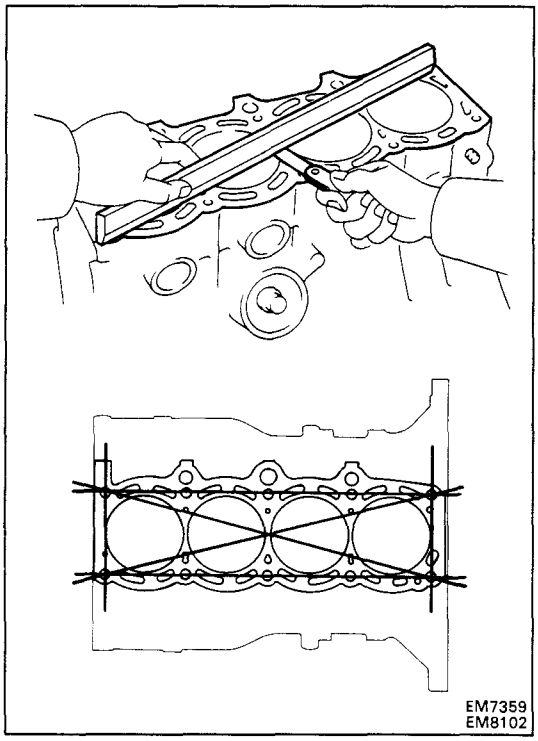

2. INSPECT TOP SURFACE OF CYLINDER BLOCK FOR FLATNESS

Using a precision straight edge and feeler gauge, measure the surfaces contacting the cylinder head gasket for warpage.

Maximum warpage: 0.05 mm (0.0020 in.)

If warpage is greater than maximum, replace the cylinder block.

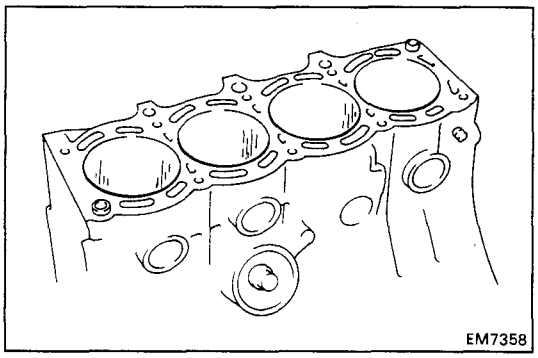

3. INSPECT CYLINDER FOR VERTICAL SCRATCHES

Visually check the cylinder for vertical scratches.

If deep scratches are present, rebore all the four cylinders. If necessary, replace the cylinder block.

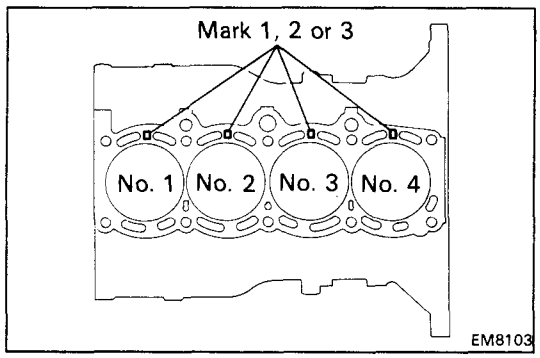

4. INSPECT CYLINDER BORE DIAMETER

HINT: There are three sizes of the standard cylinder bore diameter, marked "1", "2" and "3" accordingly. The mark is stamped on the top of the cylinder block.

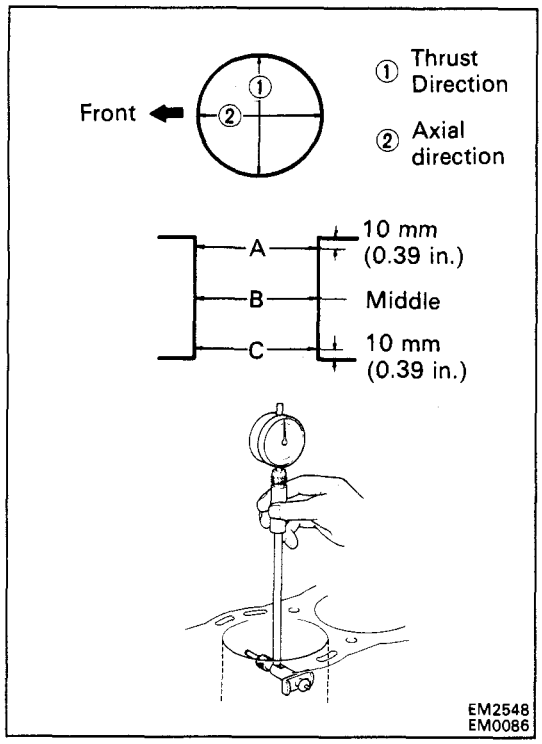

Using a cylinder gauge, measure the cylinder bore diameter at positions A, B and C in the thrust axial directions.

Standard diameter:

STD	**Mark "1"**	**87.000 – 87.010 mm (3.4252 – 3.4256 in.)**
	Mark "2"	**87.010 – 87.020 mm (3.4256 – 3.4260 in.)**
	Mark "3"	**87.020 – 87.030 mm (3.4260 – 3.4264 in.)**

Maximum diameter:

STD	**87.23 mm (3.4342 in.)**
O/S 0.50	**87.73 mm (3.4350 in.)**

If the diameter is greater than maximum, rebore all the four cylinders. If necessary, replace the cylinder block.

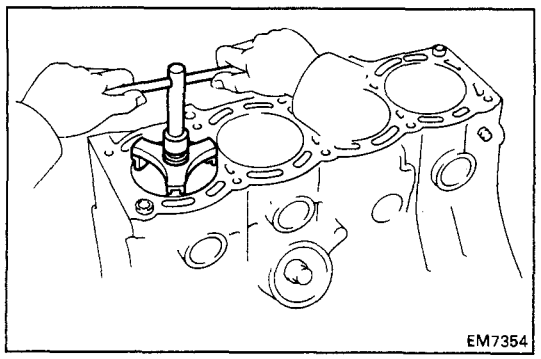

5. REMOVE CYLINDER RIDGE

If the wear is less than 0.2 mm (0.008 in.), using a ridge reamer, grind the top of the cylinder.

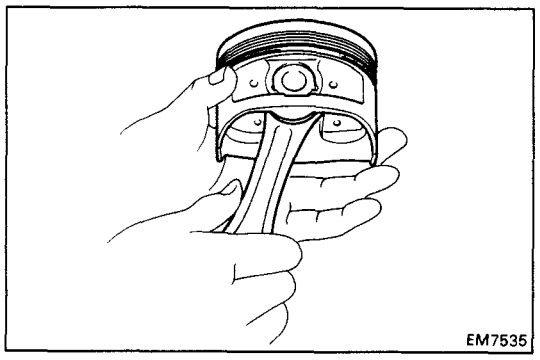

DISASSEMBLY OF PISTON AND CONNECTING ROD ASSEMBLIES

1. CHECK FIT BETWEEN PISTON AND PISTON PIN

Try to move the piston back and forth on the piston pin.

If any movement is felt, replace the piston and pin as a set.

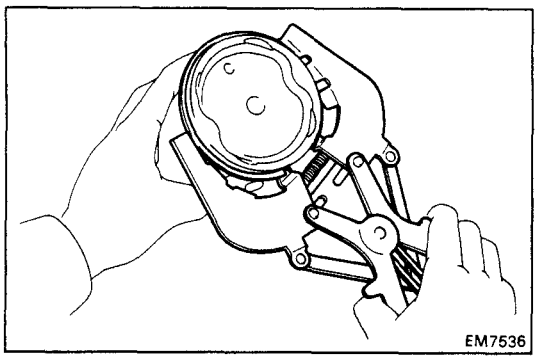

2. REMOVE PISTON RINGS

(a) Using a piston ring expander, remove the two compression rings.

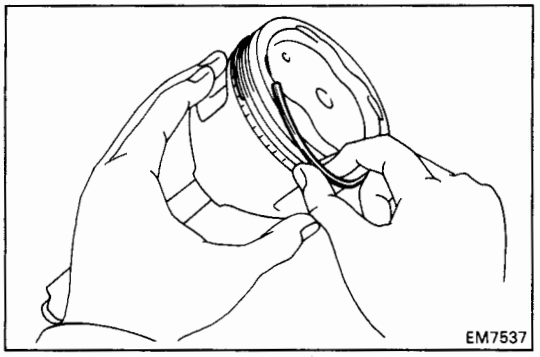

(b) Remove the two side rails and oil ring expander by hand.

HINT: Arrange the rings in correct order only.

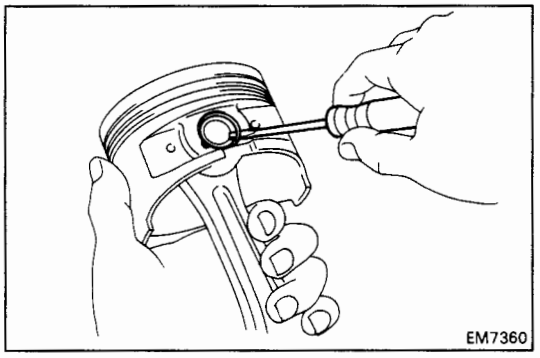

3. DISCONNECT CONNECTING ROD FROM PISTON

(a) Using a small screwdriver, pry out the two snap rings.

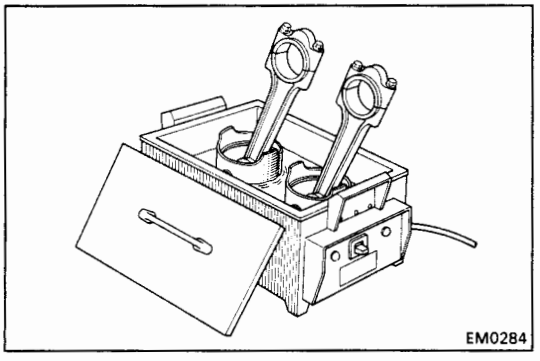

(b) Gradually heat the piston to 80 – 90°C (176 – 194°F).

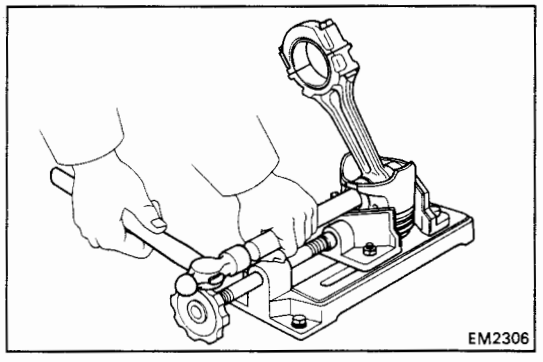

(c) Using plastic-faced hammer and brass bar, lightly tap out the piston pin and remove the connecting rod.

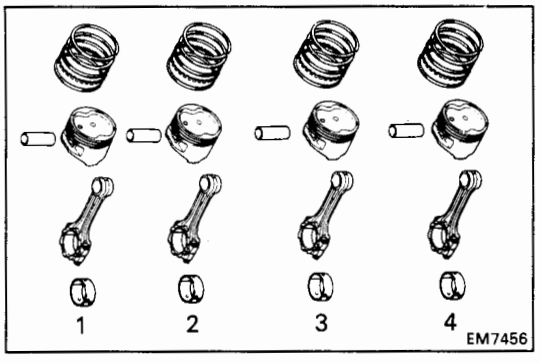

HINT:
- The piston and pin are a matched set.
- Arrange the pistons, pins, rings, connecting rods and bearings in correct order.

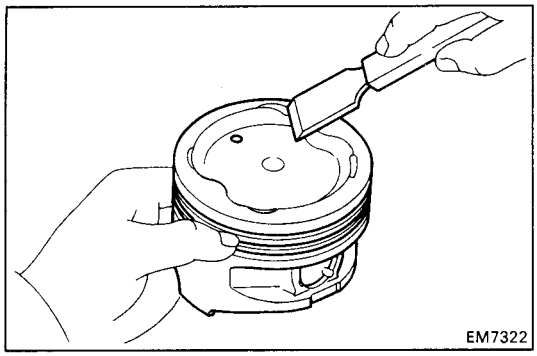

INSPECTION OF PISTON AND CONNECTING ROD ASSEMBLIES

1. CLEAN PISTON

(a) Using a gasket scraper, remove the carbon from the piston top.

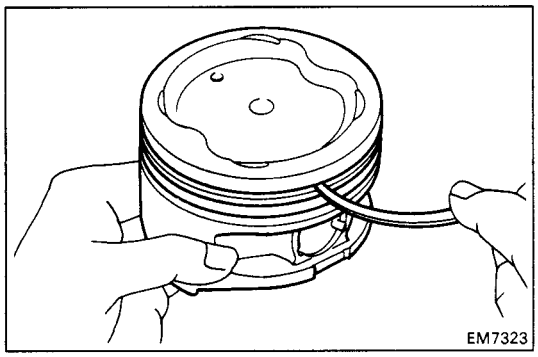

(b) Using a groove cleaner or broken ring, clean the piston ring grooves.

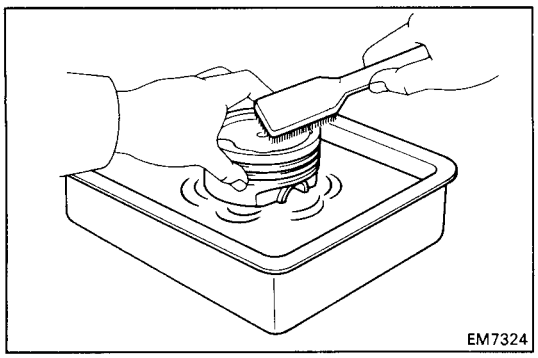

(c) Using solvent and a brush, thoroughly clean the piston.

NOTICE: Do not use a wire brush.

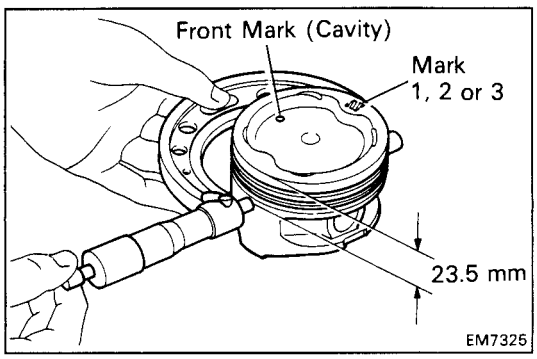

2. INSPECT PISTON

A. Inspect piston oil clearance

HINT: There are three sizes of the standard piston diameter, marked "1", "2" and "3" accordingly. The mark is stamped on the piston top.

(a) Using a micrometer, measure the piston diameter at right angles to the piston pin center line, 23.5 mm (0.925 in.) from the piston head.

Piston diameter:

STD	**Mark "1"**	**86.911 – 86.921 mm (3.4217 – 3.4221 in.)**
	Mark "2"	**86.921 – 86.931 mm (3.4221 – 3.4225 in.)**
	Mark "3"	**86.931 – 86.941 mm (3.4225 – 3.4229 in.)**
O/S 0.50		**87.411 – 87.441 mm (3.4414 – 3.4426 in.)**

(b) Measure the cylinder bore diameter in the thrust directions. (See step 4 on page EM-200)

(c) Subtract the piston diameter measurement from the cylinder bore diameter measurement.

Standard oil clearance: 0.079 – 0.099 mm (0.0031 – 0.0039 in.)

Maximum oil clearance: 0.119 mm (0.0047 in.)

If the oil clearance is greater than maximum, replace all the four pistons and rebore all the four cylinders. If necessary, replace the cylinder block.

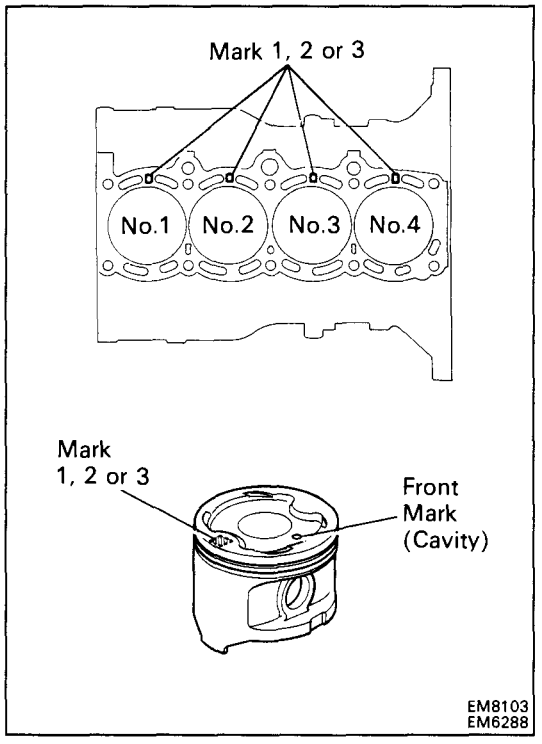

HINT (Use new cylinder block): Use a piston with the same number mark as the cylinder bore diameter marked on the cylinder block.

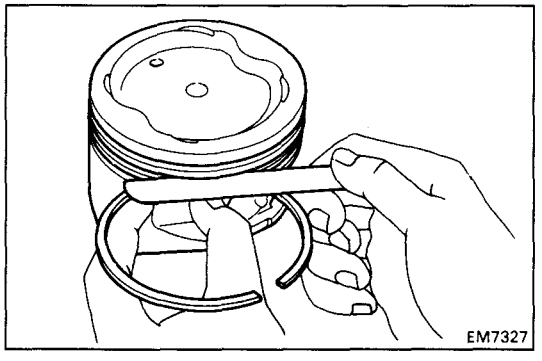

B. Inspect piston ring groove clearance

Using a feeler gauge, measure the clearance between new piston ring and the wall of the piston ring groove.

Ring groove clearance: 0.030 – 0.070 mm (0.0012 – 0.0028 in.)

If the clearance is greater than maximum, replace the piston.

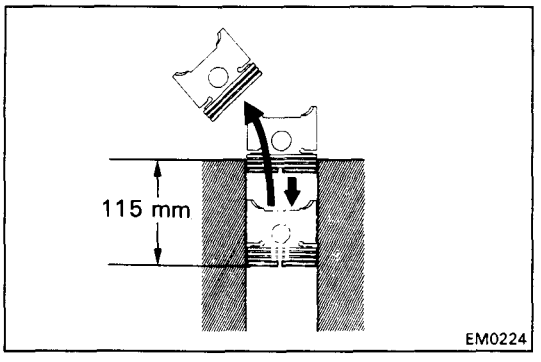

C. Inspect piston ring end gap

(a) Insert the piston ring into the cylinder bore.

(b) Using a piston, push the piston ring a little beyond the bottom of the ring travel, 115 mm (4.53 in.) from the top of the cylinder block.

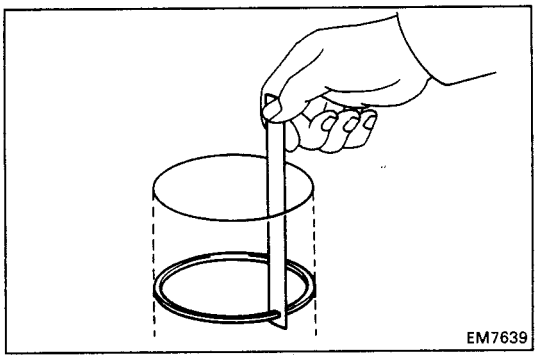

(c) Using a feeler gauge, measure the end gap.

Standard end gap:

No.1	**0.270 – 0.500 mm (0.0106 – 0.0197 in.)**
No.2	**0.350 – 0.600 mm (0.0138 – 0.0234 in.)**
Oil (Side rail)	**0.200 – 0.550 mm (0.0079 – 0.0217 in.)**

Maximum end gap:

No.1	**1.10 mm (0.0433 in.)**
No.2	**1.20 mm (0.0472 in.)**
Oil (Side rail)	**1.15 mm (0.0453 in.)**

If the end gap is greater than maximum, replace the piston ring. If the end gap is greater than maximum, even with a new piston ring, rebore all the four cylinders or replace the cylinder block.

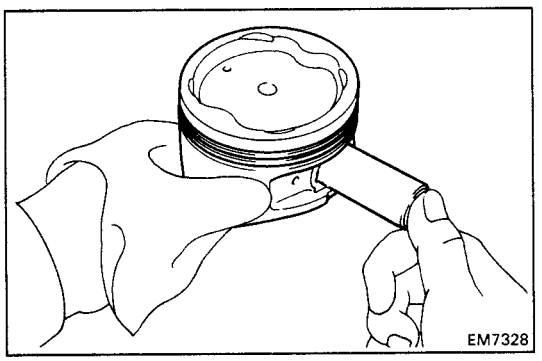

D. Inspect piston pin fit

At 60°C (140°F), you should be able to push the piston pin into the piston pin hole with your thumb.

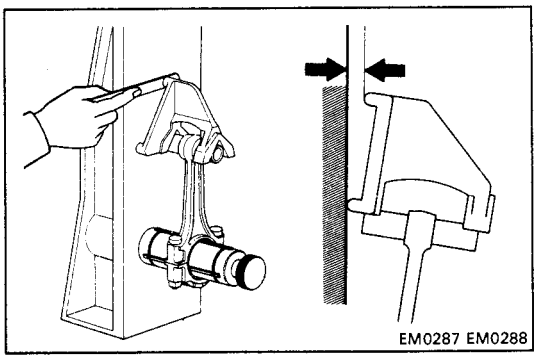

3. INSPECT CONNECTING ROD

A. Inspect connecting rod alignment

Using rod aligner and feeler gauge, check the connecting rod alignment.

- Check for bending.

Maximum bending:

0.05 mm (0.0020 in.) per 100 mm (3.94 in.)

If bend is greater than maximum, replace the connecting rod assembly.

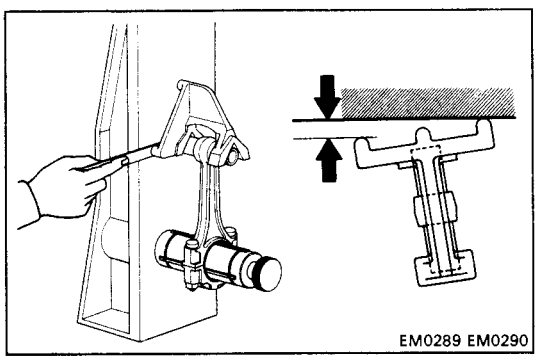

- Check for twist.

Maximum twist:

0.15 mm (0.0059 in.) per 100 mm (3.94 in.)

If twist is greater than maximum, replace the connecting rod assembly.

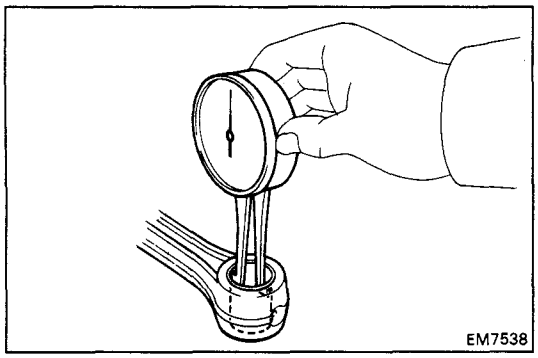

B. Inspect piston pin oil clearance

(a) Using a caliper gauge, measure the inside diameter of the connecting rod bushing.

Bushing inside diameter: 22.005 – 22.017 mm (0.8663 – 0.8668 in.)

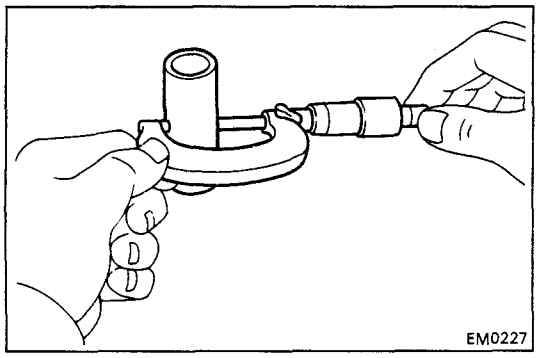

(b) Using a micrometer, measure the piston pin diameter.

Piston pin diameter: 21.997 – 22.009 mm (0.8660 – 0.8665 in.)

(c) Subtract the piston pin diameter measurement from the bushing inside diameter measurement.

Standard oil clearance: 0.005 – 0.011 mm (0.0002 – 0.0004 in.)

Maximum oil clearance: 0.05 mm (0.0020 in.)

If the oil clearance is greater than maximum, replace the bushing. If necessary, replace the piston and piston pin as a set.

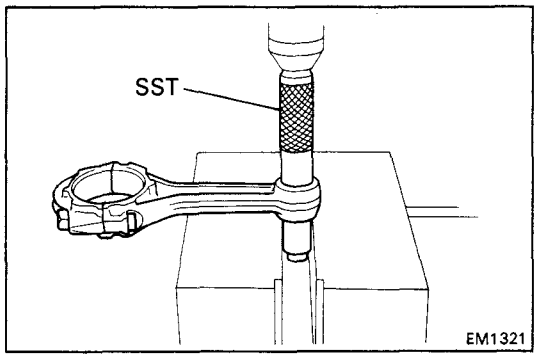

C. If necessary, replace connecting rod bushing

(a) Using SST and a press, press out the bushing.

SST 09222-30010

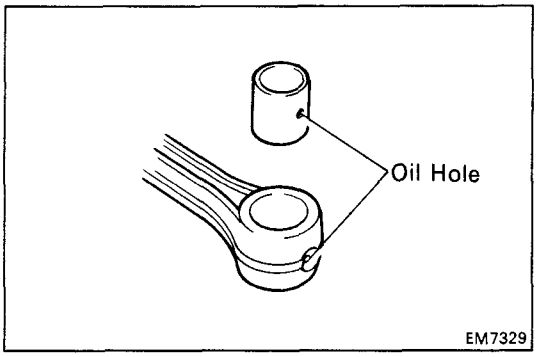

(b) Align the oil holes of a new bushing and the connecting rod.

(c) Using SST and a press, press in the bushing.

SST 09222-30010

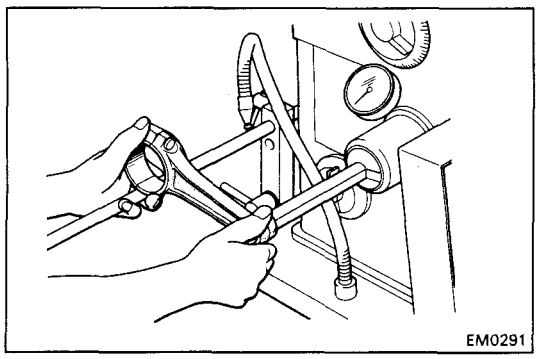

(d) Using a pin hole grinder, hone the bushing to obtain the standard specified clearance (see step B above) between the bushing and piston pin.

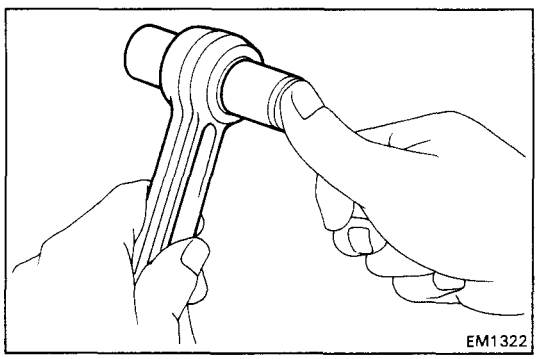

(e) Check the piston pin fit at normal room temperature.

Coat the piston pin with engine oil, and push it into the connecting rod with your thumb.

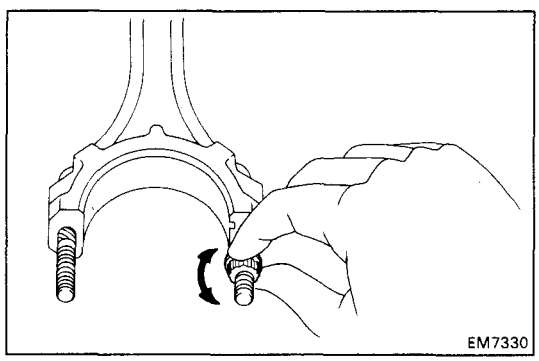

D. Inspect connecting rod bolts

(a) Install the cap nut to the connecting rod bolt. Check that the cap nut can be turned easily by hand to the end of the thread.

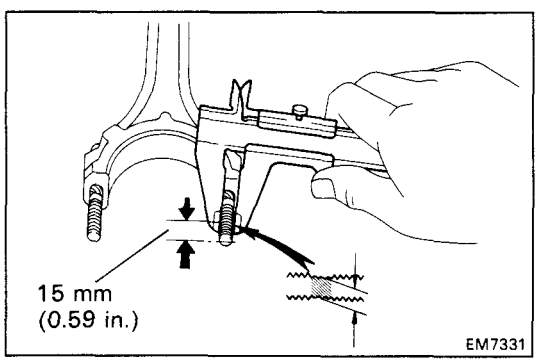

(b) If the cap nut cannot be turned easily, measure the outside diameter of the connecting rod bolt.

Standard diameter: 7.860 – 8.000 mm (0.3094 – 0.3150 in.)

Minimum diameter: 7.60 mm (0.2992 in.)

HINT: If the location of this area cannot be judged by visual inspection, measure the outer diameter at the location shown in the illustration.

If the ouside diameter is less than minimum, replace the connecting rod bolt and cap nut as a set.

BORING OF CYLINDERS

HINT:

- Bore all the four cylinders for the oversized piston outside diameter.
- Replace all the piston rings with ones to match the oversized pistons.

1. KEEP OVERSIZED PISTONS

Oversized piston diameter:
O/S 0.50 87.411 – 87.441 mm
(3.4414 – 3.4426 in.)

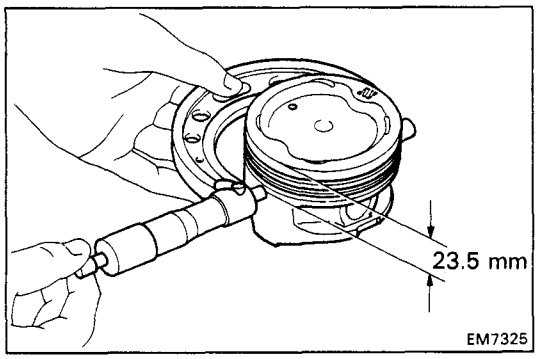

2. CALCULATE AMOUNT TO BORE CYLINDERS

(a) Using a micrometer, measure the piston diameter at right angles to the piston pin center line, 23.5 mm (0.925 in.) from the piston head.

(b) Calculate the amount each cylinder is to be rebored as follows:

Size to be rebored = P + C – H
P = Piston diameter
C = Piston clearance
0.079 – 0.099 mm (0.0031 – 0.0039 in.)
H = Allowance for honing
0.02 mm (0.0008 in.) or less

3. BORE AND HONE CYLINDERS TO CALCULATED DIMENSIONS

Maximum honing: 0.02 mm (0.0008 in.)

NOTICE: Excess honing will destroy the finished roundness.

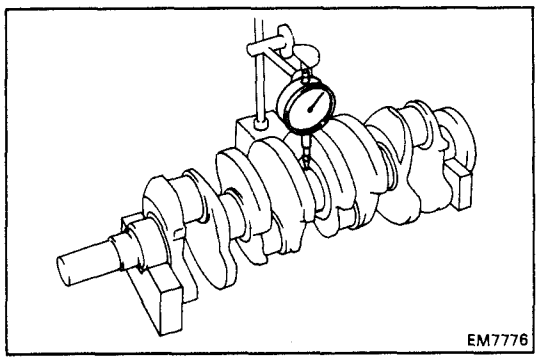

INSPECTION AND REPAIR OF CRANKSHAFT

1. INSPECT CRANKSHAFT FOR RUNOUT

(a) Place the crankshaft on V-blocks.

(b) Using a dial indicator, measure the circle runout at the center journal.

Maximum circle runout: 0.06 mm (0.0024 in.)

If the circle runout is greater than maximum, replace the crankshaft.

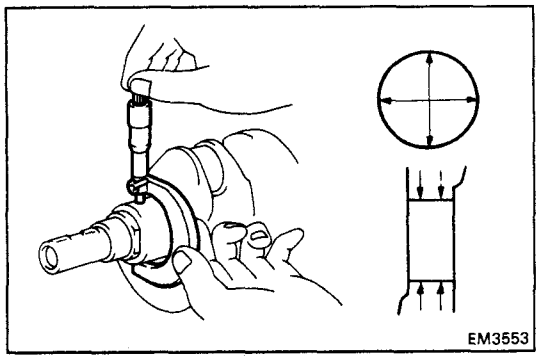

2. INSPECT MAIN JOURNALS AND CRANK PINS

(a) Using a micrometer, measure the diameter of each main journal and crank pin.

Main journal diameter:

STD size	**54.988 – 55.003 mm (2.1653 – 2.1655 in.)**
U/S 0.25	**54.745 – 54.755 mm (2.1553 – 2.1557 in.)**

Crank pin diameter:

STD size	**51.985 – 52.000 mm (2.0466 – 2.0472 in.)**
U/S 0.25	**51.745 – 51.755 mm (2.0372 – 2.0376 in.)**

If the diameter is not as specified, check the oil clearance (See pages EM-193 to 197). If necessary, grind or replace the crankshaft.

(b) Check each main journal and crank pin for taper and out-of-round as shown.

Maximum taper and out-of-round: 0.02 mm (0.0008 in.)

If the taper and out-of-round is greater than maximum, replace the crankshaft.

3. IF NECESSARY, GRIND AND HONE MAIN JOURNALS AND/OR CRANK PINS

Grind and hone the main journals and/or crank pins to the finished undersized diameter (See procedure step 2).

Install new main journal and/or crank pin undersized bearings.

REPLACEMENT OF CRANKSHAFT OIL SEALS

(See pages EM-160 and 161)

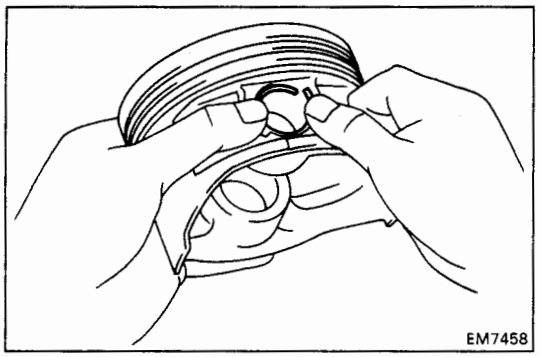

ASSEMBLY OF PISTON AND CONNECTING ROD ASSEMBLIES

1. ASSEMBLE PISTON AND CONNECTING ROD

(a) Install a new snap ring on one side of the piston pin hole.

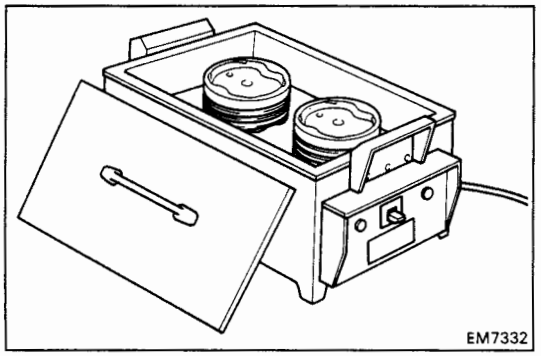

(b) Gradually heat the piston to 80 – 90°C (176 – 194°F).

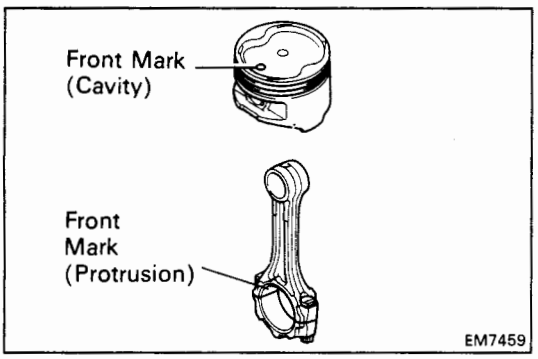

(c) Coat the piston pin with engine oil.

(d) Align the front marks of the piston and connecting rod, and push in the piston pin with your thumb.

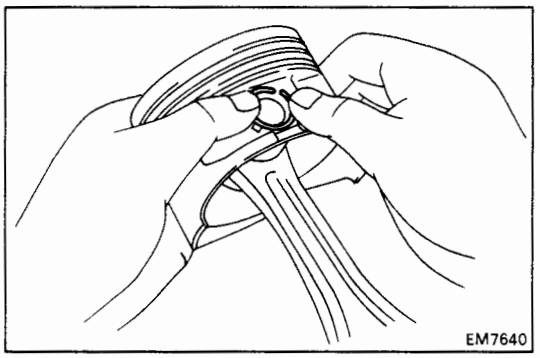

(e) Install a new snap ring on the other side of the piston pin hole.

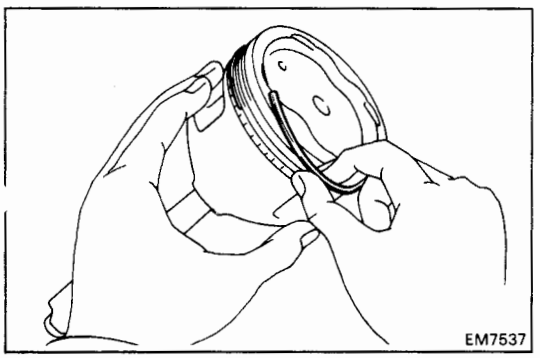

2. INSTALL PISTON RINGS

(a) Install the oil ring expander and two side rails by hand.

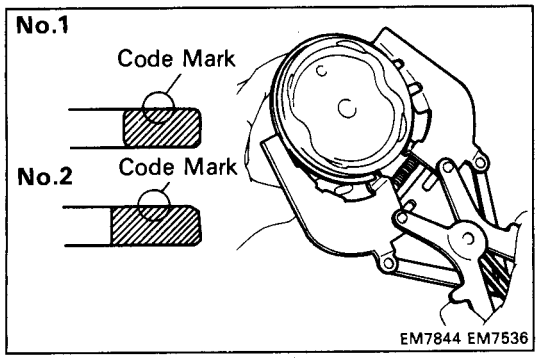

(b) Using a piston ring expander, install the two compression rings with the code mark facing upward.

Code mark: No.1 1N or T
No.2 2N or 2T

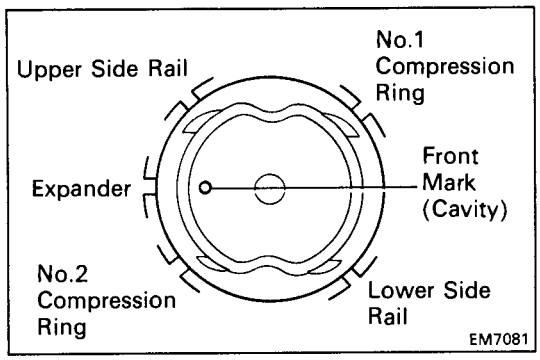

(c) Position the piston rings so that the ring ends are as shown.

NOTICE: Do not align the ring ends.

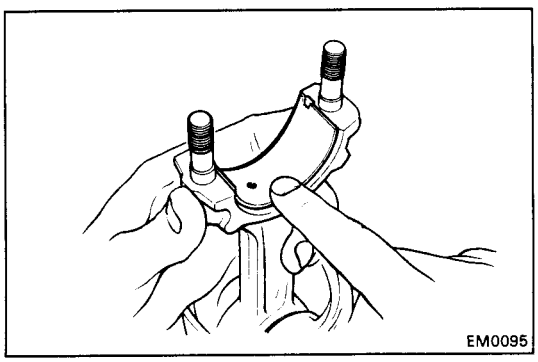

3. INSTALL BEARINGS

(a) Align the bearing claw with the groove of the connecting rod or connecting cap.

(b) Install the bearings in the connecting rod and connecting rod cap.

ASSEMBLY OF CYLINDER BLOCK

(See page EM-181)

HINT:
- Thoroughly clean all parts to be assembled.
- Before installing the parts, apply new engine oil to all sliding and rotating surfaces.
- Replace all gaskets, O-rings and oil seals with new parts.

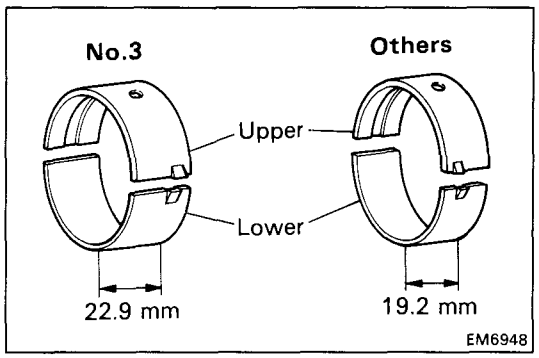

1. INSTALL MAIN BEARINGS

HINT:
- Main bearings come in widths of 19.2 mm (0.756 in.) and 22.9 mm (0.902 in.). Install the 22.9 mm (0.902 in.) bearings in the No.3 cylinder block journal position with the main bearing cap. Install the 19.2 mm (0.756 in.) bearings in the other positions.
- Upper bearings have an oil groove and oil holes; lower bearings do not.

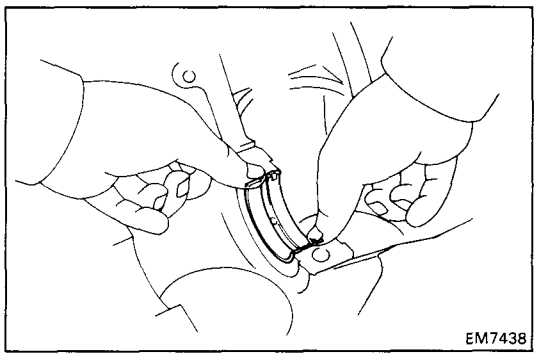

(a) Align the bearing claw with the claw groove of the cylinder block, and push in the five upper bearings.

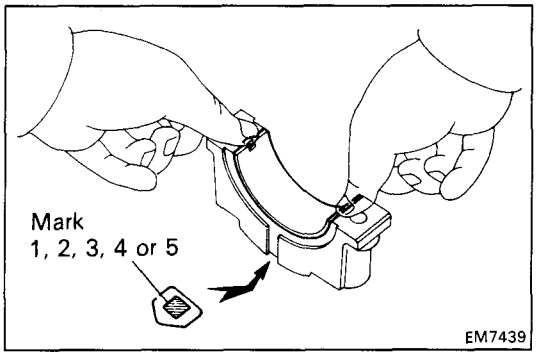

(b) Align the bearing claw with the claw groove of the main bearing cap, and push in the five lower bearings.

HINT: A number is marked on each main bearing cap to indicate the installation position.

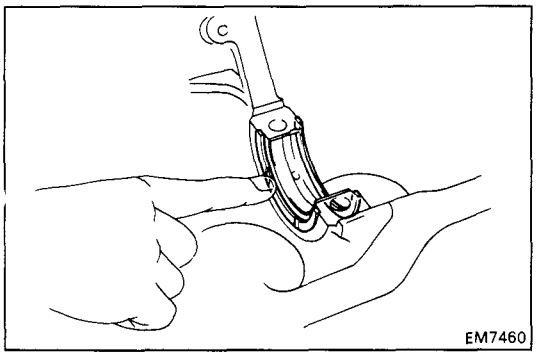

2. INSTALL UPPER THRUST WASHERS

Install the two thrust washers under the No.3 journal position of the cylinder block with the oil grooves facing outward.

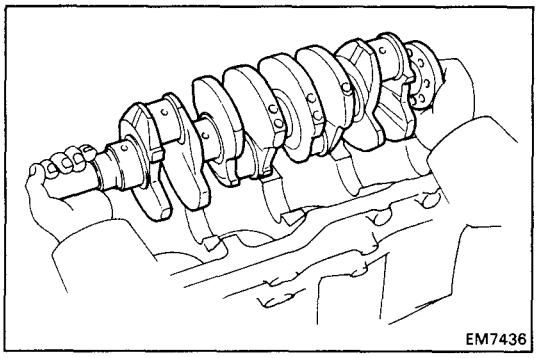

3. PLACE CRANKSHAFT ON CYLINDER BLOCK

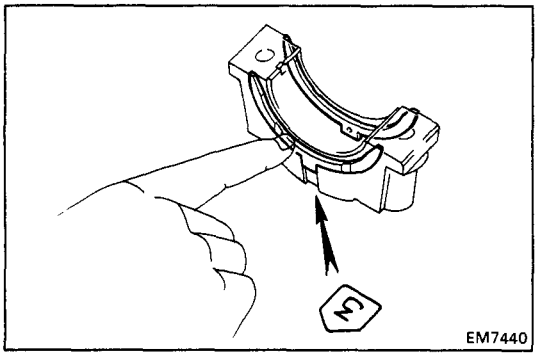

4. INSTALL MAIN BEARING CAPS AND LOWER THRUST WASHERS

(a) Install the two thrust washers on the No.3 bearing cap with the grooves facing outward.

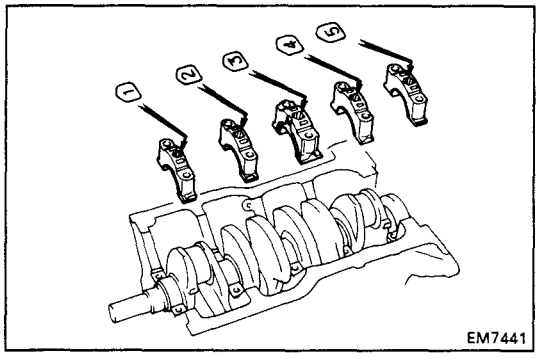

(b) Install the five main bearing caps in their proper locations.

HINT: Each bearing cap has a number and front mark.

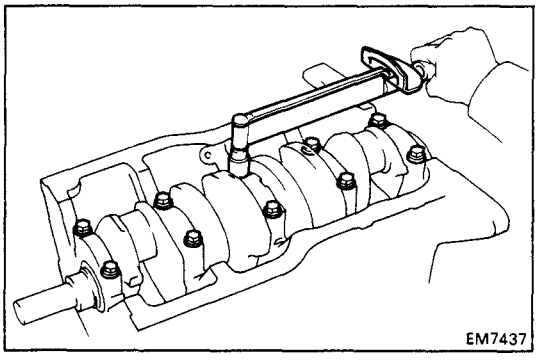

(c) Apply a light coat of engine oil on the threads and under the heads of the main bearing caps.

(d) Install and uniformly tighten the ten bolts of the main bearing caps in several passes in the sequence shown.

Torque: 600 kg-cm (43 ft-lb, 59 N·m)

(e) Check that the crankshaft turns smoothly.

(f) Check the crankshaft thrust clearance.
(See step 5 on page EM-195)

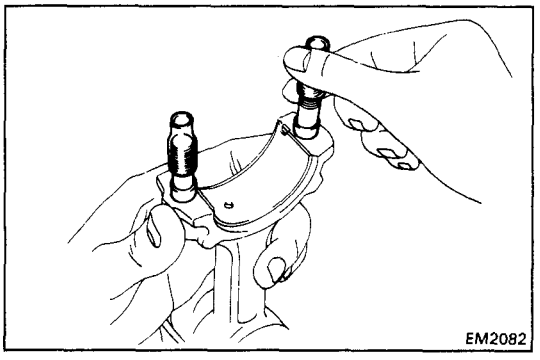

5. INSTALL PISTON AND CONNECTING ROD ASSEMBLIES

(a) Cover the connecting rod bolts with a short piece of hose to protect the crankshaft from damage.

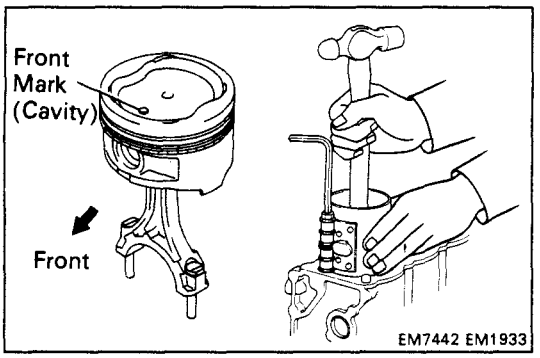

(b) Using a piston ring compressor, push the correctly numbered piston and connecting rod assemblies into each cylinder with the front mark of the piston facing forward.

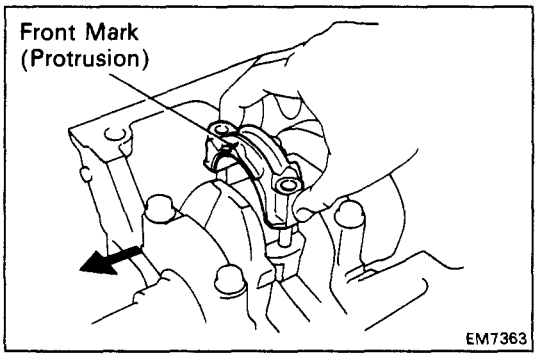

6. INSTALL CONNECTING ROD CAPS

A. Place connecting rod cap on connecting rod

(a) Match the numbered connecting rod cap with the connecting rod.

(b) Install the connecting rod cap with the front mark facing forward.

B. Install connecting rod cap nuts

HINT:

- The cap nuts are tightened in two progressive steps (steps (b) and (d)).
- If any the connecting rod bolt is broken or deformed, replace it.

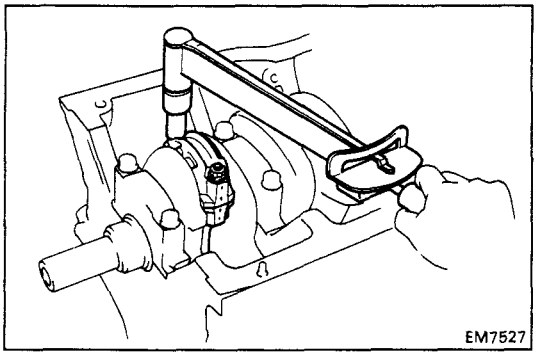

(a) Apply a light coat of engine oil on the threads and under the cap nuts.

(b) Using SST, install and alternately tighten the cap nuts in several passes.

SST 09011-38121

Torque: 250 kg-cm (18 ft-lb, 25 N·m)

If any one of the cap nuts does not meet the torque specification, replace the connecting rod bolt and cap nut as a set.

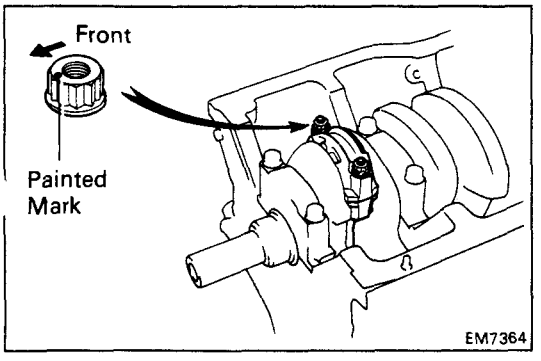

(c) Mark the front of the cap nut with the paint.

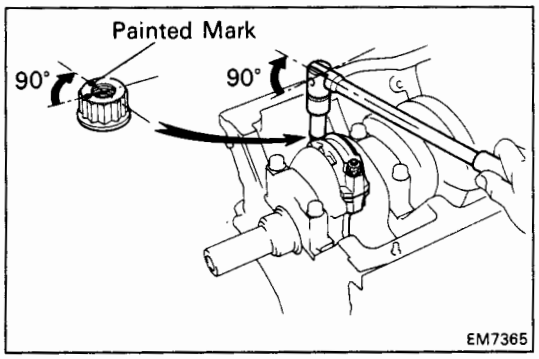

(d) Retighten the cap nuts 90° in the numerical order shown.

(e) Check that the painted mark is now at a 90° angle to the front.

(f) Check that the crankshaft turns smoothly.

(g) Check the connecting rod thrust clearance. (See step 2 on page EM-193)

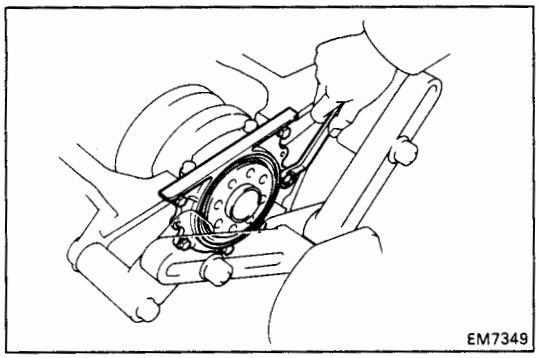

7. **INSTALL REAR OIL SEAL RETAINER**

Install a new gasket and the retainer with the six bolts.

Torque: 95 kg-cm (82 in.-lb, 9.3 N·m)

POST ASSEMBLY

1. **INSTALL OIL COOLER (See page LU-25)**
2. **INSTALL OIL FILTER (See page LU-7)**
3. **INSTALL OIL PUMP AND OIL PAN (See pages LU-15 and 16)**
4. **INSTALL WATER PUMP (See pages CO-12 and 13)**
5. **INSTALL CYLINDER HEAD (See pages EM-121 to 131)**
6. **INSTALL PULLEYS AND TIMING BELT (See pages EM-55 to 59)**

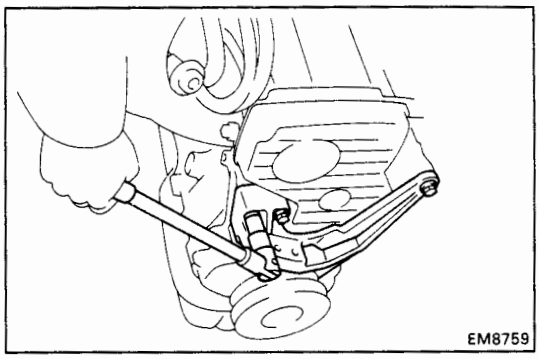

7. **INSTALL RH ENGINE MOUNTING BRACKET**

Install the mounting bracket with the four bolts.

Torque: 620 kg-cm (45 ft-lb, 61 N·m)

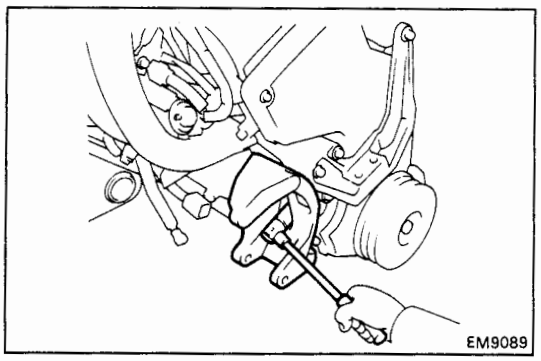

8. **INSTALL ALTERNATOR BRACKET**

Install the alternator bracket with the five bolts.

Torque: 440 kg-cm (32 ft-lb, 43 N·m)

9. **INSTALL ALTERNATOR (See page CH-17)**
10. **REMOVE ENGINE STAND**

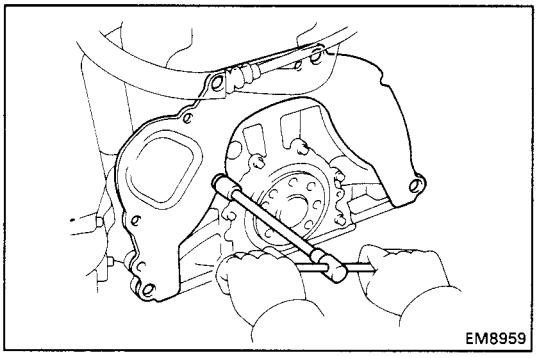

11. INSTALL REAR END PLATE

Torque: 95 kg-cm (82 ft-lb, 9.3 N·m)

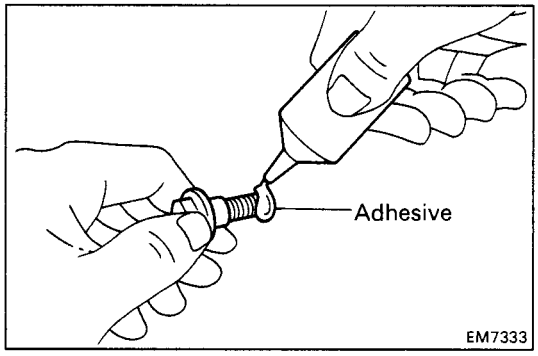

12. (M/T)
INSTALL FLYWHEEL

(a) Apply adhesive to two or three threads of the mount bolt end.

Adhesive: Part No. 08833-00070, THREE BOND 1324 or equivalent

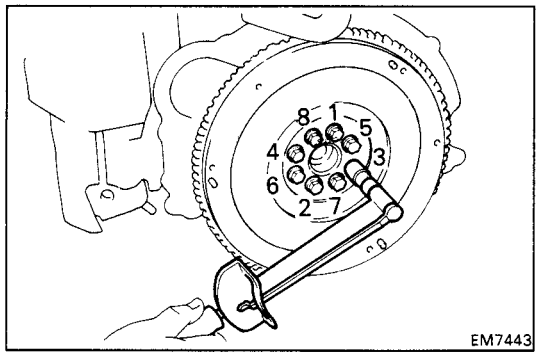

(b) Install the flywheel on the crankshaft.

(c) Install and uniformly tighten the mount bolts in several passes in the sequence shown.

Torque: 900 kg-cm (65 ft-lb, 88 N·m)

13. (A/T)
INSTALL DRIVE PLATE (See procedure step 12)

Torque: 850 kg-cm (61 ft-lb, 83 N·m)

14. (M/T)
INSTALL CLUTCH DISC AND COVER (See page CL-10)

INSTALLATION OF ENGINE

1. **ASSEMBLE ENGINE AND TRANSAXLE**
   M/T (See pages MT-5 and 6)
   A/T (See page AT-41)

2. **INSTALL STARTER (See page ST-17)**

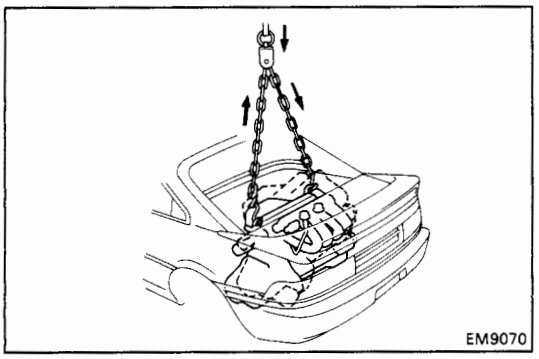

3. **INSTALL ENGINE AND TRANSAXLE ASSEMBLY IN VEHICLE**
   (a) Attach the engine chain hoist to the engine hangers.
   (b) Slowly lower the engine into the engine compartment.
   Tilt the transaxle downward, lower the engine and clear the LH body mounting.

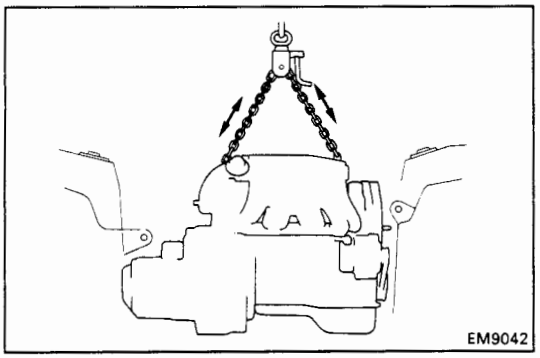

   (c) Keep the engine level, and align RH and LH mountings with the body mountings.

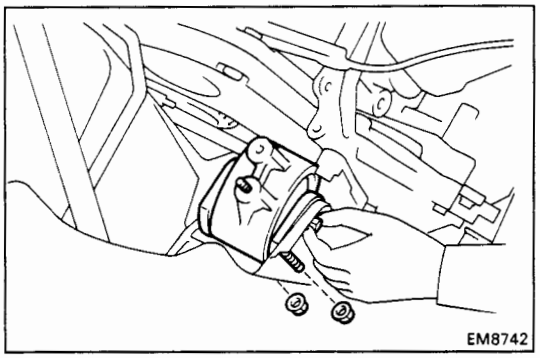

   (d) Attach the RH mounting insulator to the body, and temporarily install the through bolt.
   (e) Attach the RH mounting insulator to the mounting bracket, and temporarily install the two nuts.

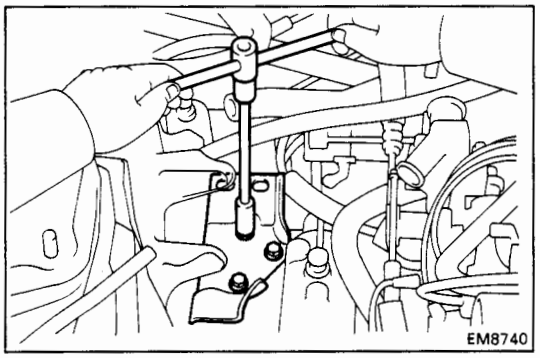

   (f) (M/T)
   Install the LH mounting bracket to the transaxle case with the three bolts.

   Torque: 530 kg-cm (38 ft-lb, 52 N·m)

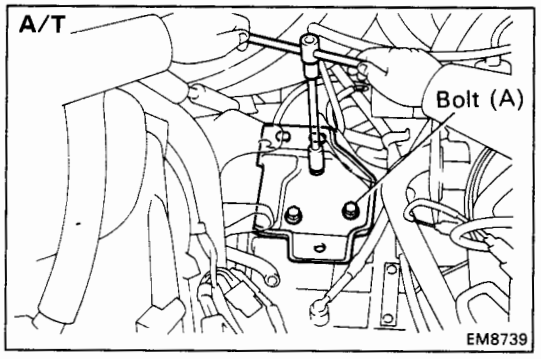

(g) (A/T)
Install the LH mounting bracket to the transaxle case with the three bolts. Do not tighten the bolt (A).

Torque: 530 kg-cm (38 ft-lb, 52 N·m)

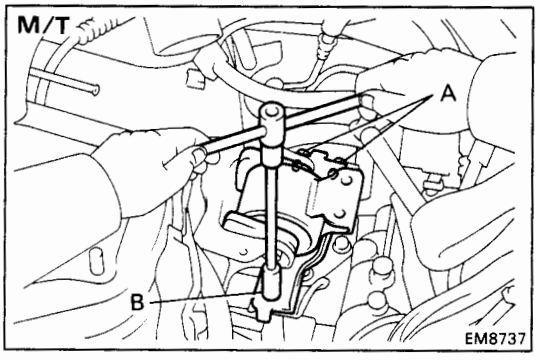

(h) Attach the LH mounting insulator to the body, and temporarily install the through bolt.

(i) Attach the LH mounting insulator to the mounting bracket, and install the three (M/T) or four (A/T) bolts.

Torque:
A 650 kg-cm (47 ft-lb, 63 N·m)
B 740 kg-cm (54 ft-lb, 73 N·m)
C 530 kg-cm (38 ft-lb, 52 N·m) A/T only

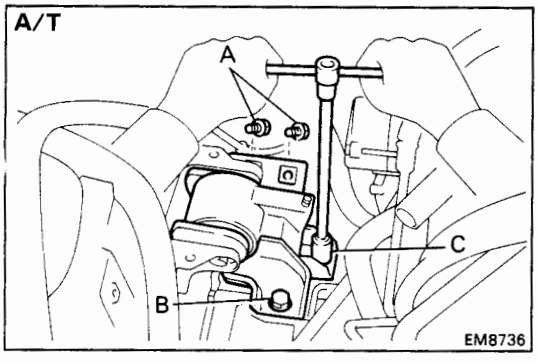

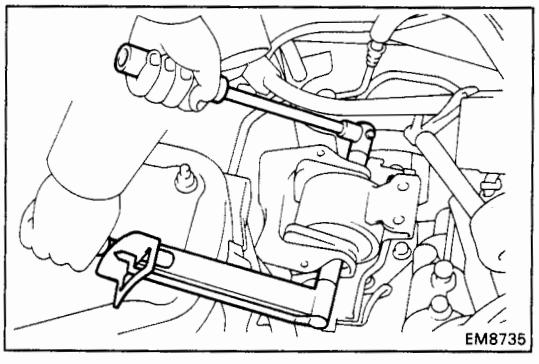

(j) Tighten the through bolt holding the LH mounting insulator to the body.

Torque: 800 kg-cm (58 ft-lb, 78 N·m)

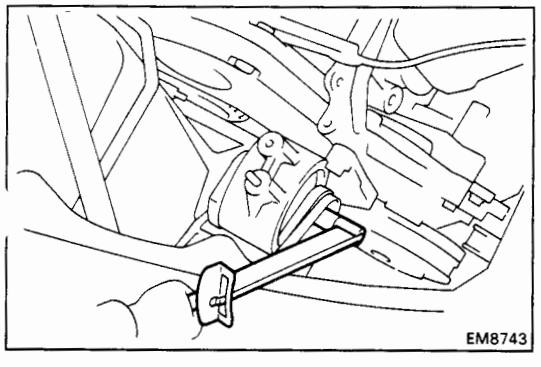

(k) Tighten the two nuts holding the RH mounting insulator to the mounting bracket.

Torque: 530 kg-cm (38 ft-lb, 52 N·m)

(l) Tighten the through bolt holding the RH mounting insulator to the body.

Torque: 800 kg-cm (58 ft-lb, 78 N·m)

(m) Remove the engine chain hoist from the engine.

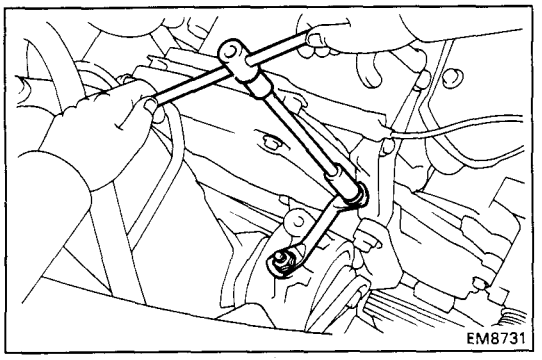

4. INSTALL RH ENGINE MOUNTING STAY

Install the mounting stay with the two bolts and nut.

Torque: 740 kg-cm (54 ft-lb, 73 N·m)

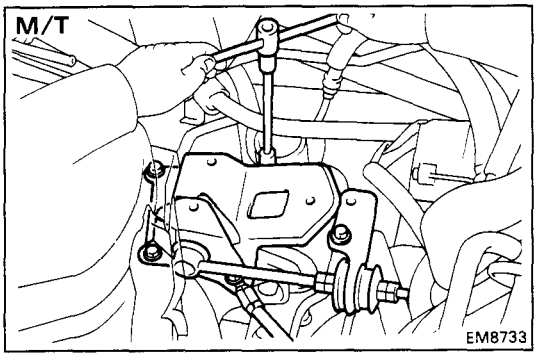

5. INSTALL LATERAL CONTROL ROD (M/T) AND AIR CLEANER CASE BRACKET

(M/T)

Install the control rod, case bracket and charcoal canister tube with the five bolts, and connect the ground strap (from transaxle). Do not the tighten the bolt (A).

Torque: 360 kg-cm (26 ft-lb, 35 N·m)

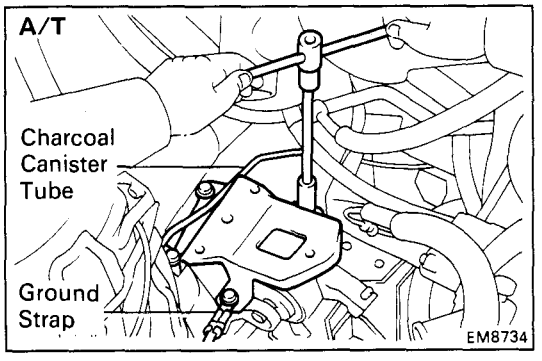

(A/T)

Install the case bracket and charcoal canister tube with the four bolts, and connect the ground strap (from transaxle). Do not the tighten the bolt (A).

Torque: 360 kg-cm (26 ft-lb, 35 N·m)

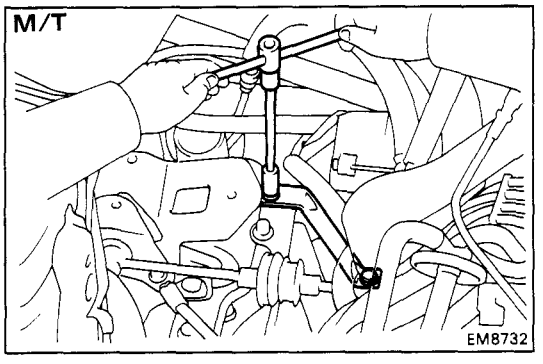

6. (M/T)
INSTALL LH ENGINE MOUNTING STAY

(a) Install the mounting stay and speedometer cable clamp with the two bolts.

Torque:
Transaxle side 250 kg-cm (18 ft-lb, 25 N·m)
Mounting insulator side 740 kg-cm (54 ft-lb, 73 N·m)

(b) Tighten the bolt (A) of step 6.

Torque: 380 kg-cm (27 ft-lb, 37 N·m)

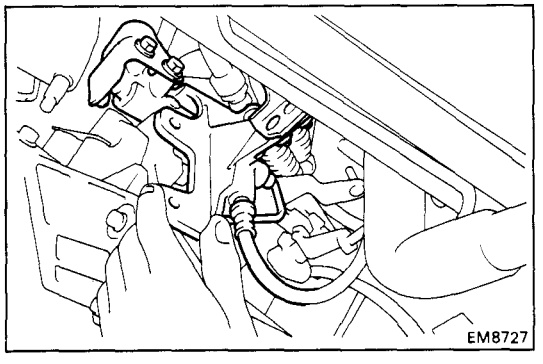

7. INSTALL CLUTCH RELEASE CYLINDER (M/T), TRANSAXLE CONTROL BRACKET (A/T) AND FRONT ENGINE MOUNTING BRACKET

(a) (M/T)
Place the release cylinder on the transaxle.

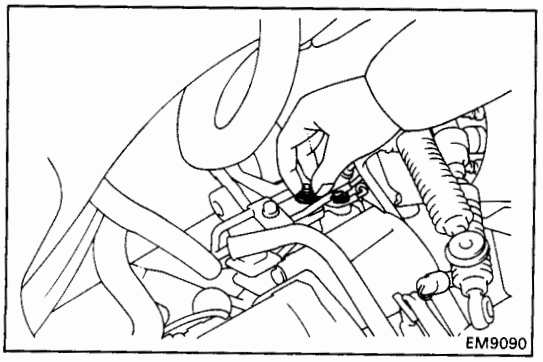

(b) (M/T)
Temporarily install the bolt and nut holding the release cylinder to the transaxle.

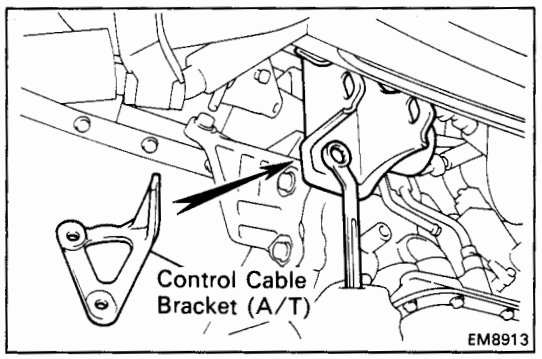

(c) Install the control cable bracket (A/T) and mounting bracket with the two bolts.

Torque: 790 kg-cm (57 ft-lb, 77 N·m)

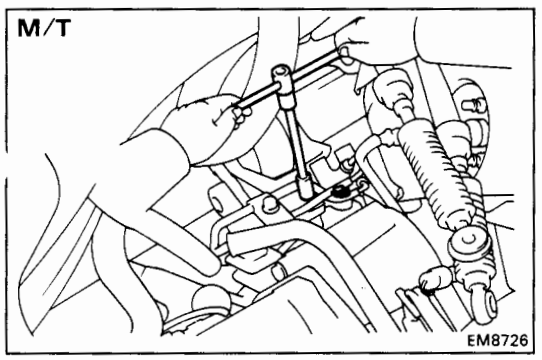

(d) (M/T)
Tighten the bolt and nut holding the clutch release cylinder to the tranaxle.

Torque: 120 kg-cm (9 ft-lb, 12 N·m)

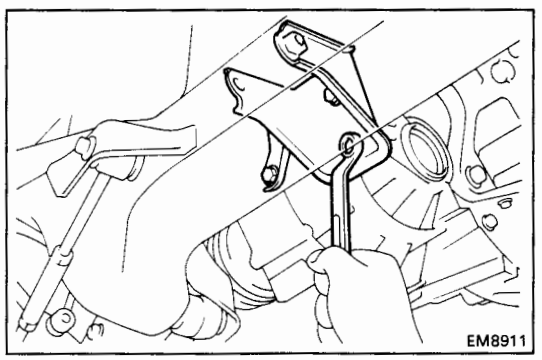

8. INSTALL REAR ENGINE MOUNTING BRACKET

Install the mounting bracket with the three bolts.

Torque: 790 kg-cm (57 ft-lb, 77 N·m)

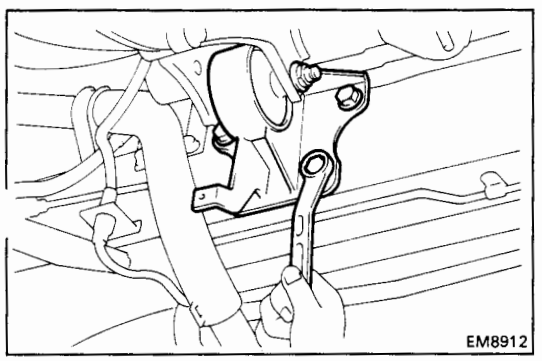

9. INSTALL FRONT ENGINE MOUNTING INSULATOR

(a) Install the mounting insulator to the body with the four bolts.

Torque: 740 kg-cm (54 ft-lb, 73 N·m)

(b) Temporarily install the through bolt and nut holding the mounting insulator to the mounting bracket.

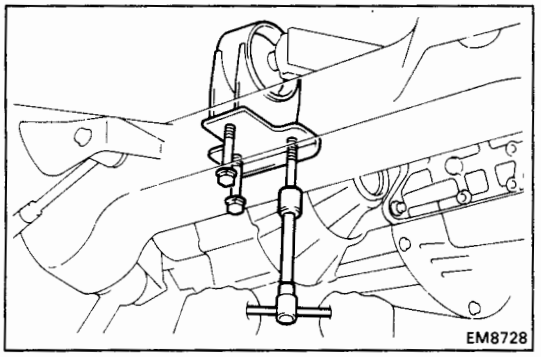

10. INSTALL REAR ENGINE MOUNTING INSULATOR

(a) Temporarily install the mounting bracket to the body with the three bolts.

(b) Temporarily install the through bolt holding the mounting insulator to the mounting bracket.

(c) Tighten the three bolts holding the mounting bracket to the body.

Torque: 650 kg-cm (47 ft-lb, 64 N·m)

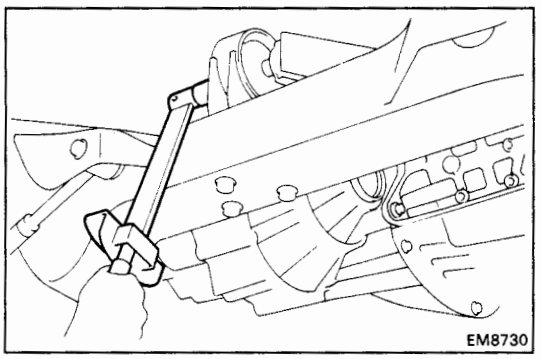

(d) Tighten the through bolt holding the mounting insulator to the mounting bracket.

Torque: 800 kg-cm (58 ft-lb, 79 N·m)

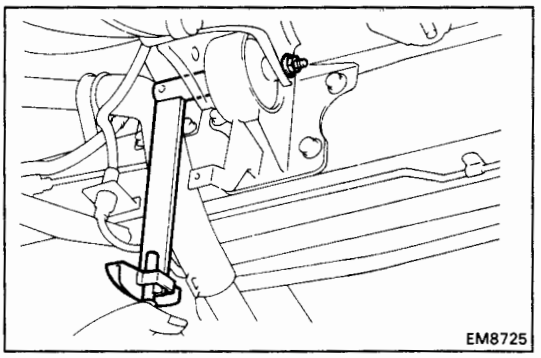

11. TIGHTEN FRONT ENGINE MOUNTING THROUGH BOLT

Torque: 800 kg-cm (58 ft-lb, 79 N·m)

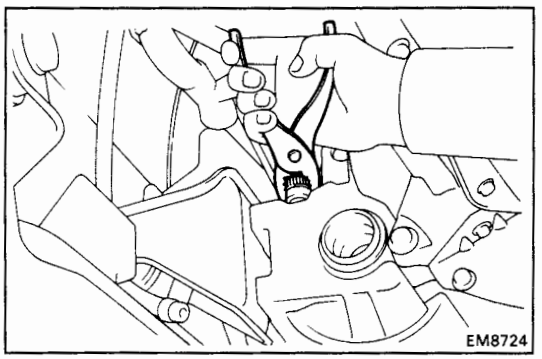

12. CONNECT SPEEDOMETER CABLE

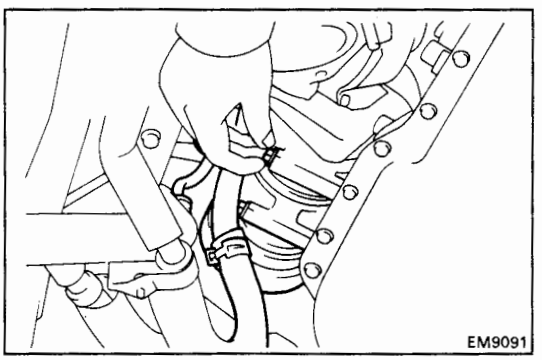

13. INSTALL A/C COMPRESSOR AND IDLER PULLEY BRACKET

(a) Temporarily install the compressor with the two bolts.

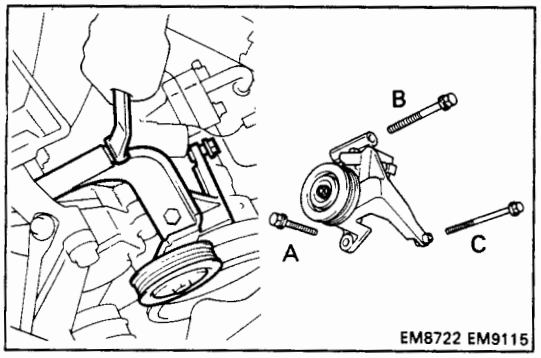

(b) Install the idler pulley and bracket with the three bolts.

Torque:
A 275 kg-cm (20 ft-lb, 27 N·m)
B 375 kg-cm (27 ft-lb, 37 N·m)
C 250 kg-cm (18 ft-lb, 25 N·m)

(c) Install the wire clamp of the A/C compressor with the bolt.

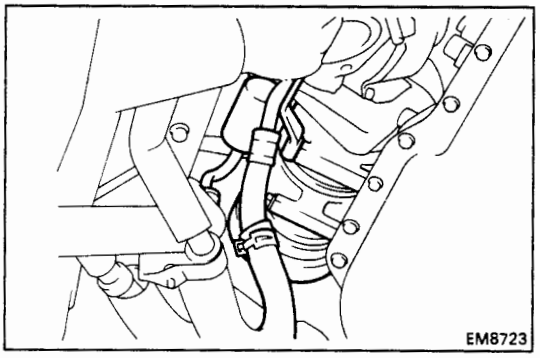

(d) Tighten the two bolts of the lower side holding the A/C compressor to the cylinder block.

Torque: 280 kg-cm (20 ft-lb, 27 N·m)

(e) Connect the A/C compressor connector.

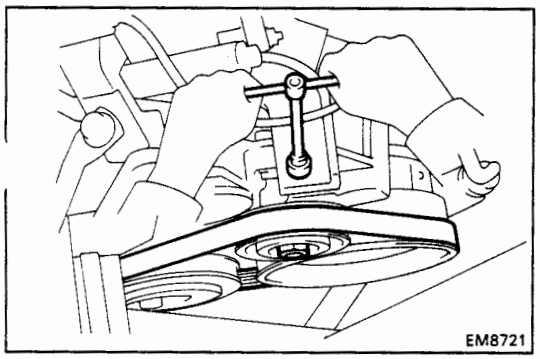

(f) Install the drive belt with the idler pulley bolt and adjusting bolt.

14. INSTALL DRIVE SHAFTS (See pages SA-49 to 51)

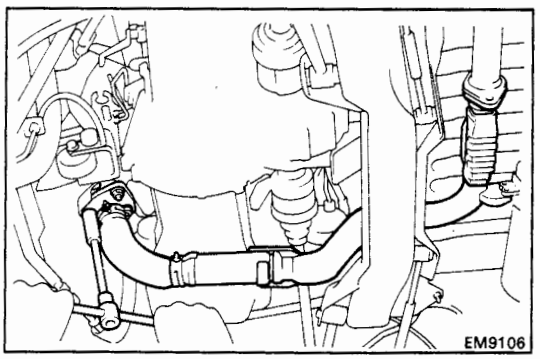

15. INSTALL FRONT EXHAUST PIPE

(a) Place a new gasket on the front of the front exhaust pipe.

(b) Using a 14 mm deep socket wrench, install the three new nuts holding the exhaust pipe to the catalytic converter.

Torque: 630 kg-cm (46 ft-lb, 62 N·m)

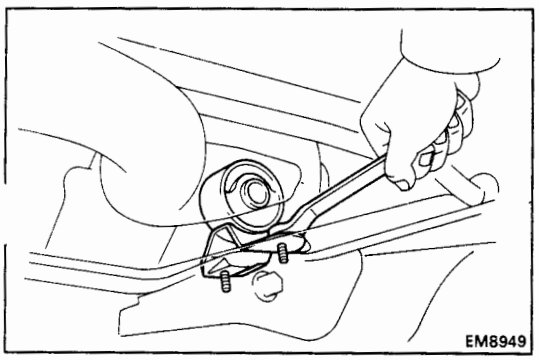

(c) Install the support bracket with the two bolts.

Torque: 210 kg-cm (15 ft-lb, 21 N·m)

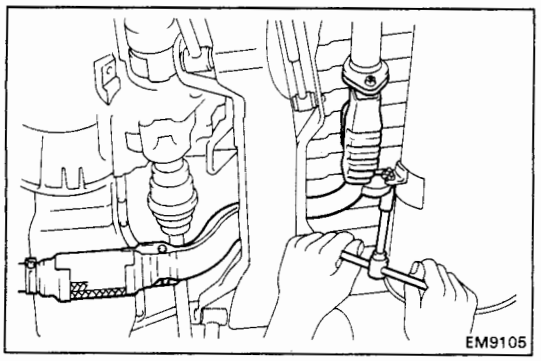

(d) Place a new gasket on the rear of the front exhaust pipe.

(e) Temporarily install the two bolts holding the front exhaust pipe to the tailpipe.

(f) Install the two bolts holding the stopper bracket of the front exhaust pipe to the tailpipe stopper bracket.

Torque: 190 kg-cm (190 ft-lb, 19 N·m)

(g) Tighten the two bolts holding the front exhaust pipe to the tailpipe.

Torque: 440 kg-cm (32 ft-lb, 43 N·m)

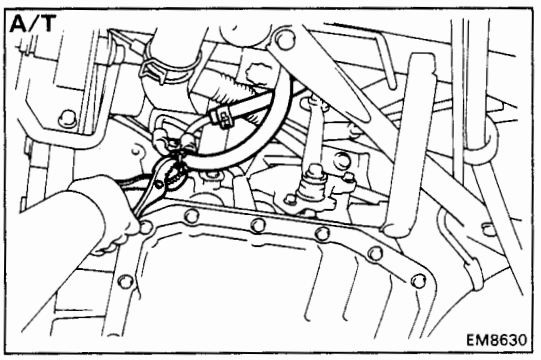

16. (A/T)
CONNECT TRANSAXLE OIL COOLER HOSES

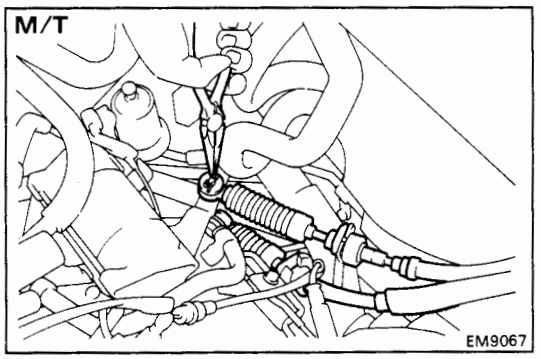

17. CONNECT TRANSAXLE CONTROL CABLE(S)

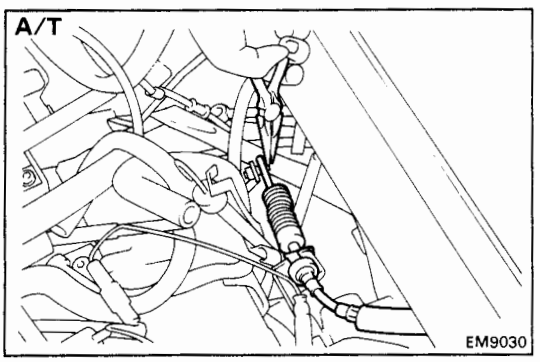

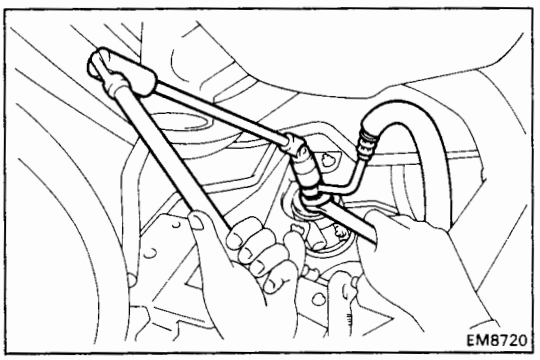

18. CONNECT FUEL INLET HOSE TO FUEL FILTER

Torque: 300 kg-cm (22 ft-lb, 29 N·m)

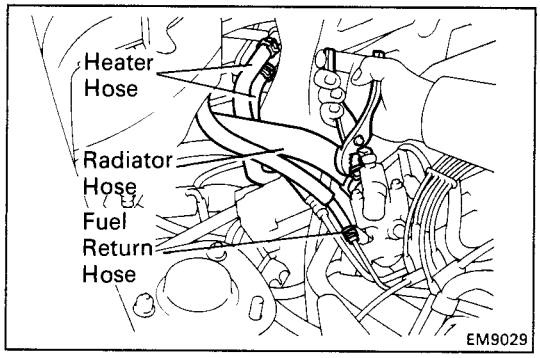

19. CONNECT FUEL RETURN HOSE

20. CONNECT RADIATOR HOSE TO WATER OUTLET

21. CONNECT HEATER HOSES

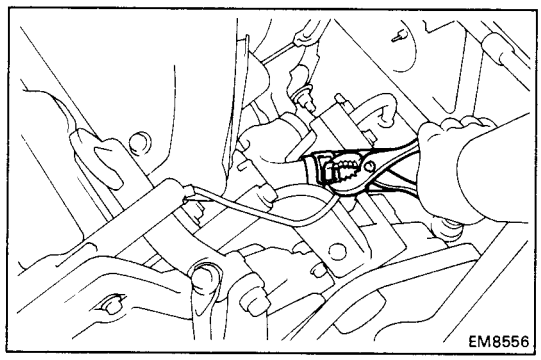

22. CONNECT RADIATOR HOSE TO WATER INLET

23. CONNECT STARTER CABLE

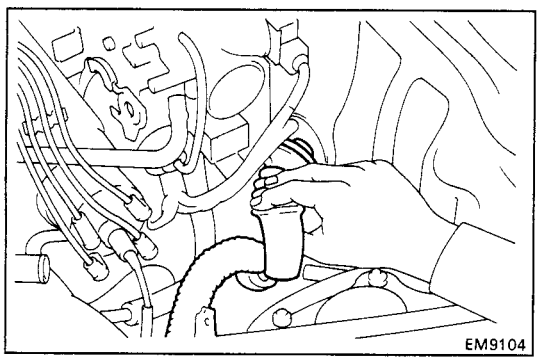

24. CONNECT ENGINE WIRE TO LUGGAGE COMPARTMENT

(a) Push in the engine wire through the luggage compartment.

(b) Connect the following connectors.

(1) Two engine ECU connectors

(2) Starter relay connector

(3) Engine compartment wire connector

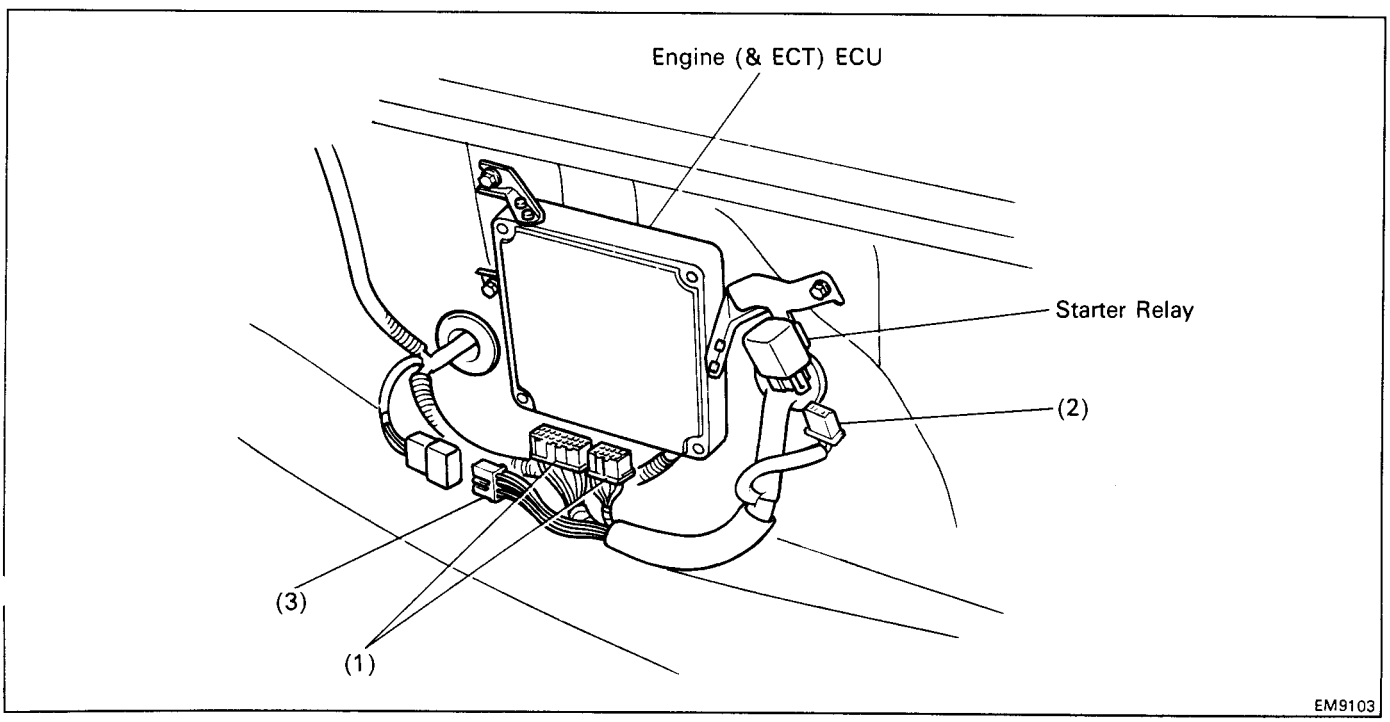

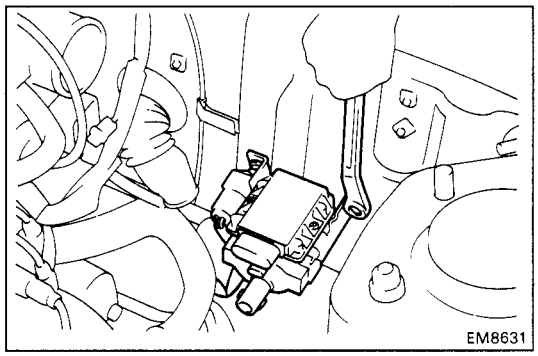

25. INSTALL IGNITION COIL AND IGNITER

(a) Install the ignition coil and igniter with the two bolts. Connect the noise filter.

(b) Connect the high-tension cord.

(c) Connect the igniter connector.

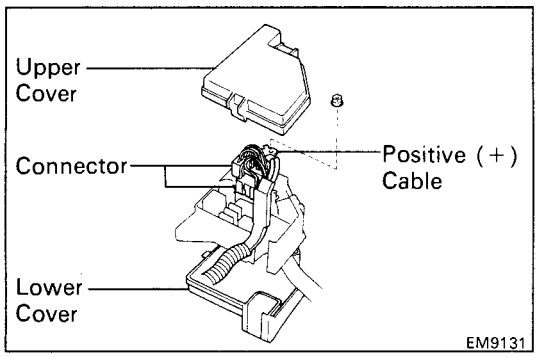

26. CONNECT ENGINE WIRE, AND INSTALL ENGINE RELAY BOX

(a) Connect the two connectors and positive (+) cable of the engine wire to the relay box.

(b) Install the upper and lower covers to the relay box.

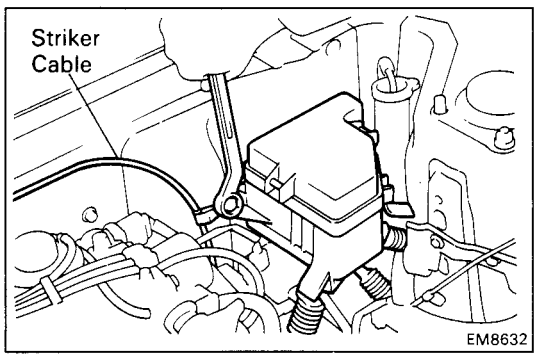

(c) Install the relay box with the two bolts. Install the luggage compartment striker cable.

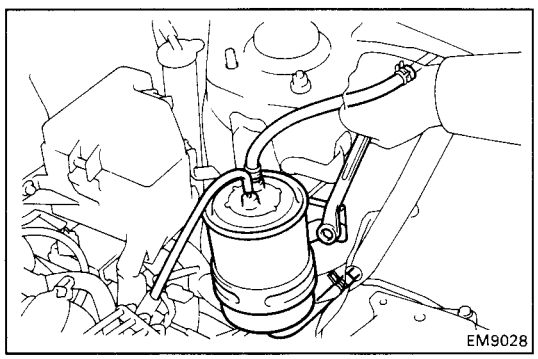

27. INSTALL CHARCOAL CANISTER

(a) Install the charcoal canister with the two bolts.

(b) Connect the three hoses.

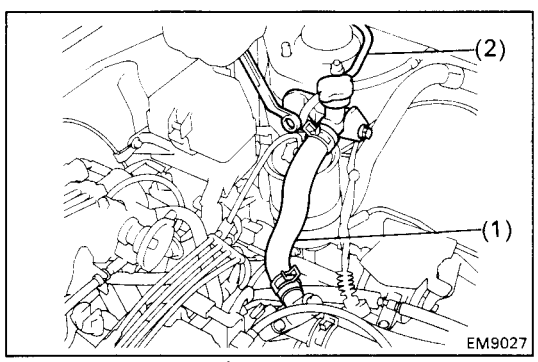

28. INSTALL WATER FILLER

(a) Install the water filler with the two bolts.

(b) Connect the following hoses:

(1) Water filler hose

(2) Coolant reservoir hose

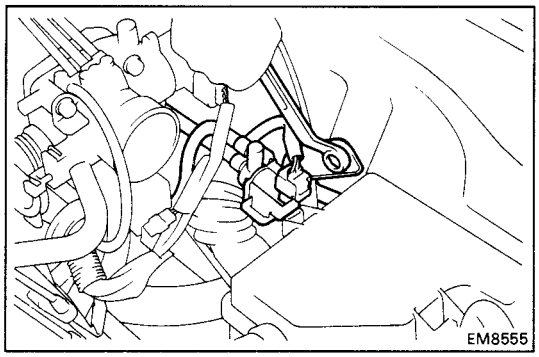

29. INSTALL A/C VSV

(a) Install the A/C VSV with the bolt.

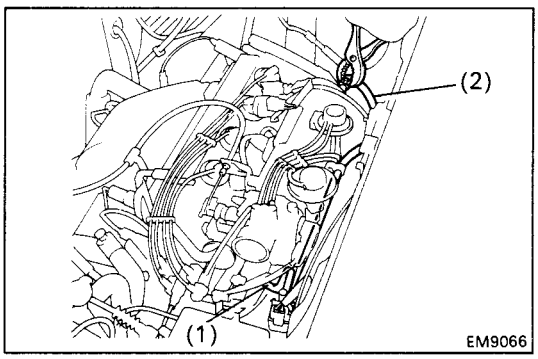

(b) Connect the following hoses:
  (1) Air hose from ISC valve
  (2) Vacuum hose from intake manifold

(c) Connect the VSV connector.

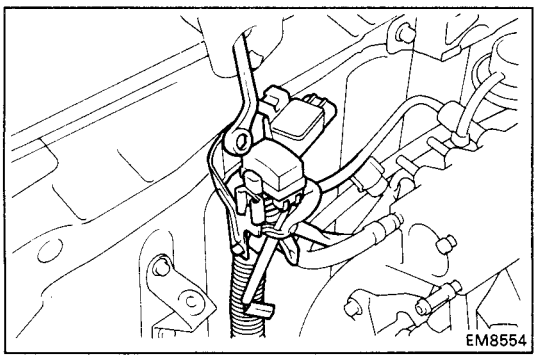

30. INSTALL CHECK CONNECTOR AND VACUUM SENSOR

Install the check connector and vacuum sensor with the bolt.

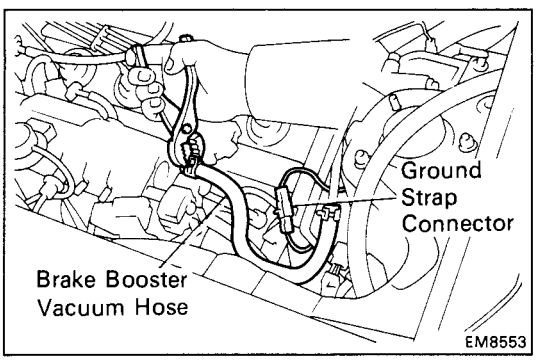

31. CONNECT BRAKE BOOSTER VACUUM HOSE

32. CONNECT GROUND STRAP CONNECTOR

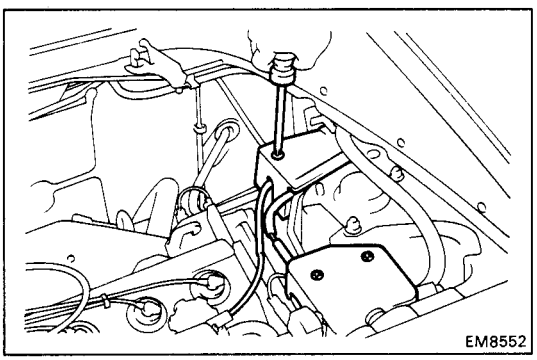

33. INSTALL CRUISE CONTROL ACTUATOR (w/ CRUISE CONTROL SYSTEM) AND ACCELERATOR LINKAGE

(a) Connect the cable to the accelerator linkage.

(b) Install the accelerator linkage with the three bolts.

(c) Connect the actuator connector.

(d) Install the actuator with the three bolts.

(e) Install the accelerator linkage cover with the screw.

(f) Install the actuator cover with the two screws.

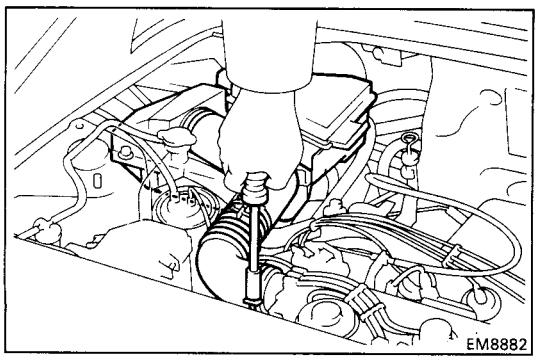

34. INSTALL ACCELERATOR CABLE, AND ADJUST IT

35. INSTALL AIR CLEANER ASSEMBLY

(a) Install the air cleaner case with the three bolts.

(b) Install the air cleaner element.

(c) Connect the air cleaner hose to the throttle body.

(d) Install the air cleaner cap.

(e) Connect the intake air temperature sensor connector.

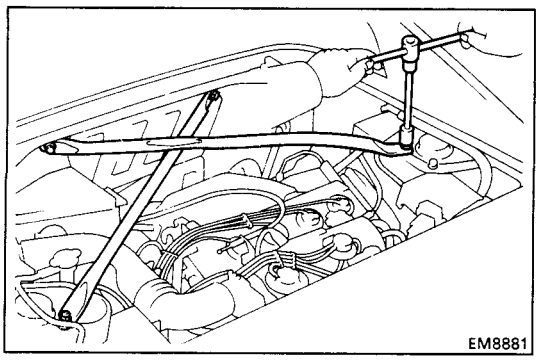

36. INSTALL SUSPENSION UPPER BRACE

Install the suspension upper brace with the two bolts and two nuts.

Torque: Bolt 740 kg-cm (54 ft-lb, 73 N·m)
Nut 650 kg-cm (47 ft-lb, 64 N·m)

37. CONNECT CABLE TO NEGATIVE TERMINAL OF BATTERY

38. FILL WITH ENGINE COOLANT (See page CO-7)

Capacity (w/ Heater):
13.0 liters (13.7 US qts, 11.4 Imp. qts)

39. FILL WITH ENGINE OIL (See page LU-8)

Capacity:
Drain and refill
w/ Oil filter change
4.2 liters (4.4 US qts, 3.7 Imp. qts)
w/o Oil filter change
3.8 liters (4.0 US qts, 3.3 Imp. qts)
Dry fill 4.6 liters (4.9 US qts, 4.0 Imp. qts)

40. START ENGINE AND CHECK FOR LEAKS

41. PERFORM ENGINE ADJUSTMENT

(a) Adjust the alternator drive belt.
(See page CH-3)

Drive belt tension: New belt 120 ± 20 lb
Used belt 104 ± 20 lb

(b) Adjust the A/C drive belt.

Drive belt tension: New belt 160 ± 20 lb
Used belt 100 ± 20 lb

(c) Adjust the ignition timing.
(See steps 9 to 13 on pages IG-21 and 22)

Ignition timing:
10° BTDC @ idle
(w/ Terminals TE1 and E1 connected)

42. **INSTALL ENGINE UNDER COVERS**

43. **INSTALL ENGINE HOOD**

44. **INSTALL ENGINE COMPARTMENT SIDE PANELS**

45. **PERFORM ROAD TEST**

    Check for abnormal noise, shock, slippage, correct shift points and smooth operation.

46. **RECHECK ENGINE COOLANT AND OIL LEVELS**

EXHAUST SYSTEM

Page

EXHAUST PIPES AND HEAT INSULATORS EX-2

EXHAUST PIPES AND HEAT INSULATORS

COMPONENTS

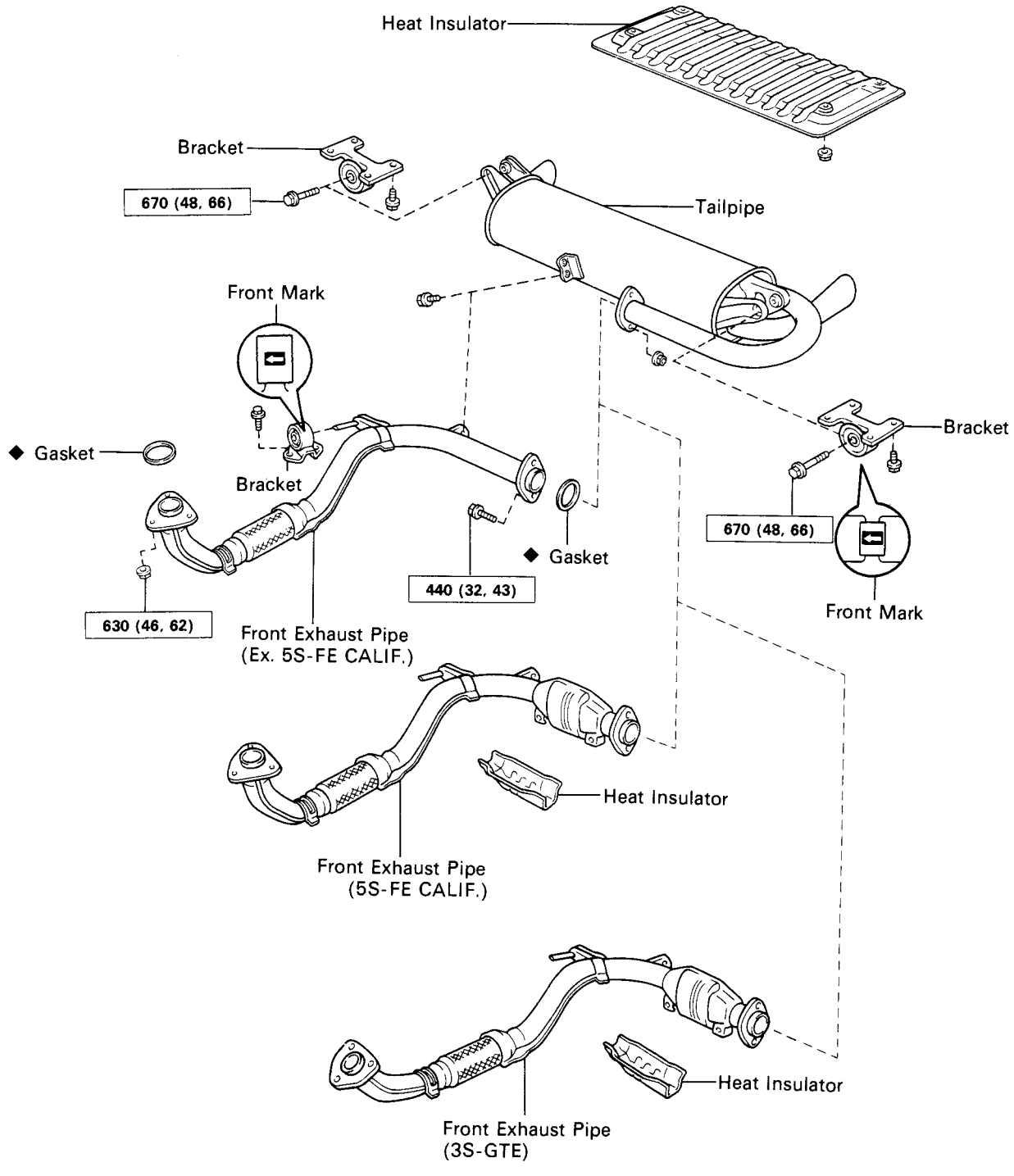

kg-cm (ft-lb, N·m) : Specified torque

◆ Non-reusable part

EX0028

TURBOCHARGER

	Page
DESCRIPTION	TC-2
PRECAUTIONS	TC-4
TROUBLESHOOTING	TC-5
TURBOCHARGER	TC-7
INTERCOOLER	TC-20

DISCRIPTION

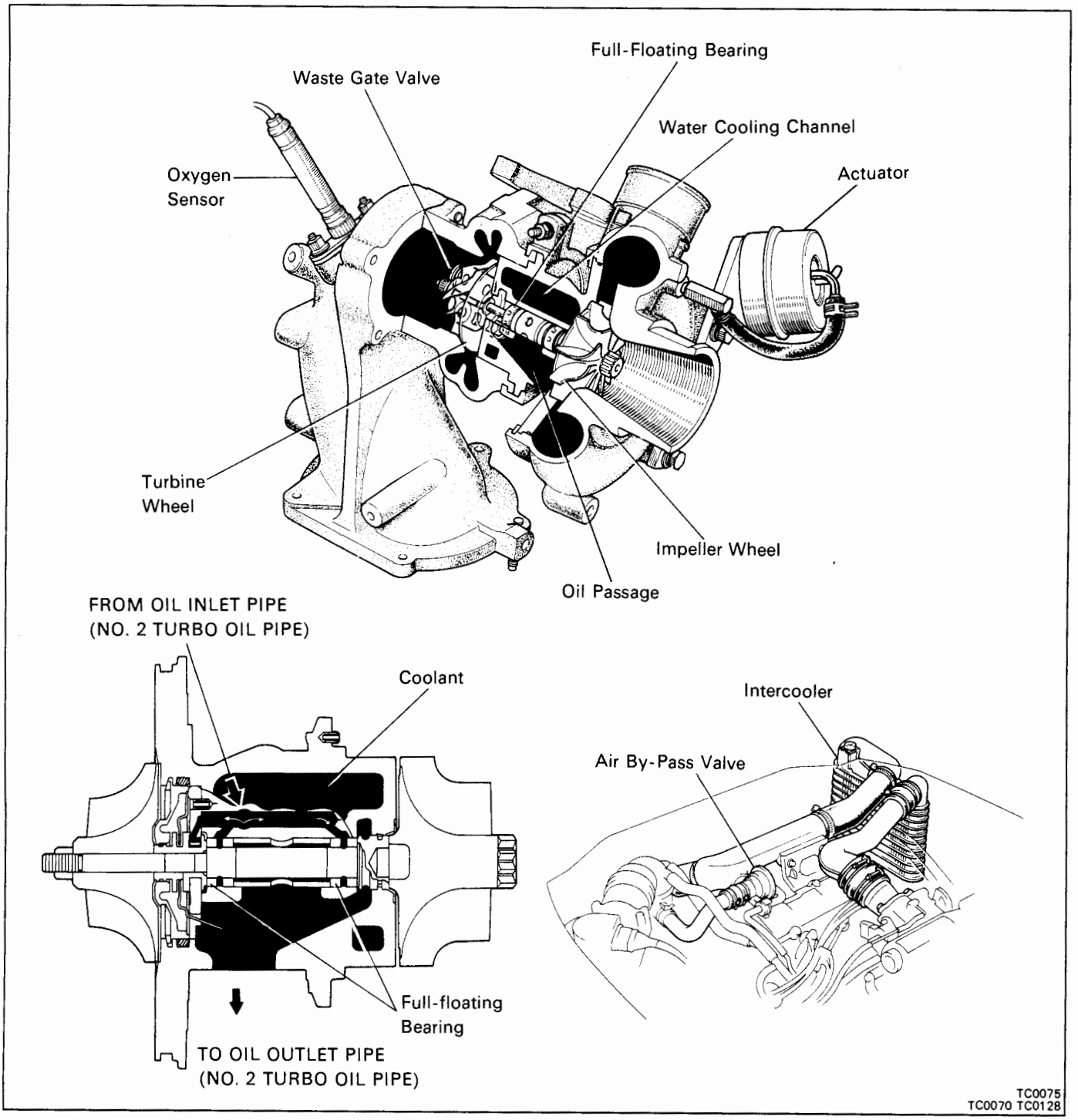

Systems which increase the amount of air sent to the engine are either turbocharger type (using exhaust gas to turn the turbine) or supercharger type (using the engine crankshaft, etc. to mechanically turn the pump, etc.). For MR2 3S-GTE engine, the turbocharger type has been adopted.

The turbocharger is a device which increases engine output by sending a greater amount of air-fuel mixture to the engine than under normal conditions.

Engine output depends upon the volume of the air-fuel mixture ignited per unit of time. Therefore, to increase engine output, the most effective method is to send a greater amount of air-fuel mixture into the cylinder.

In other words, by installing a special turbocharger and providing a higher air-fuel mixture than usual, engine output can be increased by increasing the average combustion pressure without increasing the engine speed.

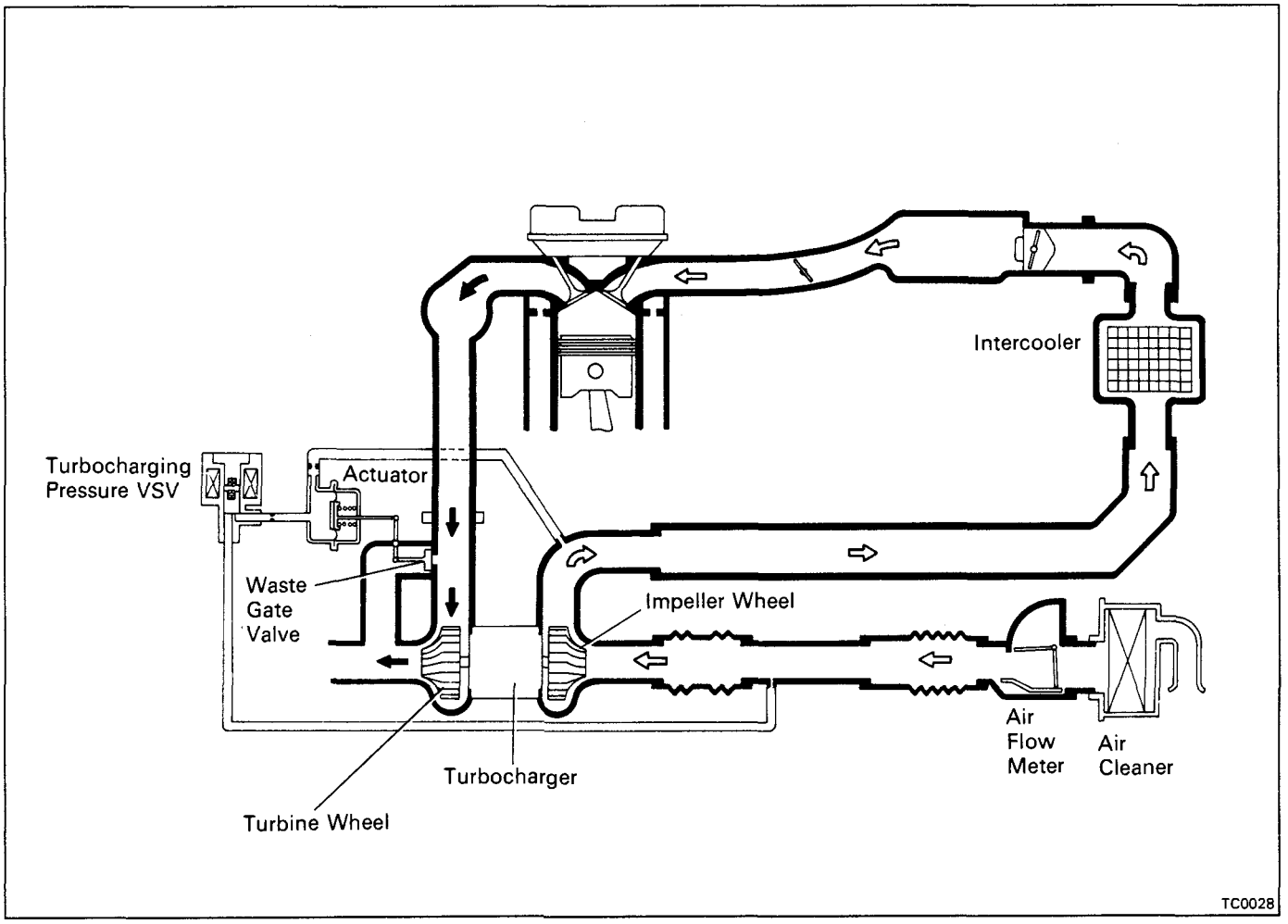

Operation of Turbocharger

Exhaust gas acts on the turbine wheel inside the turbine housing, causing it to revolve. When the turbine wheel revolves, the impeller which is located on the same shaft also revolves, compressing the intake air which has passed through the air flow meter from the air cleaner. When expelled from the compressor housing the compressed air is supplied to the cylinders. When the engine speed increases, the exhaust gas volume increases and the turbine wheel revolutions increase (approx. 20,000 – 110,000 rpm), thus the turbocharged air pressure grows greater and engine output increases.

Waste Gate Valve

Although on the one hand high output is achieved by turbo-charging, if the turbocharged air pressure becomes too high, knocking occurs and, on the contrary, a reduction in engine output is caused. If the turbocharged air pressure exceeds the prescribed air pressure, the flow of exhaust gas by-passes the turbine, controlling turbine wheel revolutions and turbocharged air pressure. This by-pass valve which controls the quantity of exhaust gas flowing to the turbine is called the waste gate valve. When the turbocharged air pressure exceeds the prescribed pressure, the actuator operates, the waste gate valve opens and part of the exhaust gas by-passes the turbine. This causes a drop in the turbine revolution rate and controls the turbocharged air within the prescribed limits.

Intercooler

The intercooler cools the turbocharged air (intake air) put out by the turbocharger, thereby increasing the air density. As the intake air temperature decreases, the gas temperature in the combustion chamber falls and the occurrence of knocking is suppressed, giving an increase in engine output.

The Celica MR2 intercooler is an air cooling type located at the top of the engine, utilizing the vehicle windstream to cool the turbocharged air.

PRECAUTIONS

1. Do not stop the engine immediately after pulling a trailer or high speed or uphill driving. Idle the engine for 20 – 120 seconds, depending on the severity of the driving condition.

2. Avoid sudden racing or acceleration immediately after starting a cold engine.

3. If the engine is run with the air cleaner removed, foreign material entering will damage the wheels which run at extremely high speed.

4. If the turbocharger is defective and must be replaced, first check for the cause of the defect in reference to the following items and replace parts if necessary:
   - Engine oil level and quality
   - Conditions under which the turbocharger was used
   - Oil lines leading to the turbocharger

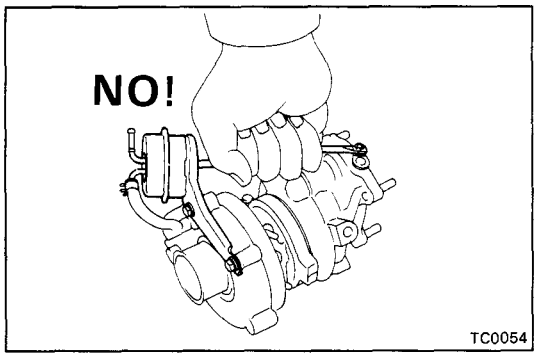

5. Use caution when removing and reinstalling the turbocharger assembly. Do not drop it or bang it against anything or grasp it by easily-deformed parts, such as the actuator or rod, when moving it.

6. Before removing the turbocharger, plug the intake and exhaust ports and oil inlet to prevent entry of dirt or other foreign material.

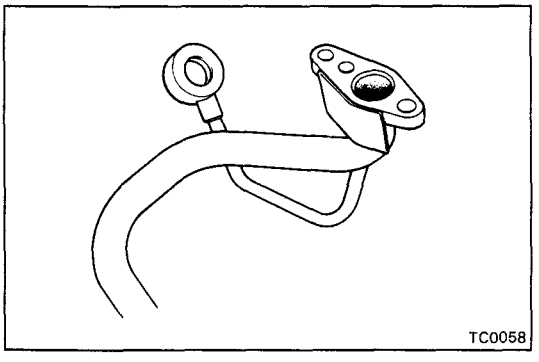

7. If replacing the turbocharger, check for accumulation of sludge particles in the oil pipes, and if necessary, replace the oil pipes.

8. Completely remove the gasket adhered to the lubrication oil pipe flange and turbocharger oil flange.

9. If replacing bolts or nuts, do so only with the specified new ones to guard against breakage or deformation.

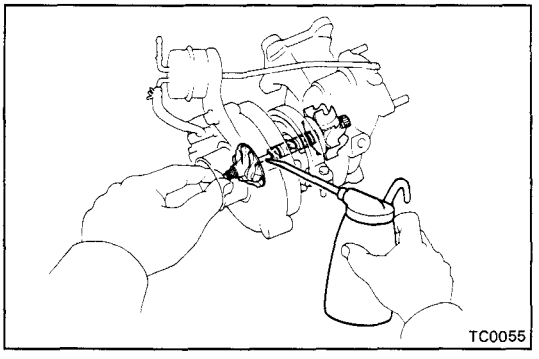

10. If replacing the turbocharger, put 20 cc (1.2 cu in.) of oil into the turbocharger oil inlet and turn the impeller wheel by hand to spread oil to the bearing.

11. If overhauling or replacing the engine, cut the fuel supply after reassembly and crank the engine for 30 seconds to distribute oil throughout the engine. Then allow the engine to idle for 60 seconds.

TROUBLESHOOTING

HINT: Before troubleshooting the turbocharger, first check the engine itself. (Valve clearance, engine compression, ignition timing etc.)

INSUFFICIENT ACCELERATION, LACK OF POWER OR EXCESSIVE FUEL CONSUMPTION

(Possible Cause)	(Check Procedure and Correction Method)
1. TURBOCHARGING PRESSURE TOO LOW	Check turbocharging pressure.(See Page TC-7) **Turbocharging pressure:** **0.50 – 0.83 kg/cm²** **(7.1 – 11.8 psi, 49 –81 kps)** If the pressure is below specification, begin diagnosis from item 2.
2. RESTRICTED INTAKE SYSTEM	Check intake air system, and repair or replace parts as necessary.(See page TC-9)
3. LEAK IN INTAKE AIR SYSTEM	Check intake air system, and repair or replace parts as necessary. (See page TC-9)
4. RESTRICTED EXHAUST SYSTEM	Check exhaust system, and repair or replace parts as necessary. (See page TC-9)
5. LEAK IN EXHAUST SYSTEM	Check exhaust system, and repair or replace parts as necessary. (See page TC-9)
6. ERRATIC TURBOCHARGER OPERATION	Check rotation of impeller wheel. If it does not turn or turn with a heavy drag, replace the turbocharger assembly. Check axial and radial plays of impeller wheel. (See page TC-13) **Axial play: 0.13 mm (0.0051 in.) or less** **Radial play: 0.18 mm (0.0071 in.) or less** If not within specification, replace the turbocharger assembly.

ABNORMAL NOISE

(Possible Cause)	(Check Procedure and Correction Method)
1. TURBOCHARGING HEAT INSULATOR RESONNANCE	Check for loose, improperly installed or deformed insulator mount bolts, and repair or replace as necessary.
2. EXHAUST PIPE LEAKING OR VIBRATING	Check for deformed exhaust pipe, loose mount bolts or damaged gasket, and repair or replace as necessary.
3. ERRATIC TURBOCHARGER OPERATION	Refer to Item 6 of INSUFFICIENT ACCELERATION, LACK OF POWER OR EXCESSIVE FUEL CONSUMPTION.

EXCESSIVE OIL CONSUMPTION OR WHITE EXHAUST

(Possible Cause)	(Check Procedure and Correction Method)
FAULTY TURBOCHARGER SEAL	Check for oil leakage in exhaust system. • Remove the turbine elbow from the turbocharger and check for excessive carbon deposits on the turbine wheel. Excessive carbon deposits indicate a faulty turbocharger. Check for oil leakage in intake air system. • Check for axial and radial plays in impeller wheel, and replace the turbocharger if necessary. (See page TC-13) **Axial play: 0.13 mm (0.0051 in.) or less** **Radial play: 0.18 mm (0.0071 in.) or less** **NOTICE: There is some oil mist from the PCV in the blowby gas so care must be taken not to diagnosis this as oil leakage from the turbocharger.**

TURBOCHARGER

ON-VEHICLE INSPECTION OF TURBOCHARGER

1. INSPECT INTAKE AIR SYSTEM

Check for leakage or clogging between the air cleaner and turbocharger inlet and between the turbocharger outlet and cylinder head.

- Clogged air cleaner . . . . Clean or replace element
- Hoses collapsed or deformed . . . . Repair or replace
- Leakage from connections . . . . Check each connection and repair
- Cracks in components . . . . Check and replace

2. INSPECT EXHAUST SYSTEM

Check for leakage or clogging between the cylinder head and turbocharger inlet and between the turbocharger outlet and exhaust pipe.

- Deformed components . . . . Repair or replace
- Foreign material in passages . . . . Remove
- Leakage from components . . . . Repair or replace
- Cracks in components . . . . Check and replace

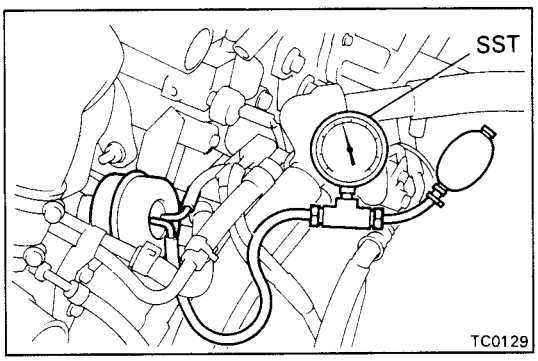

3. INSPECT ACTUATOR OPERATION

(a) Disconnect the actuator hose.

(b) Using SST (turbocharger pressure gauge), apply approx. 0.66 kg/cm^2 (9.4 psi, 65 kpa) of pressure to the actuator and check that the rod moves.

If the rod does not move, replace the turbocharger assembly.

SST 09992-00241

NOTICE: Never apply more than 0.83 kg/cm^2 (11.8 psi, 81 kPa) of pressure to the actuator.

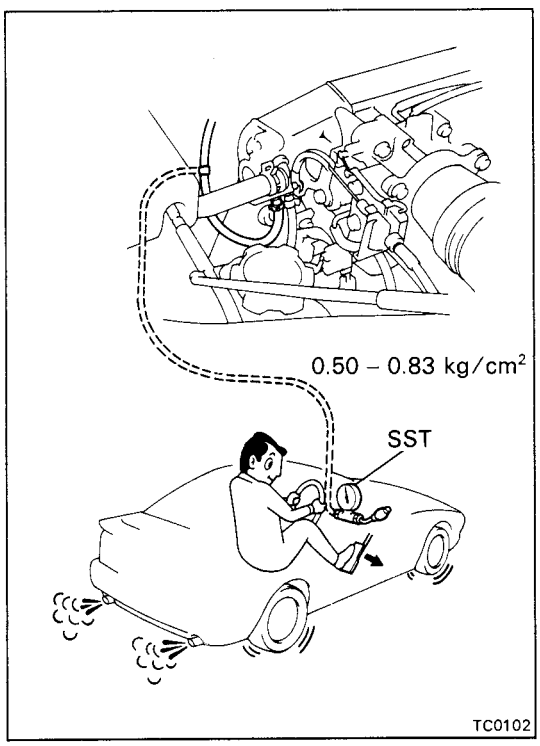

4. CHECK TURBOCHARGING PRESSURE

(a) Using a 3-way connector, connect SST (turbocharger pressure gauge) to the hose between the intake manifold and turbocharging pressure sensor.

SST 09992-00241

(b) While driving with the engine running at 2,800 rpm or more with the throttle valve fully open in the 3rd gear, check the turbocharging pressure.

Standard pressure: 0.50 – 0.83 kg/cm^2 (7.1 – 11.8 psi, 49 – 81 kPa)

If the pressure is less than that specified, check the intake air and exhaust systems for leakage. If there is no leakage, replace the turbocharger assembly.

If the pressure is above specification, check if the actuator hose is disconnected or cracked. If not, replace the turbocharger assembly.

5. **INSPECT IMPELLER WHEEL ROTATION**
(See step 1 on page TC-13)

6. **INSPECT TURBOCHARGING PRESSURE VSV**
(See page FI-165)

7. **INSPECT TURBOCHARGING PRESSURE SENSOR**
(See page FI-171)

COMPONENTS

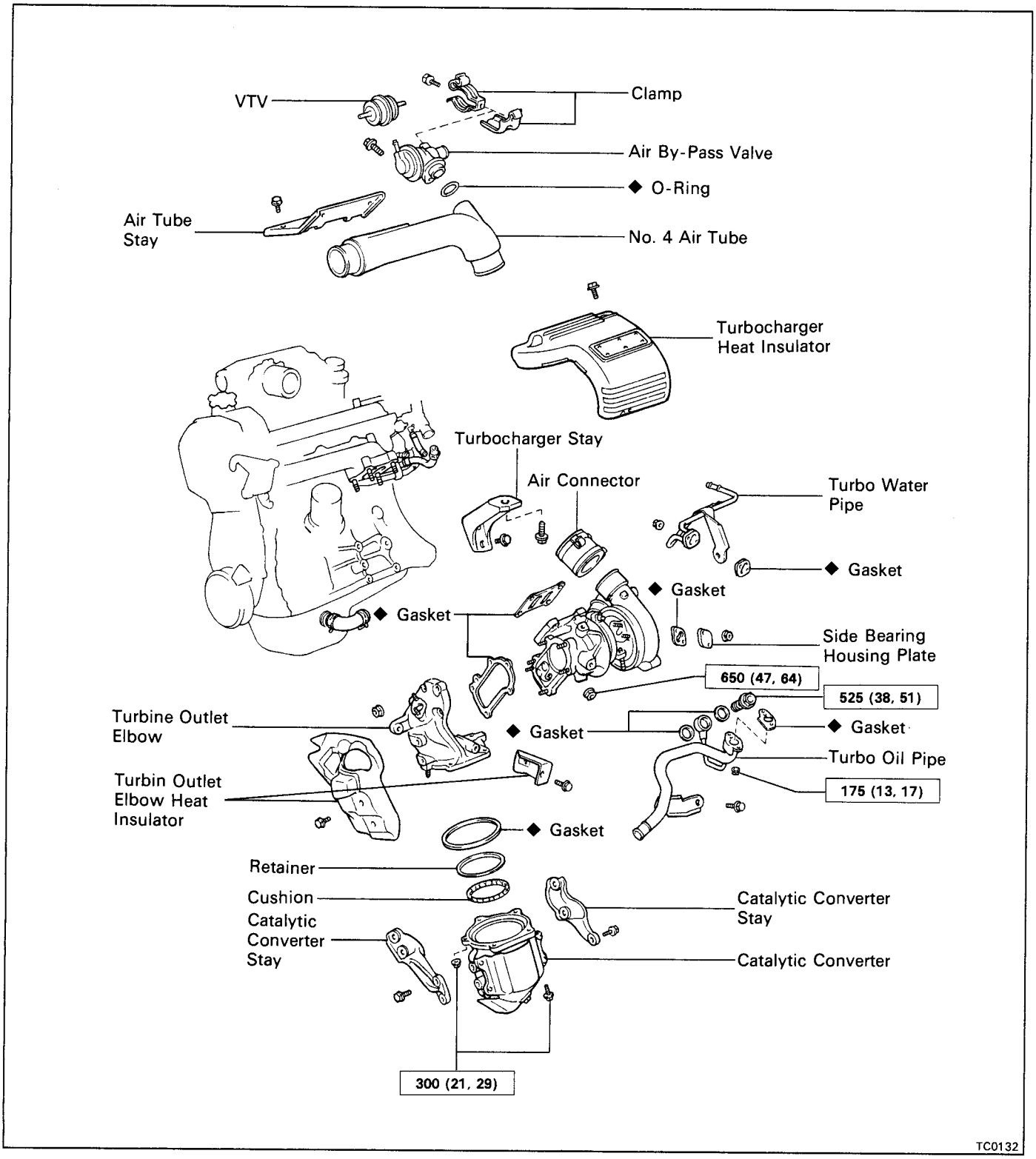

REMOVAL OF TURBOCHARGER

1. **DISCONNECT CABLE FROM NEGATIVE TERMINAL OF BATTERY**

   CAUTION: Work must be started after approx. 20 seconds or longer from the time the ignition switch is turned to the "LOCK" position and the negative (–) terminal cable is disconnected from the battery.

2. **DRAIN ENGINE COOLANT (See page CO-6)**

3. **REMOVE ENGINE UNDER COVERS**

4. **REMOVE LH ENGINE HOOD SIDE PANEL**

5. **REMOVE SUSPENSION UPPER BRACE (See step 8 on page EM-134)**

6. **REMOVE AIR CLEANER (See step 9 on page EM-134)**

7. **REMOVE NO.1 AND NO.2 AIR INTAKE CONNECTORS (See steps 4 and 5 on page TC-20)**

8. **DISCONNECT TRANSAXLE CONTROL CABLES (See step 29 on page EM-138)**

9. **REMOVE FRONT EXHAUST PIPE (See steps 30 and 31 on pages EM-138 and 139)**

10. **REMOVE IDLER PULLEY BRACKET AND A/C COMPRESSOR (See steps 10 to 12 on page TC-21 and 22)**

11. **REMOVE FRONT ENGINE MOUNTING INSULATOR (See step 38 on page EM-141)**

12. **REMOVE FRONT MOUNTING BRACKET AND CLUTCH RELEASE CYLINDER (See step 39 on page EM-141)**

13. **REMOVE ENGINE COMPARTMENT COOLING FAN (See steps 4 and 5 on page CO-34)**

14. **REMOVE CATALYTIC CONVERTER (See step 14 on page EM-64)**

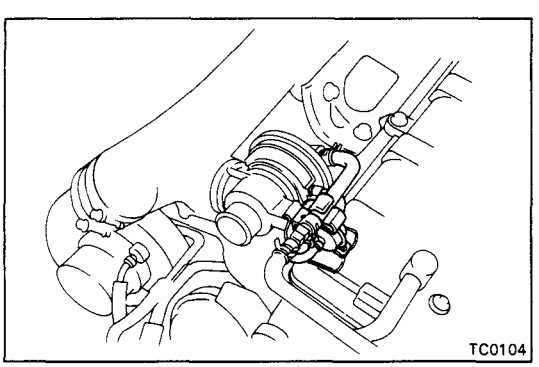

15. **DISCONNECT AIR BY-PASS HOSES**
    (a) Disconnect the hose and VTV from the clamp.
    (b) Disconnect the two air by-pass hoses.

16. **REMOVE CLAMPS OF AIR BY-PASS HOSE AND VTV**
    Remove the bolt and two clamps.

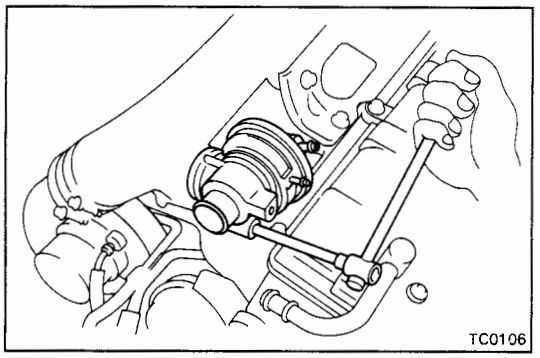

17. REMOVE AIR BY-PASS VALVE

(a) Remove the bolt and air by-pass valve.

(b) Remove the O-ring from the air by-pass valve.

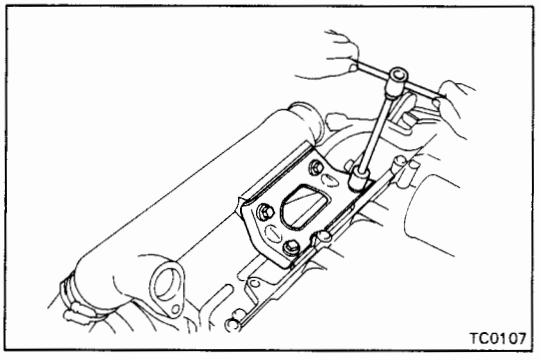

18. REMOVE NO.4 AIR TUBE

(a) Remove the four bolts and air tube stay.

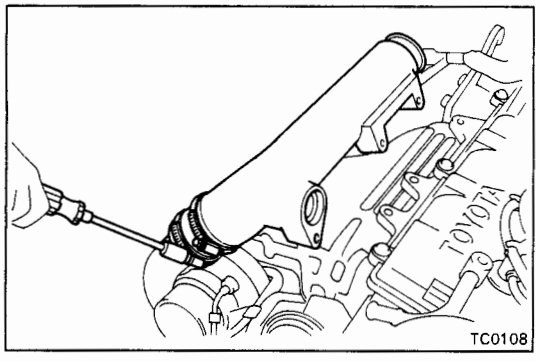

(b) Loosen the hose clamp, and remove the air tube.

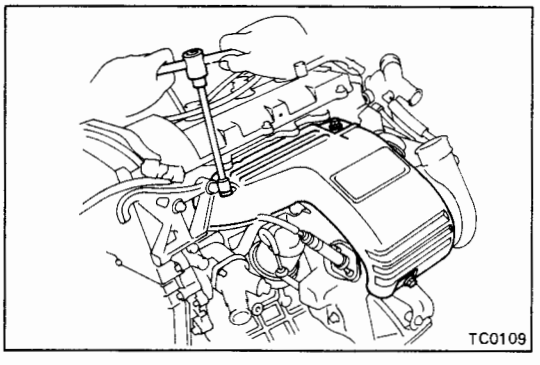

19. REMOVE TURBOCHARGER HEAT INSULATOR

Remove the three bolts and heat insulator.

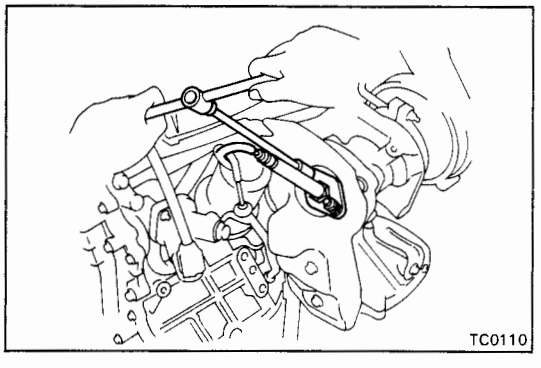

20. REMOVE OXYGEN SENSOR

(a) Disconnect the oxygen sensor connector.

(b) Remove the two nuts, oxygen sensor and gasket.

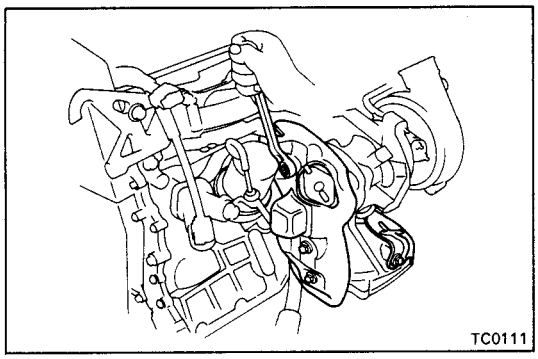

21. REMOVE HEAT INSULATORS OF TURBINE OUTLET ELBOW

(a) Remove the oil dipstick.

(b) Remove the three bolts and RH heat insulator.

(c) Remove the two bolts and LH heat insulator.

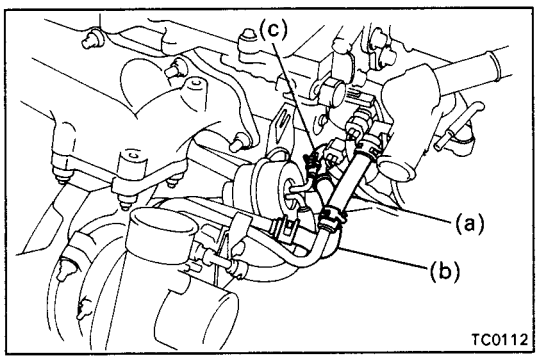

22. DISCONNECT HOSES

(a) Water hose from water inlet housing

(b) Water by-pass hose from water by-pass pipe

(c) Vacuum hose from actuator

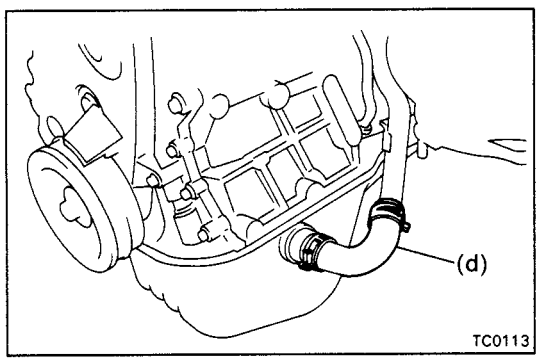

(d) Oil hose from turbo oil pipe

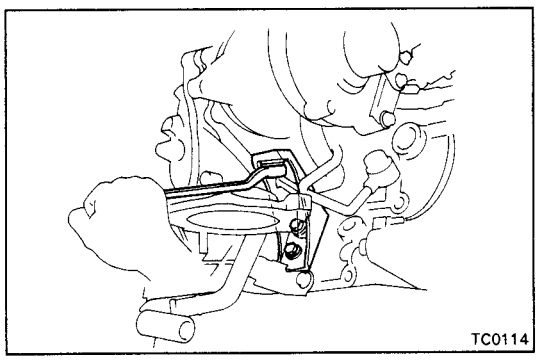

23. REMOVE TURBOCHARGER STAY

Remove the three bolts and turbocharger stay.

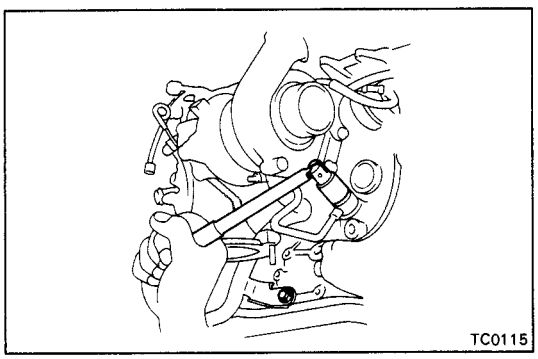

24. REMOVE TURBOCHARGER

(a) Remove the bolt and union bolt holding the No.1 turbo oil pipe to the cylinder block. Remove the two union bolt gaskets.

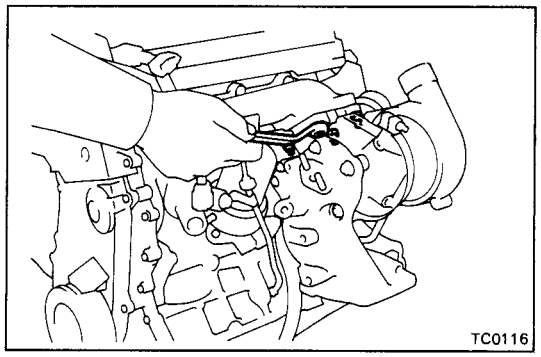

(b) Remove the four nuts, turbocharger and gasket.

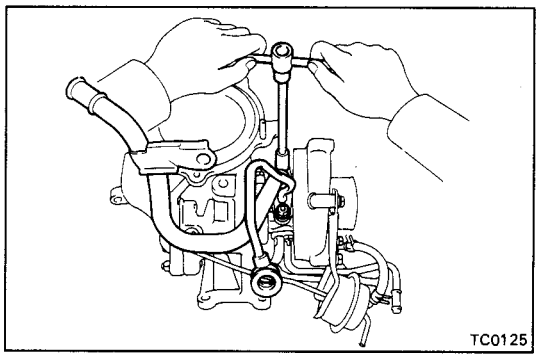

25. REMOVE TURBO OIL PIPE

Remove the two nuts, oil pipe and gasket.

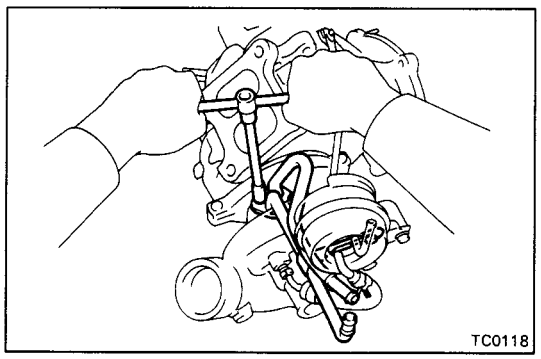

26. REMOVE TURBO WATER PIPE

Remove the two nuts, two bolts, water pipe and gasket.

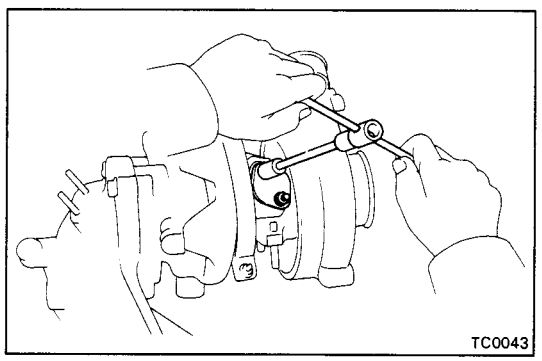

27. REMOVE SIDE BEARING HOUSING PLATE

Remove the two nuts, housing plate and gasket.

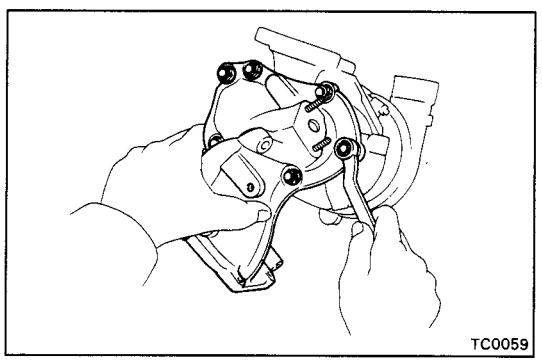

28. REMOVE TURBINE OUTLET ELBOW

Remove the six nuts, outlet elbow and gasket.

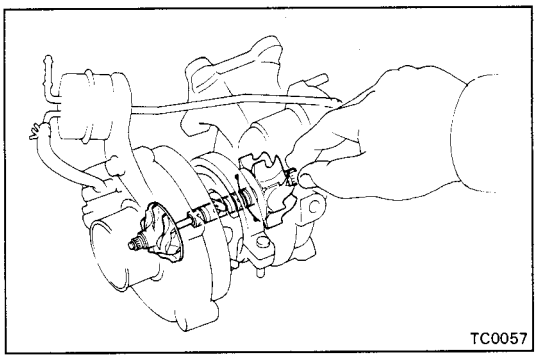

INSPECTION OF TURBOCHARGER

1. INSPECT IMPELLER WHEEL ROTATION

Grasp the edge of the turbine wheel and turn it. Check that the impeller wheel turns smoothly.

If the impeller wheel does not turn or if it turns with a drag, replace the turbocharger assembly.

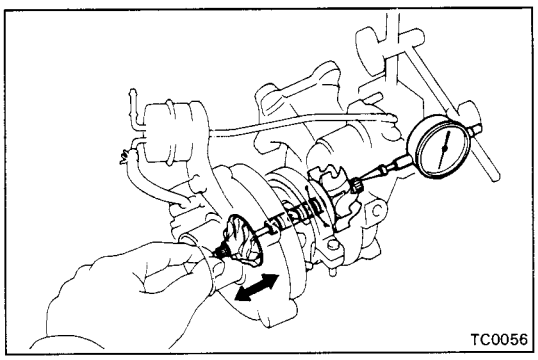

2. INSPECT AXIAL PLAY OF IMPELLER WHEEL

Insert a dial indicator into the intake side hole the turbine wheel edge by and check the axial play.

Standard clearance: 0.13 mm (0.0051 in.) or less

If the axial play is not as specified, replace the turbocharger assembly.

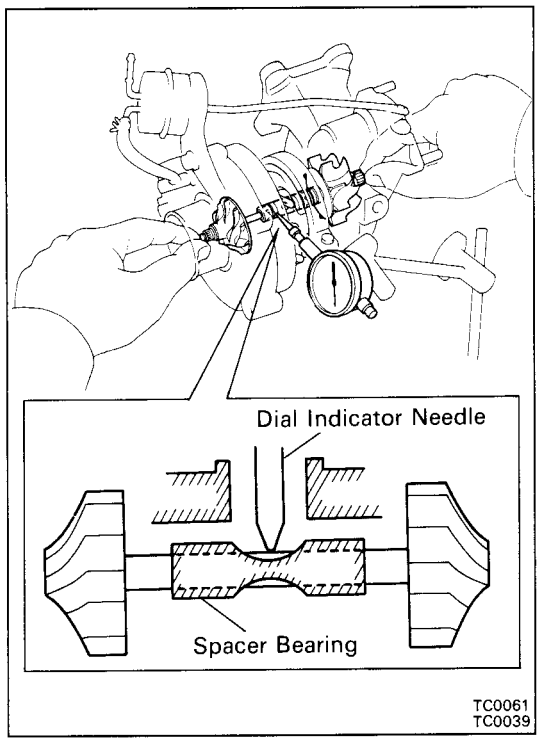

3. INSPECT RADIAL PLAY OF IMPELLER WHEEL

(a) From oil outlet hole, insert a dial indicator through the hole in the spacer bearing and set it in the center of the impeller shaft.

(b) Move the impeller shaft in a radial direction, measure the radial play of the impeller shaft.

Standard clearance: 0.18 mm (0.0071 in.) or less

If the radial play is not as specified, replace the turbocharger assembly.

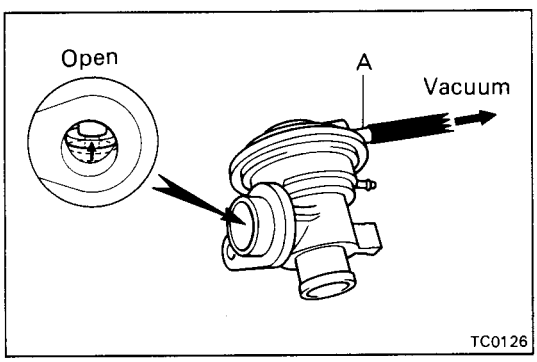

4. INSPECT AIR BY-PASS VALVE

(a) Apply vacuum to port A, and check that the valve is open.

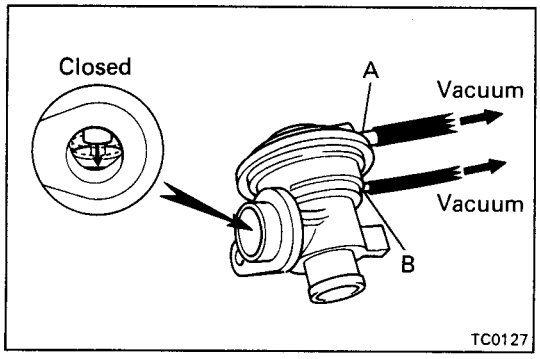

(b) In the preceding condition, apply vacuum to port B, and check that the valve is closed.

If operation is not as specified, replace the air by-pass valve.

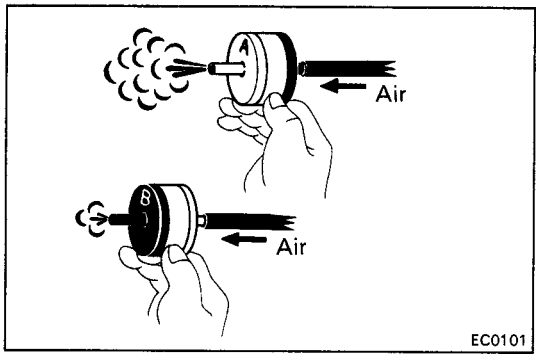

5. **INSPECT VTV (FOR AIR BY-PASS VALVE)**

(a) Check that air flows without resistance from ports "B" to "A".

(b) Check that air flows without difficuity from ports "A" to "B".

If operation is not as specified, replace the VTV.

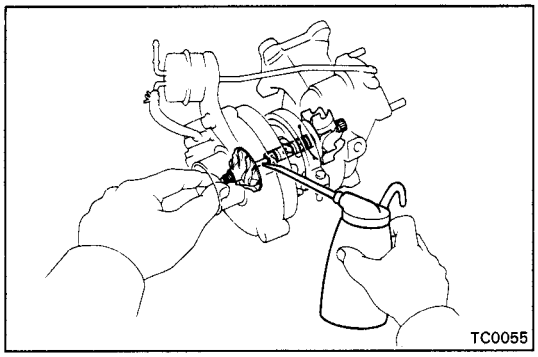

INSTALLATION OF TURBOCHARGER

(See page TC-8)

NOTICE: After replacing the turbocharger assembly, pour approx. 20 cc (1.2 cu in.) of new oil into the oil inlet and turn the impeller wheel by hand to splash oil on the bearing.

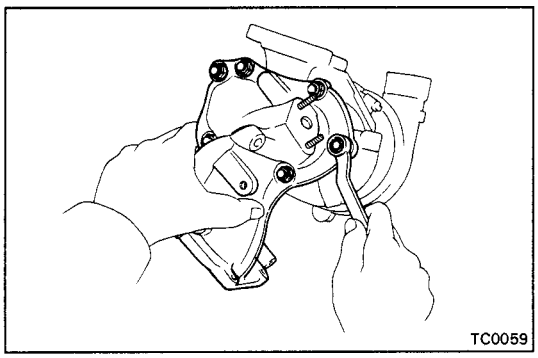

1. INSTALL TURBINE OUTLET ELBOW

Install a new gasket and the outlet elbow with the six nuts.

Torque: 650 kg-cm (47 ft-lb, 64 N·m)

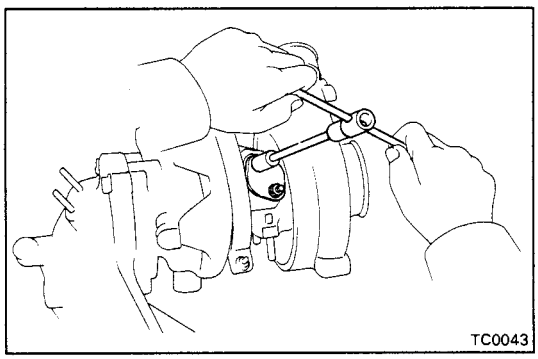

2. INSTALL SIDE BEARING HOUING PLATE

Install a new gasket and the housing plate with the two nuts.

Torque: 120 kg-cm (9 ft-lb, 11 N·m)

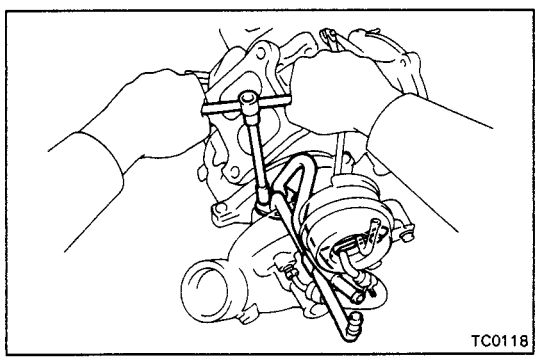

3. INSTALL TURBO WATER PIPE

Install a new gasket and the water pipe with the two nuts and two bolts.

Torque: 120 kg-cm (9 ft-lb, 11 N·m)

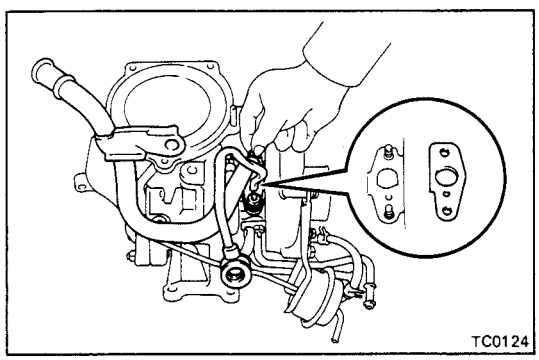

4. INSTALL TURBO OIL PIPE

(a) Align the oil holes of the a new gasket and the turbocharger housing.

(b) Install the gasket and oil pipe with the two nuts. Do not torque the nuts yet.

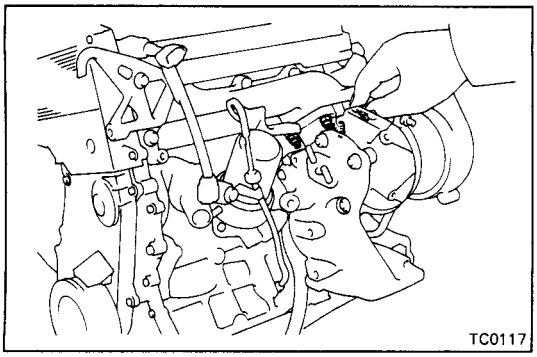

5. INSTALL TURBOCHARGER

(a) Install a new gasket and the turbocharger with the four nuts. Do not torque the nuts.

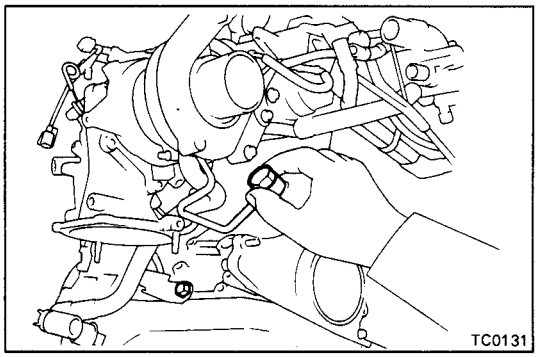

(b) Install the oil pipe with the bolt, two new gaskets and union bolt. Do not torque the bolt and union bolt.

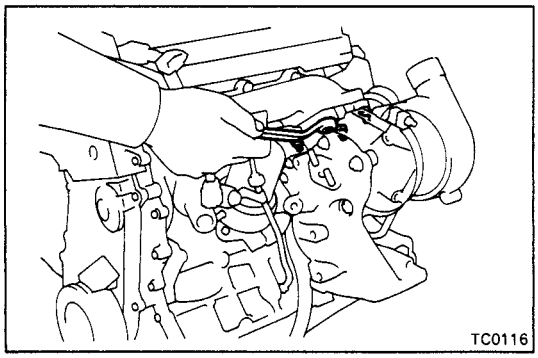

(c) Tighten the four nuts holding the turbocharger to the exhaust manifold.

Torque: 650 kg-cm (47 ft-lb, 64 N·m)

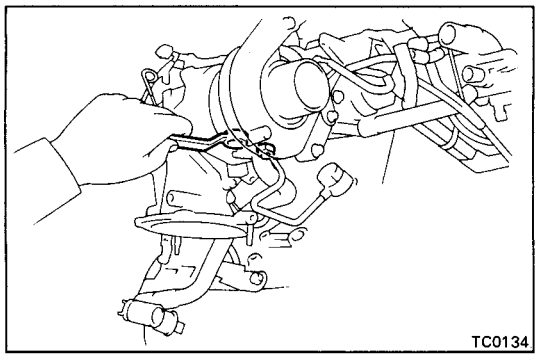

(d) Tighten the two nuts holding the oil pipe to the turbocharger.

Torque: 175 kg-cm (13 ft-lb, 17 N·m)

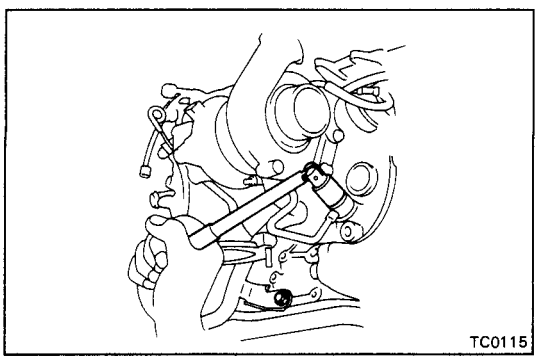

(e) Tighten the union bolt holding the oil pipe to the cylinder block.

Torque: 525 kg-cm (38 ft-lb, 51 N·m)

(f) Tighten the union bolt holding the oil pipe to the cylinder block.

Torque: 440 kg-cm (32 ft-lb, 43 N·m)

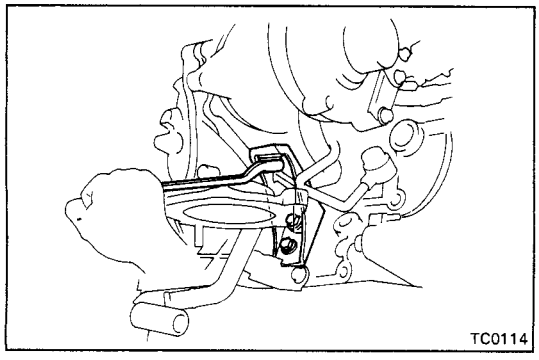

6. INSTALL TURBOCHARGER STAY

Install the turbocharger stay with the three bolts.

Torque:

To turbocharger	**705 kg-cm (51 ft-lb, 69 N·m)**
To cylinder block	**600 kg-cm (43 ft-lb, 59 N·m)**

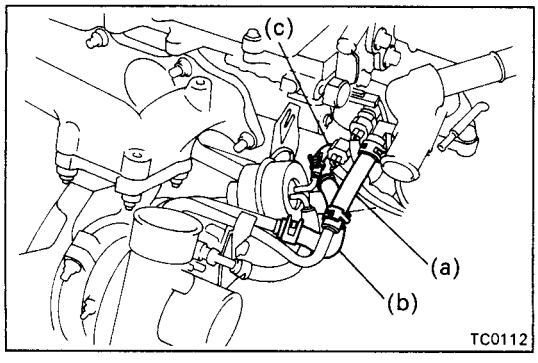

7. CONNECT HOSES

(a) Water hose from water inlet housing

(b) Water by-pass hose from water by-pass pipe

(c) Vacuum hose from actuator

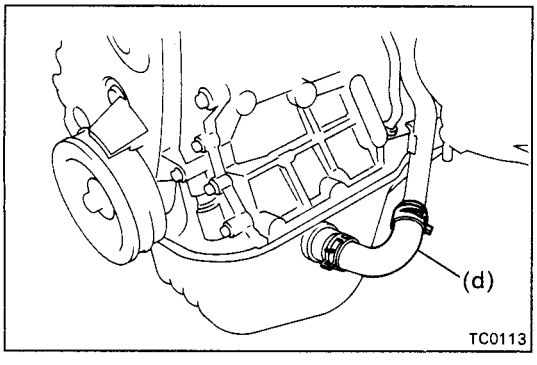

(d) Oil hose from turbo oil pipe

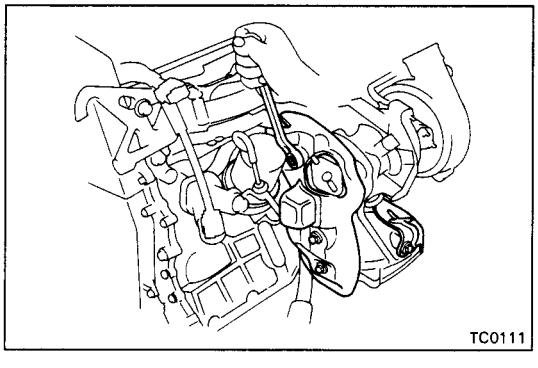

8. INSTALL HEAT INSULATORS OF TURBINE OUTLET ELBOW

(a) Install the RH heat insulator with the three bolt.

(b) Install the LH heat insulator with the two bolt.

(c) Install the oil dipstick gauge.

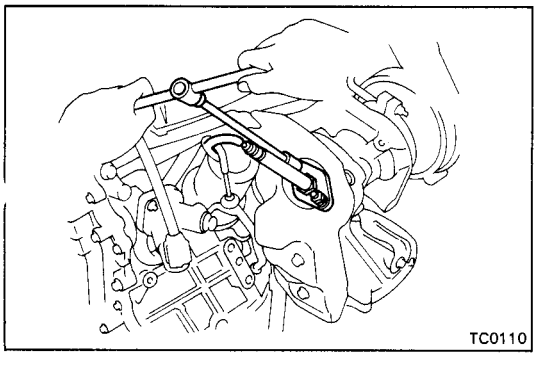

9. INSTALL OXYGEN SENSOR

(a) Install a new gaskets and the oxygen sensor with the two nuts.

Torque: 450 kg-cm (33 ft-lb, 44 N·m)

(b) Connect the oxygen sensor connector.

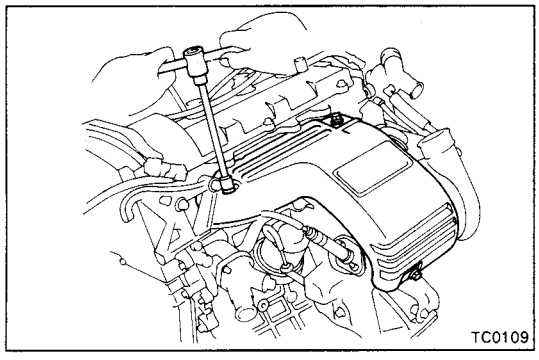

10. INSTALL TURBOCHARGER HEAT INSULATOR

Install the heat insulator with the three bolt.

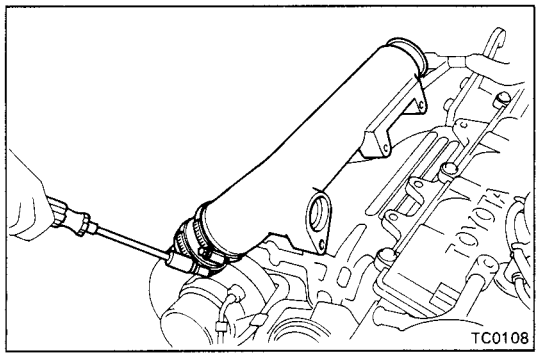

11. INSTALL NO.4 AIR TUBE

(a) Connect the air connector and air tube to the turbocharger.

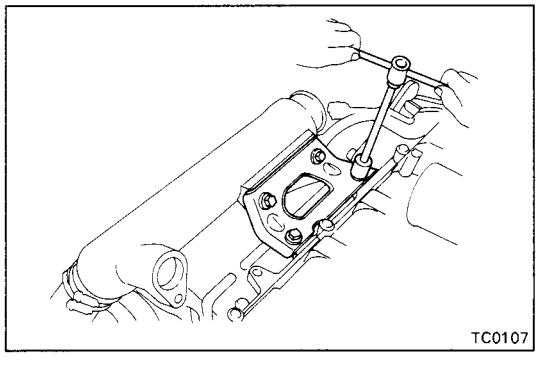

(b) Install the air tube stay with the four bolts.

Torque: 195 kg-cm (14 ft-lb, 19 N·m)

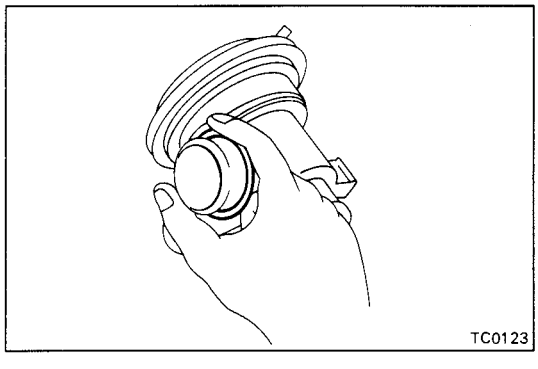

12. INSTALL AIR BY-PASS VALVE

(a) Install a new O-ring to the air by-pass valve.

(b) Apply soapy water on the O-ring.

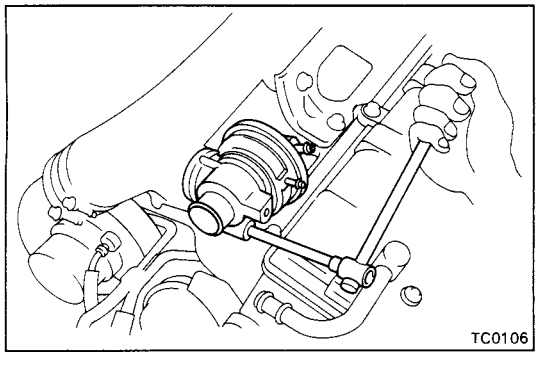

(c) Install the air by-pass valve with the bolt.

Torque: 195 kg-cm (14 ft-lb, 19 N·m)

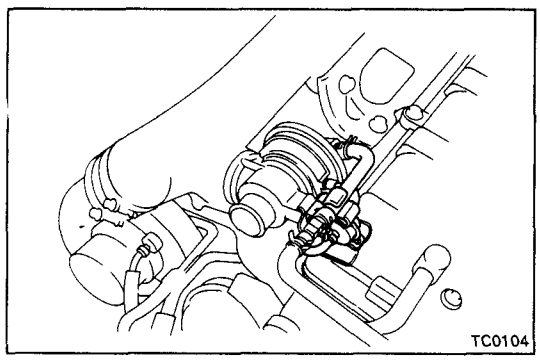

13. **INSTALL CLAMPS OF AIR BY-PASS HOSE AND VTV**
    Install the two clamps with the bolt.

14. **CONNECT AIR BY-PASS HOSES**
    (a) Connect the two air by-pass hoses.
    (b) Install the air by-pass hose and VTV to the clamps.

15. **INSTALL CATALYTIC CONVERTER**
    (See step 28 on page EM-94)

16. **INSTALL ENGINE COMPARTMENT COOLING FAN**
    (See steps 1 and 2 on page CO-36)

17. **INSTALL FRONT MOUNTING BRACKET AND CLUTCH RELEASE CYLINDER**
    (See step 9 on pages EM-171 and 172)

18. **INSTALL FRONT ENGINE MOUNTING INSULATOR**
    (See step 10 on page EM-172)

19. **INSTALL A/C COMPRESSOR AND IDLER PULLEY BRACKET**
    (See steps 3 to 5 on pages TC-23 and 24)

20. **INSTALL FRONT EXHAUST PIPE**
    (See steps 18 and 19 on pages EM-174 and 175)

21. **CONNECT TRANSAXLE CONTROL CABLES**
    (See step 20 on page EM-175)

22. **INSTALL NO.1 AND NO.2 AIR INTAKE CONNECTORS**
    (See steps 10 and 11 on page TC-25)

23. **INSTALL AIR CLEANER**
    (See step 40 on page EM-179)

24. **INSTALL SUSPENSION UPPER BRACE**
    (See step 41 on page EM-179)

25. **FILL ENGINE WITH COOLANT (See page CO-7)**
    Capacity (w/ Heater):
    13.6 liters (14.4 US qts, 12.0 Imp. qts)

26. **CONNECT CABLE TO NEGATIVE TERMINAL OF BATTERY**

27. **START ENGINE AND CHECK FOR LEAKS**

28. **CHECK ENGINE OIL LEVEL**

29. **INSTALL LH ENGINE HOOD SIDE PANEL**

30. **INSTALL ENGINE UNDER COVERS**

INTERCOOLER

COMPONENTS

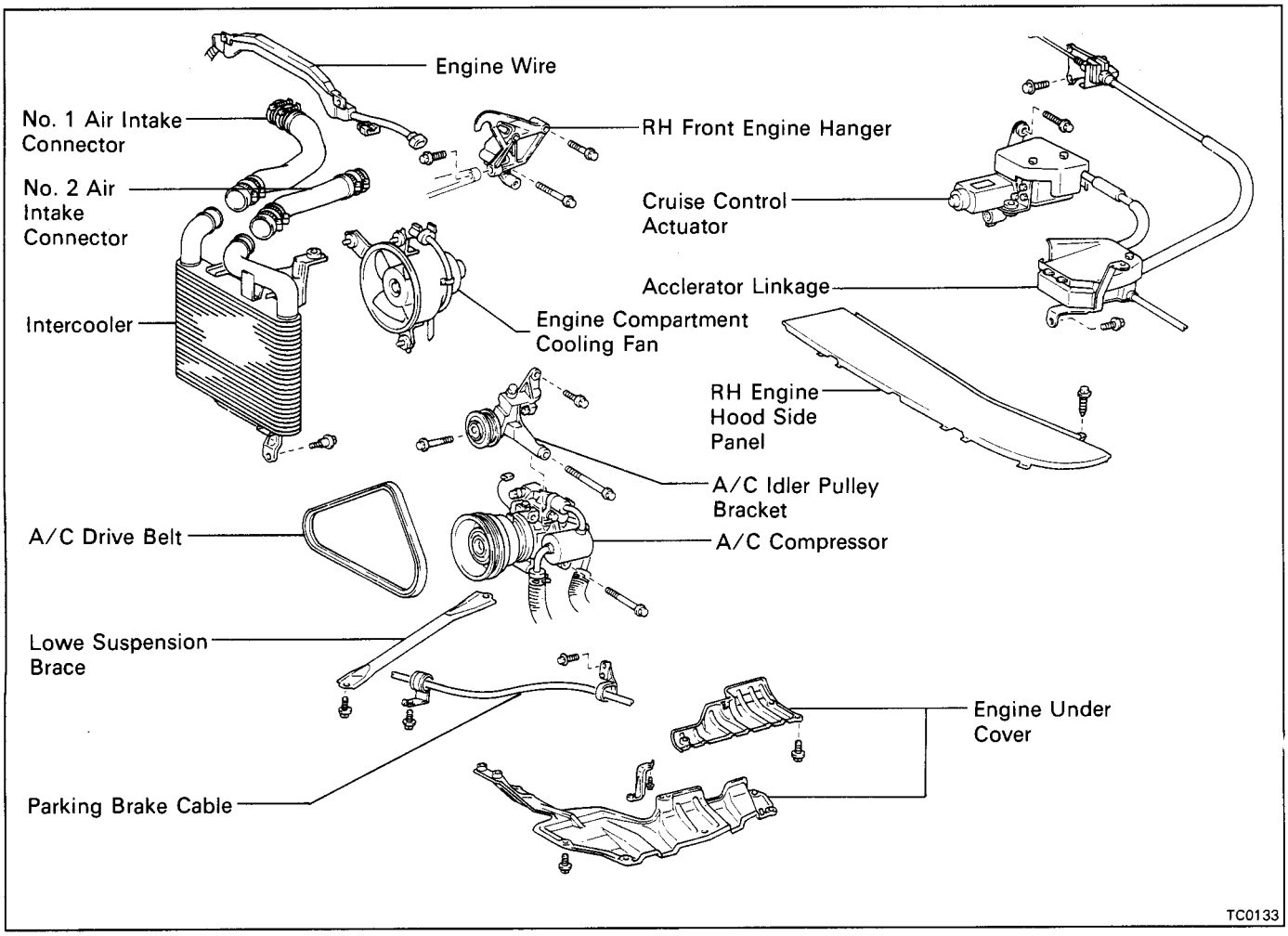

1. **DISCONNECT CABLE FROM NEGATIVE TERMINAL OF BATTERY**

   CAUTION: Work must be started after approx. 20 seconds or longer from the time the ignition switch is turned to the "LOCK" position and the negative (–) terminal cable is disconnected from the battery.

2. **REMOVE ENGINE UNDER COVERS**

3. **REMOVE RH ENGINE HOOD SIDE PANEL**

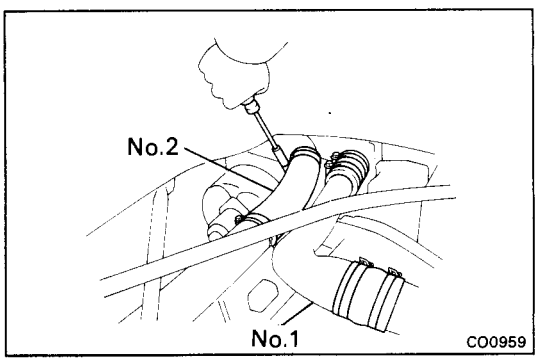

4. **REMOVE NO.1 AIR INTAKE CONNECTOR**

5. **REMOVE NO.2 AIR INTAKE CONNECTOR**

6. **REMOVE CRUISE CONTROL ACTUATOR (w/ CRUISE CONTROL SYSTEM) AND ACCELERATOR LINKAGE (See step 13 on page EM-135)**

7. **REMOVE ENGINE COMPARTMENT COOLING FAN**
(See steps 4 and 5 on page CO-34)

8. **DISCONNECT ENGINE WIRE CLAMPS FROM MOUNT BOLTS OF NO.2 TIMING BELT COVER**
(See step 12 (a) on page FI-111)

9. **REMOVE RH FRONT ENGINE HANGER**
(See step 11 on page EM-64)

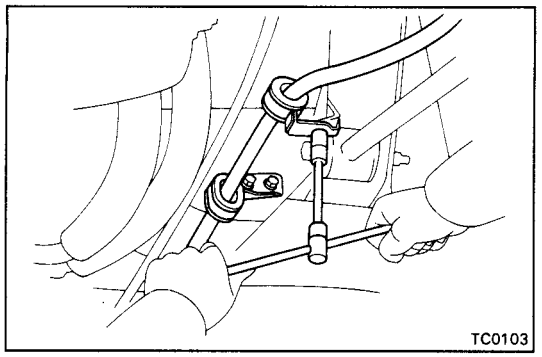

10. **DISCONNECT PARKING BRAKE CABLE FROM BODY**
Remove the three clamp bolts, and disconnect the parking brake cable.

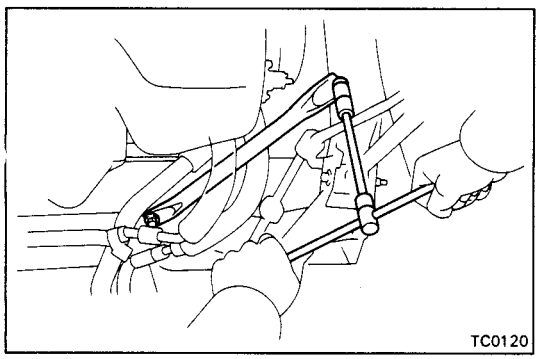

11. **REMOVE LOWER SUSPENSION BRACE**
Remove the two bolts and suspension brace.

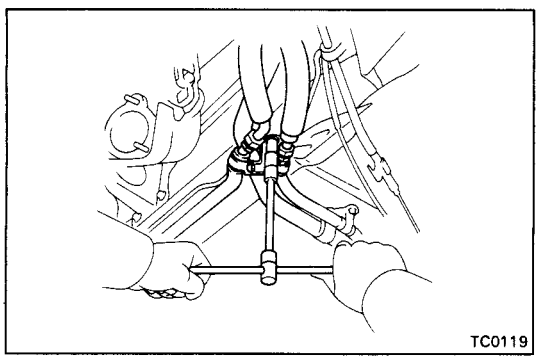

12. **REMOVE IDLER PULLEY BRACKET AND A/C COMPRESSOR**
(a) Remove the clamp nut, and disconnect the A/C hoses.

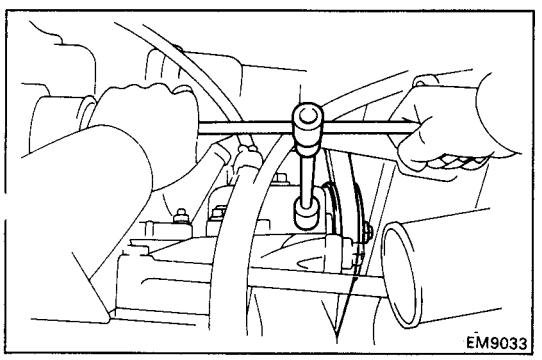

(b) Loosen the idler pulley nut and adjusting bolt, and remove the drive belt.

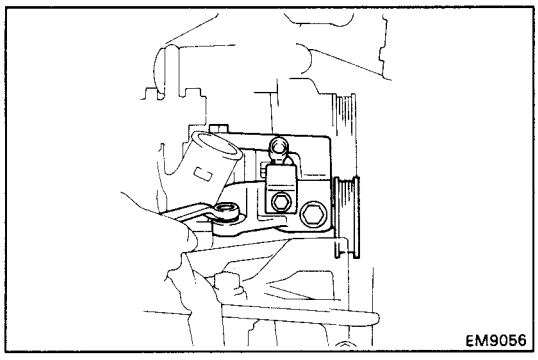

(c) Disconnect the A/C compressor connector.

(d) Remove the bolt and connector clamp of the A/C compressor.

(e) Remove the three bolts and idler pulley bracket.

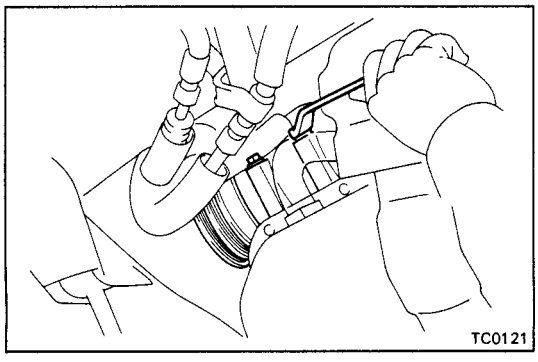

(f) Remove the two bolts, and disconnect the A/C compressor from the engine.

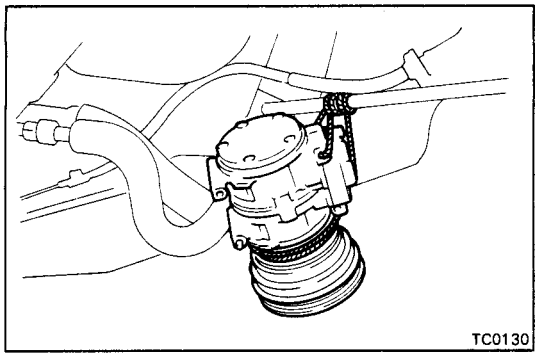

HINT: Suspend the compressor to the strut rod with a string.

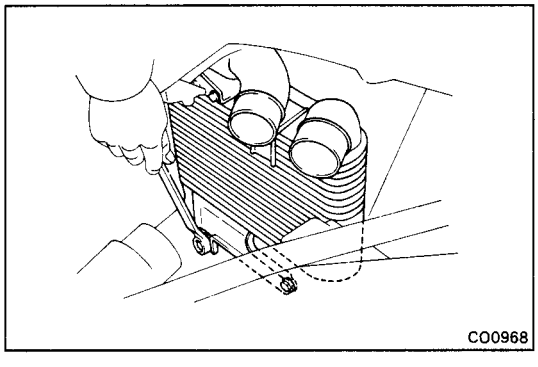

13. REMOVE INTERCOOLER

Remove the three bolts and intercooler.

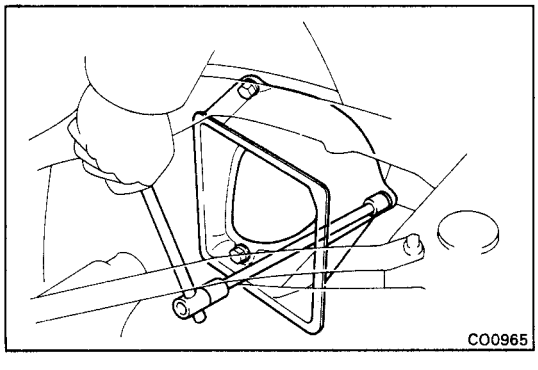

14. REMOVE COOL AIR INLET

Remove the three bolts and air inlet.

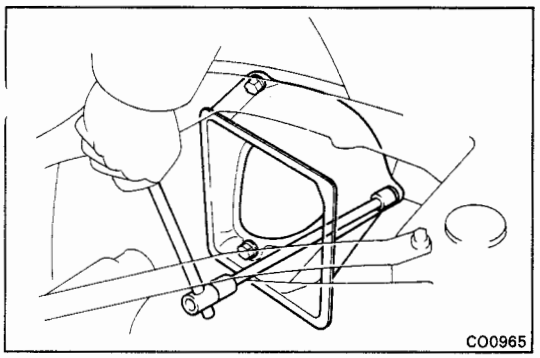

INSTALLATION OF INTERCOOLER

(See page TC-20)

1. INSTALL COOL AIR INLET

Install the air inlet with the three bolts.

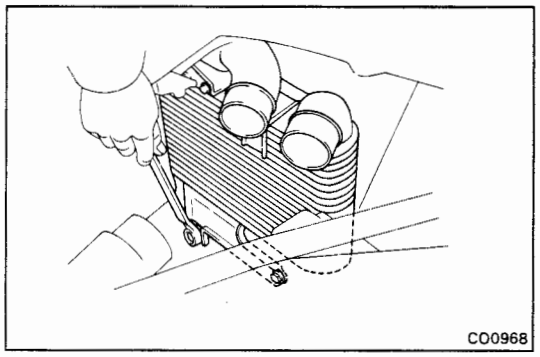

2. INSTALL INTERCOOLER

Install the intercooler with the three bolts.

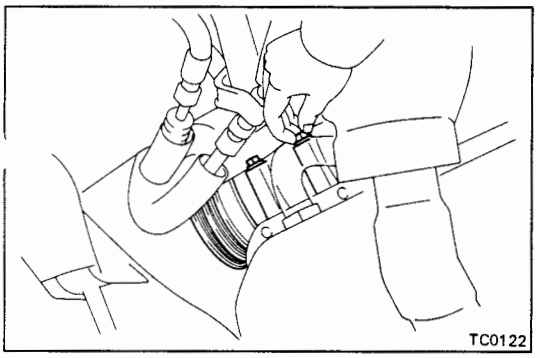

3. INSTALL A/C COMPRESSOR AND IDLER PULLEY BRACKET

(a) Temporarily install the A/C compressor with the two bolts.

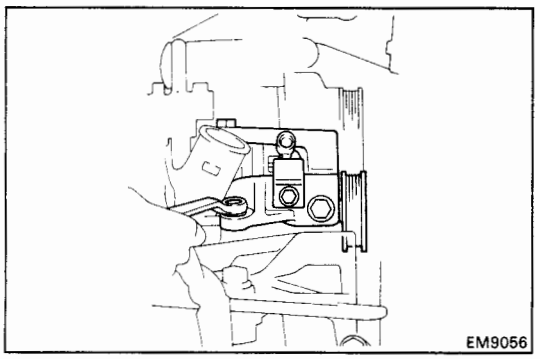

(b) Install the idler pulley bracket with three bolts.

Torque: A 275 kg-cm (20 ft-lb, 27 N·m)
B 375 kg-cm (27 ft-lb, 37 N·m)
C 250 kg-cm (18 ft-lb, 25 N·m)

(c) Install the connector clamp of the A/C compressor with the bolt.

(d) Connect the A/C compressor connector.

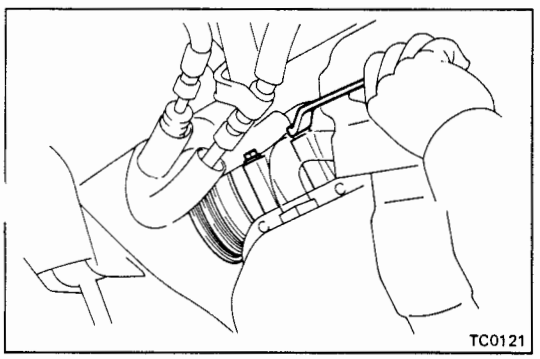

(e) Tighten the two bolts of the lower side holding the A/C compressor to the cylinder block.

Torque: 250 kg-cm (18 ft-lb, 25 N·m)

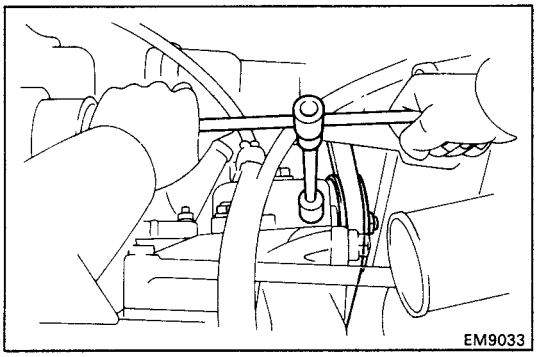

(f) Install the drive belt with the idler pulley nut and adjusting bolt.

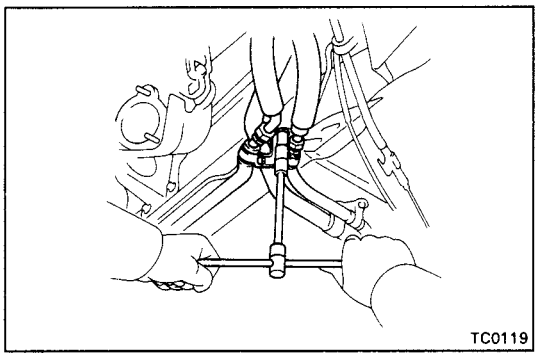

(g) Install the A/C hoses with the nut.

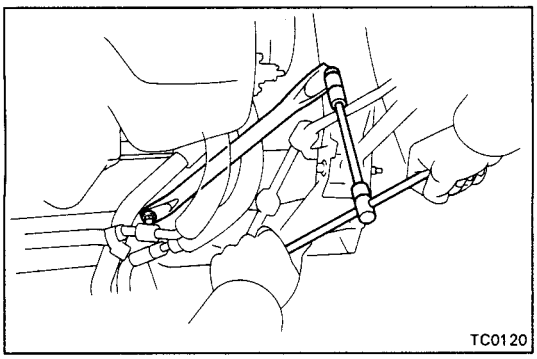

4. **INSTALL LOWER SUSPENSION BRACE**

Install the suspension brace with two bolts.

Torque: 740 kg-cm (54 ft-lb, 73 N·m)

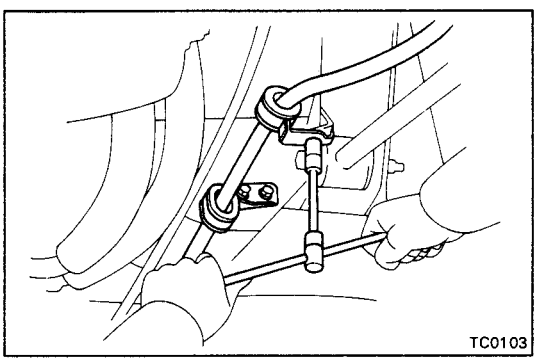

5. **INSTALL PARKING BRAKE CABLE**

Install the parking brake cable with the two clamps and three bolts.

6. **INSTALL RH FRONT ENGINE HANGER**
(See step 31 on page EM-95)

7. **INSTALL ENGINE WIRE CLAMPS TO MOUNT BOLTS OF NO.2 TIMING BELT COVER**
(See step 5 (b) on page FI-118)

8. **INSTALL ENGINE COMPARTMENT COOLING FAN**
(See steps 1 and 2 on page CO-36)

9. **INSTALL CRUISE CONTROL ACTUATOR (w/ CRUISE CONTROL SYSTEM) AND ACCELERATOR LINKAGE**
(See step 36 on page EM-178)

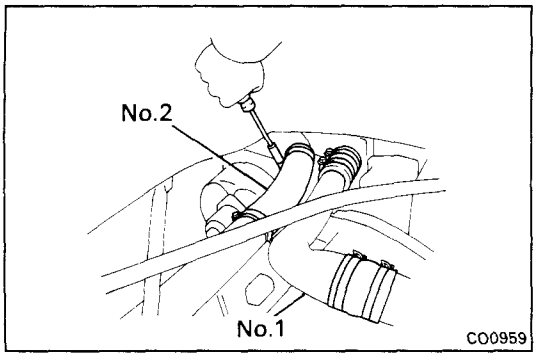

10. INSTALL NO.1 AIR INTAKE CONNECTOR

11. INSTALL NO.2 AIR INTAKE CONNECTOR

12. CONNECT CABLE TO NEGATIVE TERMINAL OF BATTERY

13. ADJUST A/C DRIVE BELT

Drive belt tension:	New belt	160 ± 25 lb
	Used belt	100 ± 20 lb

14. INSTALL RH ENGINE HOOD SIDE PANEL

15. INSTALL ENGINE UNDER COVERS

EMISSION CONTROL SYSTEMS

	Page
(3S-GTE)	
SYSTEM PURPOSE	EC-2
COMPONENT LAYOUT AND SCHEMATIC DRAWING	EC-3
POSITIVE CRANKCASE VENTILATION (PCV) SYSTEM	EC-4
FUEL EVAPORATIVE EMISSION CONTROL (EVAP) SYSTEM	EC-21
EXHAUST GAS RECIRCULATION (EGR) SYSTEM	EC-24
THREE-WAY CATALYST (TWC) SYSTEM	EC-28
(5S-FE)	
SYSTEM PURPOSE	EC-18
COMPONENT LAYOUT AND SCHEMATIC DRAWING	EC-19
POSITIVE CRANKCASE VENTILATION (PCV) SYSTEM	EC-20
FUEL EVAPORATIVE EMISSION CONTROL (EVAP) SYSTEM	EC-21
EXHAUST GAS RECIRCULATION (EGR) SYSTEM	EC-24
THREE-WAY CATALYST (TWC) SYSTEM	EC-28

NOTE: TROUBLESHOOTING (See pages EM-6 to 9)

SYSTEM PURPOSE

System	Abbreviation	Purpose
Positive Crankcase ventilation	PCV	Reduces blow-by gas (HC)
Fuel evaporative emission control	EVAP	Reduces evaporative HC
Exhaust gas recirculation	EGR	Reduces Nox
Three-way catalyst	TWC	Reduces HC, CO and NOx
Electronic fuel injection*	EFI	Regulates all engine conditions for reduction of exhaust emissions.

Remarks * For inspection and repair of the EFI system, refer to EFI section of this manual.

COMPONENT LAYOUT AND SCHEMATIC DRAWING

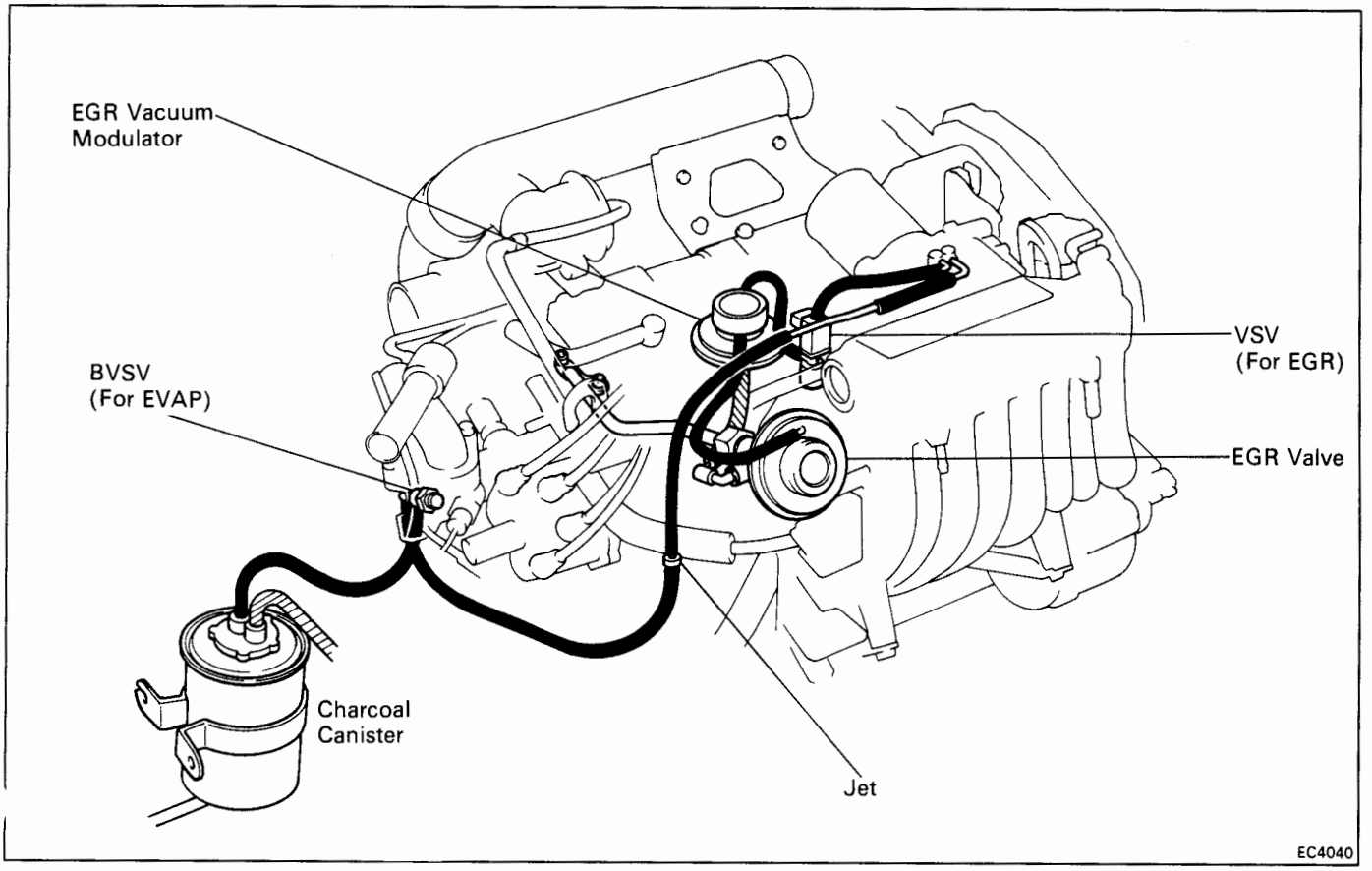

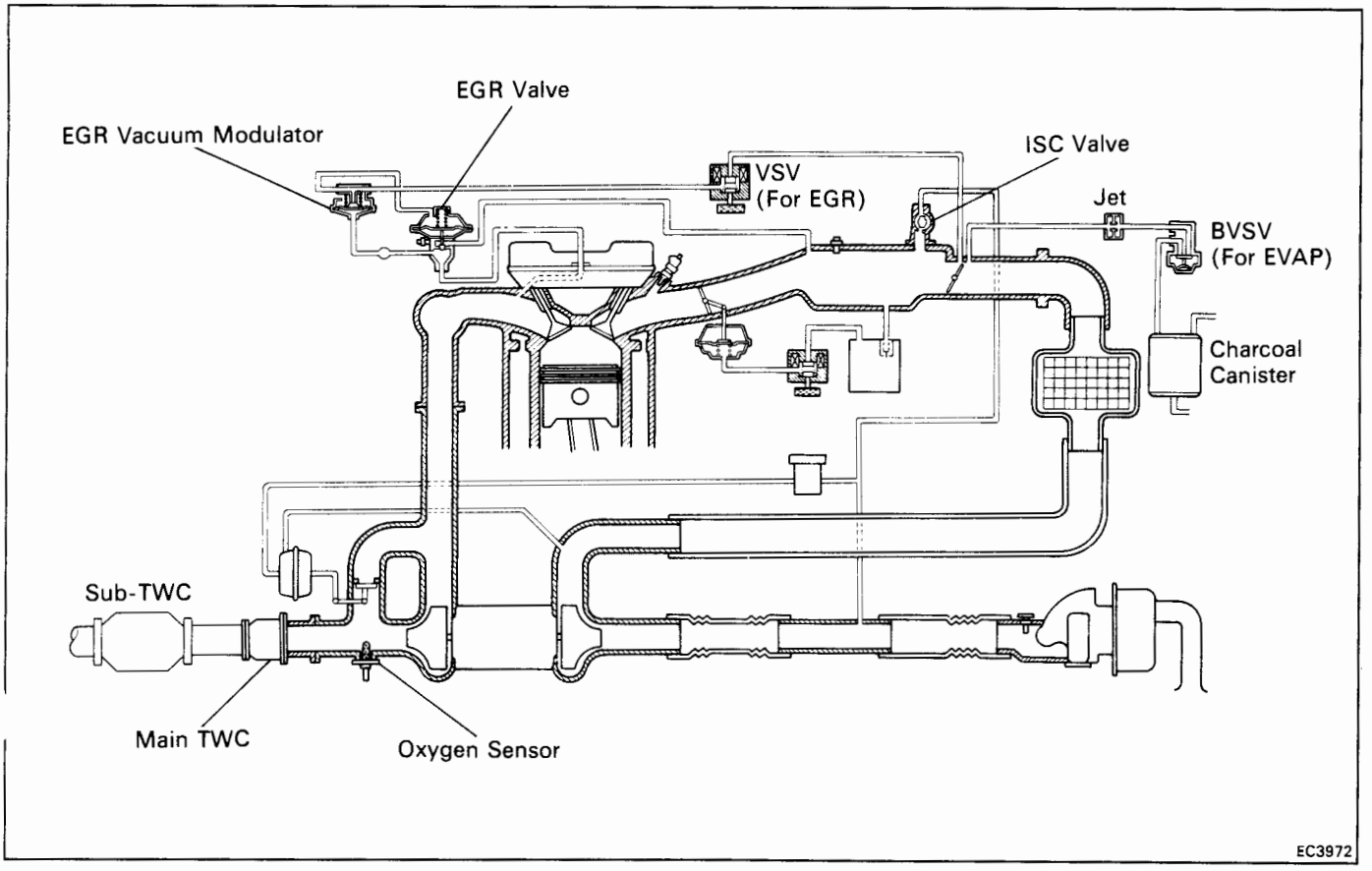

POSITIVE CRANKCASE VENTILATION (PCV) SYSTEM

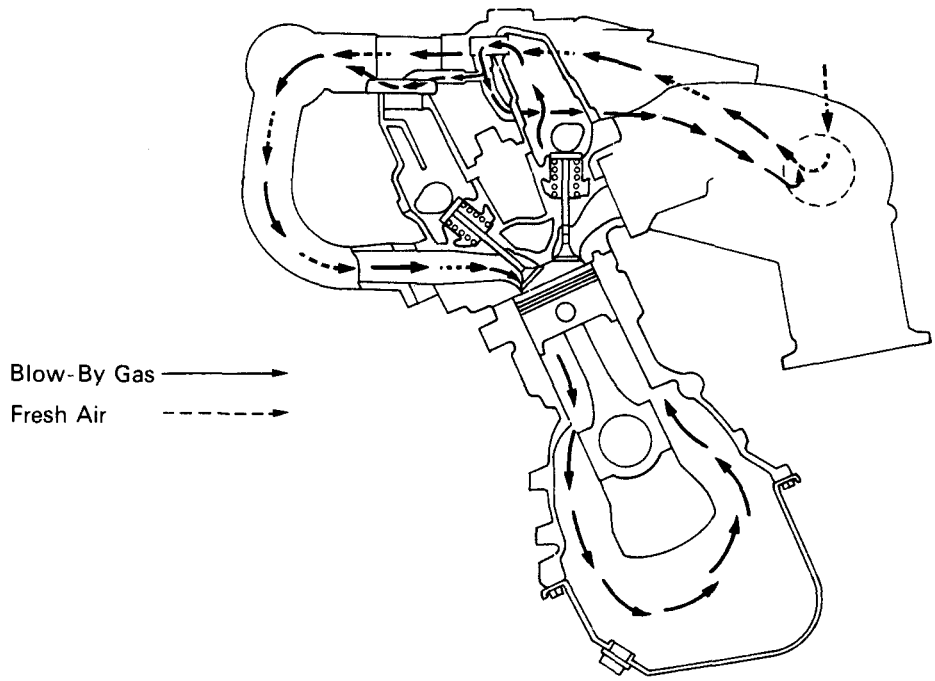

EC2829

To reduce HC emissions, crankcase blow-by gas (HC) is routed to the intake manifold for combustion in the cylinders.

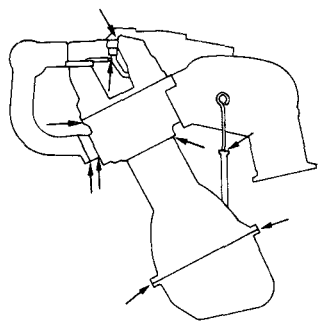

EC3992

INSPECTION OF PCV HOSE AND CONNECTIONS

VISUALLY INSPECT HOSE AND CONNECTIONS

Check for cracks, leaks or damage.

FUEL EVAPORATIVE EMISSION CONTROL (EVAP) SYSTEM

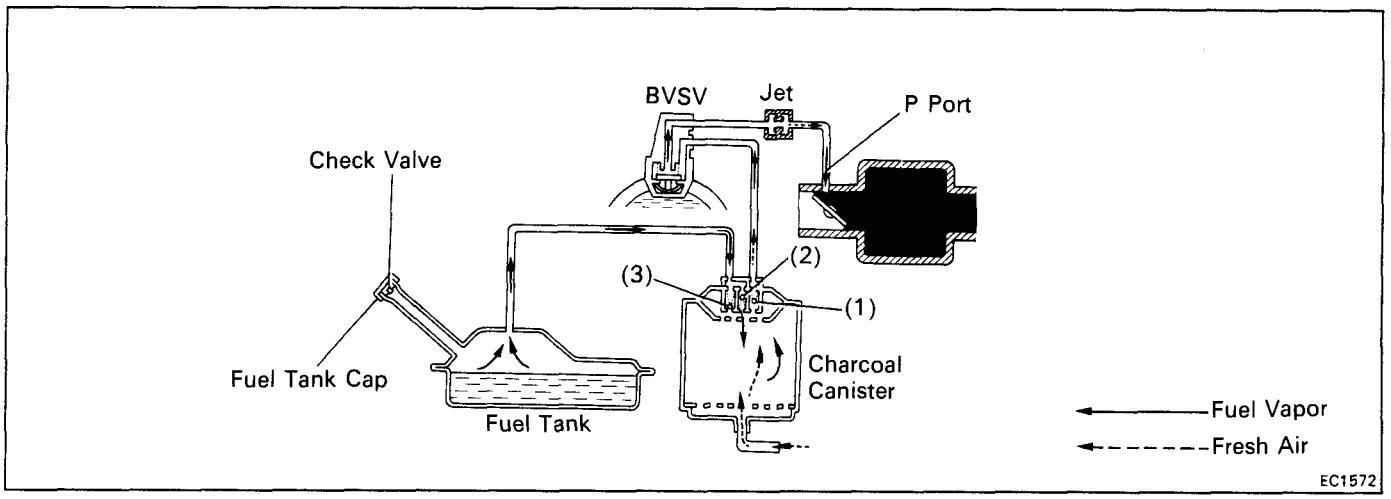

To reduce HC emission, evaporated fuel from the fuel tank is routed through the charcoal canister to the intake manifold for combustion in the cylinders.

Coolant Temp.	BVSV	Throttle Valve Opening	Canister Check Valve			Check valve in Cap	Evaporated Fuel (HC)
			(1)	(2)	(3)		
Below 35°C (95°F)	CLOSED	–	–	–	–	–	HC from tank is absorbed into the canister.
Above 54°C (129°F)	OPEN	Positioned below P port	CLOSED	–	–	–	
		Positioned above P port	OPEN	–	–	–	HC from canister is led into air intake chamber.
High pressure in tank	–	–	–	OPEN	CLOSED	CLOSED	HC from tank is absorbed Into the canister.
High vacuum in take	–	–	–	CLOSED	OPEN	OPEN	Air is led into the fuel tank.

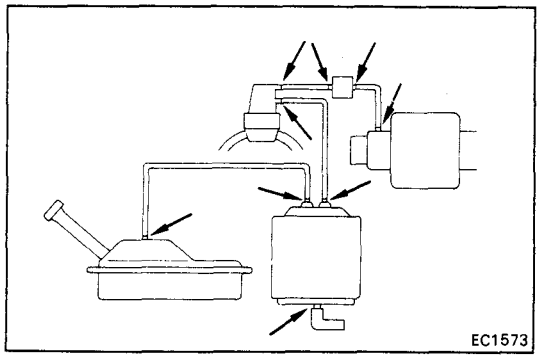

INSPECTION OF FUEL VAPOR LINES, FUEL TANK AND TANK CAP

1. **VISUALLY INSPECT LINES AND CONNECTIONS**
   Look for loose connections, sharp bends or damage.

2. **VISUALLY INSPECT FUEL TANK**
   Look for deformation, cracks or fuel leakage.

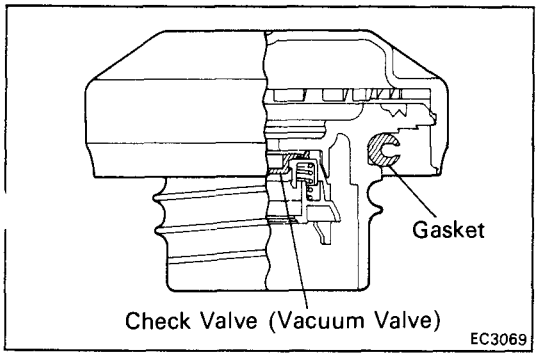

3. **VISUALLY INSPECT FUEL TANK CAP**
   Check if the cap and/or gasket are deformed or damaged.
   If necessary, repair or replace the cap.

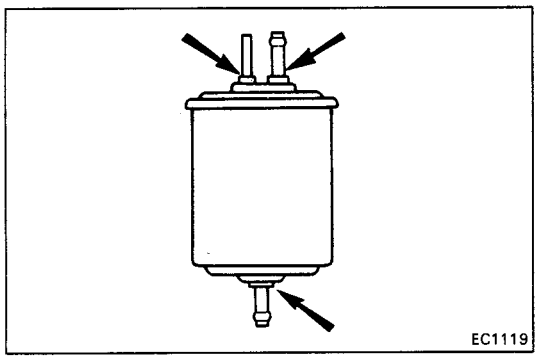

INSPECTION OF CHARCOAL CANISTER

1. **REMOVE CHARCOAL CANISTER**

2. **VISUALLY INSPECT CHARCOAL CANISTER**

   Look for cracks or damage.

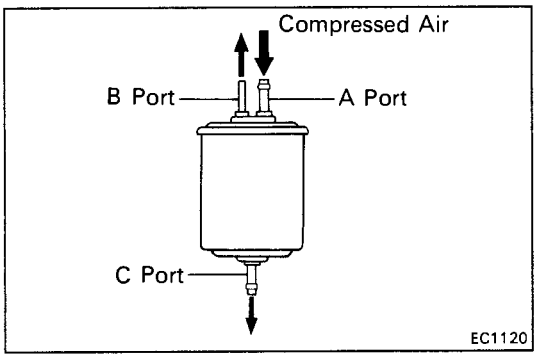

3. **CHECK FOR CLOGGED FILTER AND STUCK CHECK VALVE**

   (a) Using low pressure compressed air, blow into the A port and check that air flows without resistance from the other ports.

   (b) Blow into the B port and check that air does not flow from the other ports.

   If a problem is found, replace the charcoal canister.

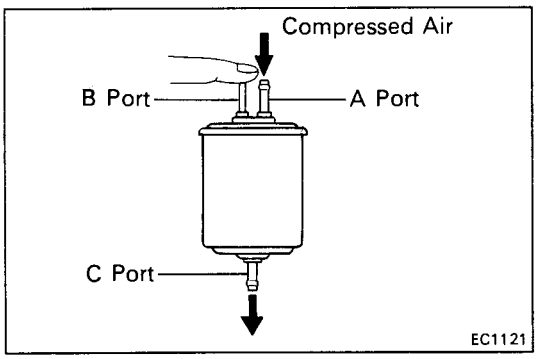

4. **CLEAN FILTER IN CANISTER**

   Clean the filter by blowing 3 kg/cm^2 (43 psi, 294 kPa) of compressed air into the A port while holding the B port closed.

   NOTICE:
   - **Do not attempt to wash the canister.**
   - **No activated carbon should come out.**

5. **REINSTALL CHARCOAL CANISTER**

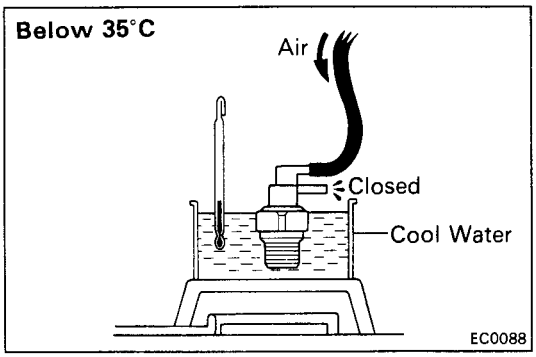

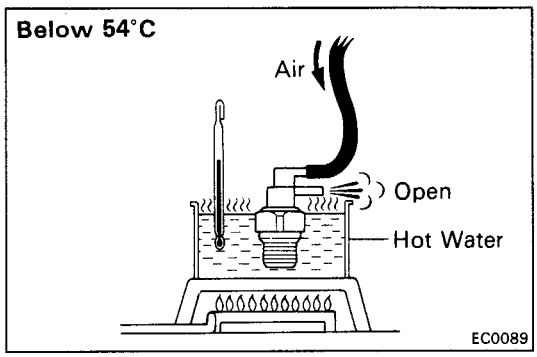

INSPECTION OF BVSV

CHECK BVSV BY BLOWING AIR INTO PIPE

(a) Drain the coolant from the radiator into a suitable container.

(b) Remove the BVSV from the water outlet.

(c) Cool the BVSV to below 35°C (95°F) with cool water.

(d) Blow air into a pipe and check that the BVSV is closed.

(e) Heat the BVSV to above 54°C (129°F) with hot water.

(f) Blow air into a pipe and check that the BVSV is open.

If a problem is found, replace the BVSV.

(g) Apply adhesive to two or three threads of the BVSV, and reinstall.

Adhesive: Part No. 08833-00070, THREE BOND 1324 or equivalent

(h) Refill the radiator with coolant.

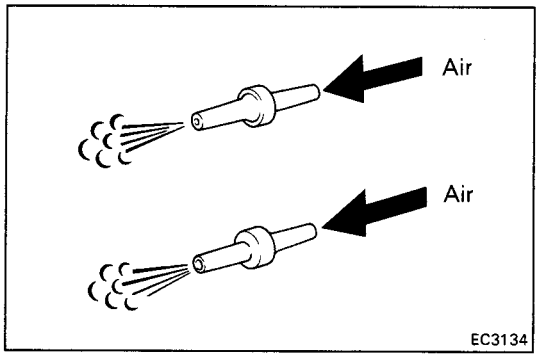

INSPECTION OF JET

1. **INSPECT JET BY BLOWING AIR FROM EACH SIDE**
   Check for stoppage.

EXHAUST GAS RECIRCULATION (EGR) SYSTEM

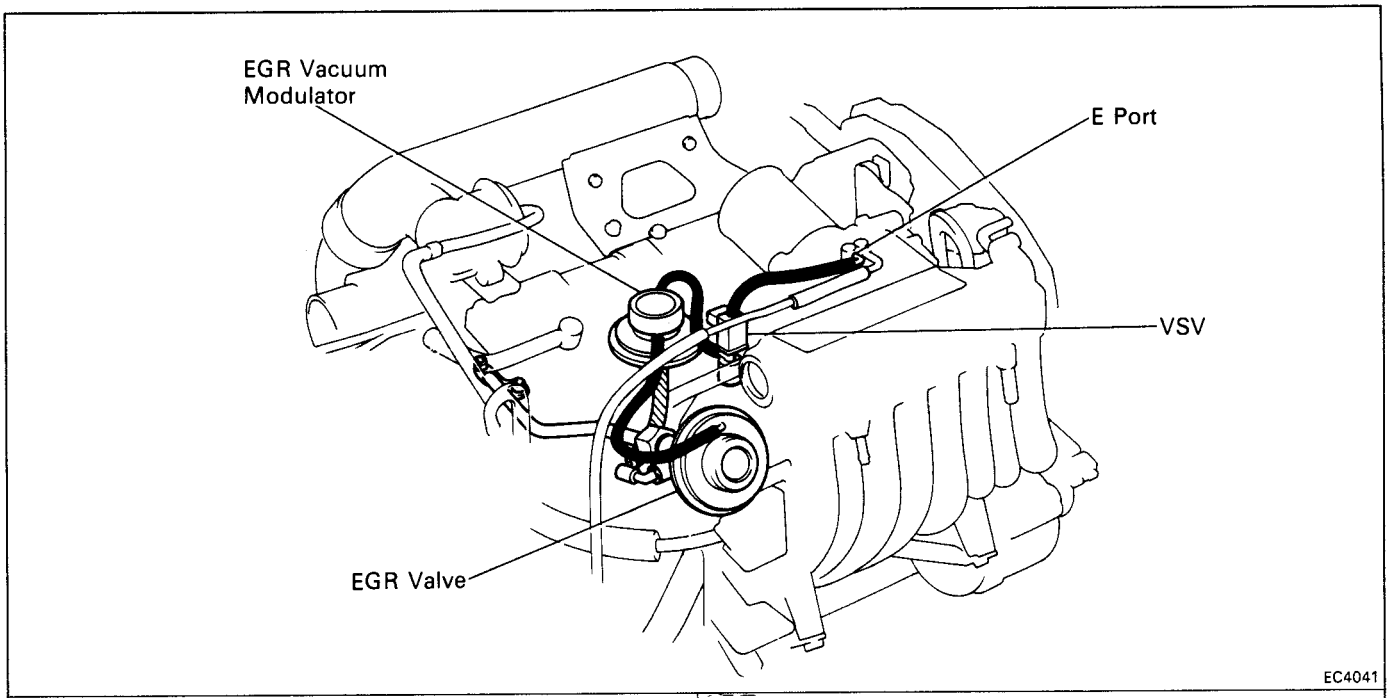

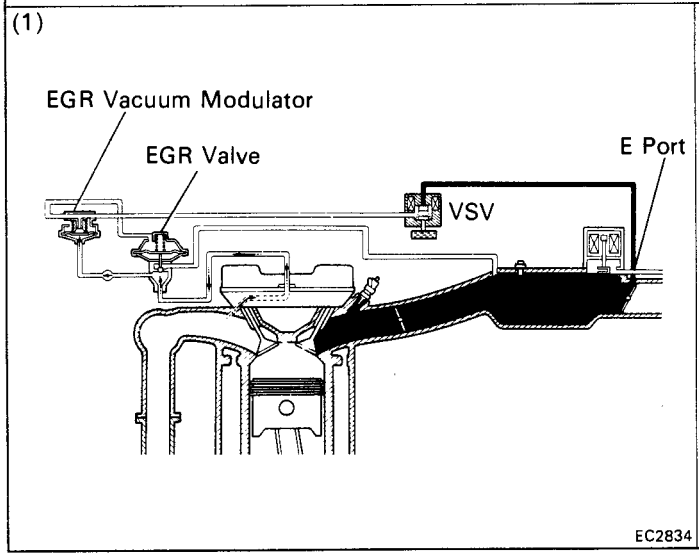

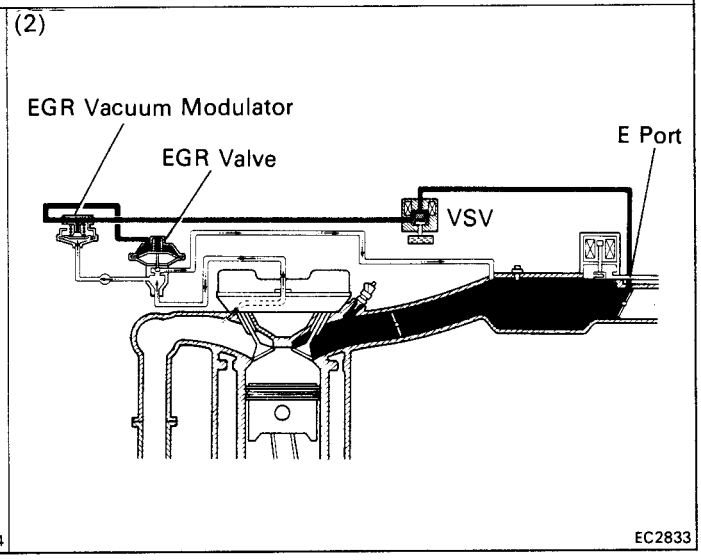

To reduce NOx emissions, part of the exhaust gases are recirculated through the EGR valve to the intake manifold to lower the maximum combustion temperature.

Coolant temp.	VSV	Throttle Valve Opening Angle	Pressure in the EGR Valve Pressure Chamber		EGR Vacuum Modulator	EGR Valve	Exhaust Gas
Below 54°C (129°F)	CLOSED	–	–		–	CLOSED	Not recirculated
Above 60°C (140°F)	OPEN	Positioned above E port	(1)	–	–	CLOSED	Not recirculated
		Positioned below E port	(2)	*	CLOSED passage to atmosphere	OPEN	Recirculated (increase)

Remarks: * When the throttle valve is positioned above the E port, the EGR vacuum modulator will close the atmosphere passage and open the EGR valve to increase the EGR gas, even if the exhaust pressure is insufficiently low.

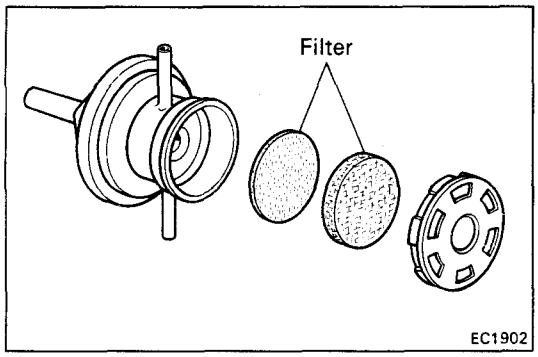

INSPECTION OF EGR SYSTEM

1. CHECK AND CLEAN FILTERS IN EGR VACUUM MODULATOR

(a) Check the filters for contamination or damage.

(b) Using compressed air, clean the filters.

HINT: Install the filters with the coarser surface facing the atmospheric side (outward).

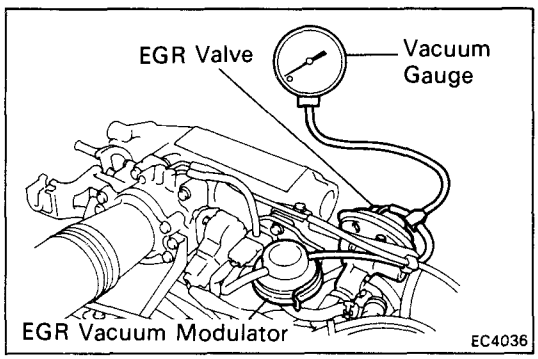

2. PREPARATION

Using a 3-way connector, connect a vacuum gauge to the hose between the EGR valve and vacuum modulator.

3. CHECK SEATING OF EGR VALVE

Start the engine and check that the engine starts and runs at idle.

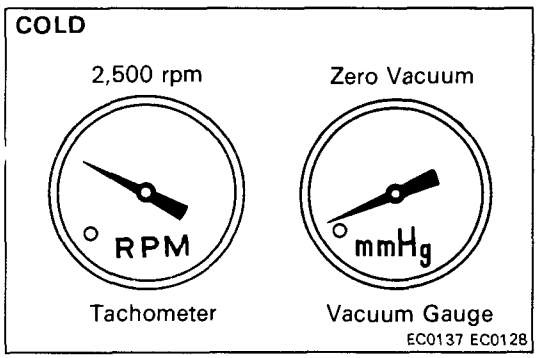

4. CHECK VSV WITH COLD ENGINE

(a) The coolant temperature should be below 54°C (129°F).

(b) Check that the vacuum gauge indicates zero vacuum at 2,500 rpm.

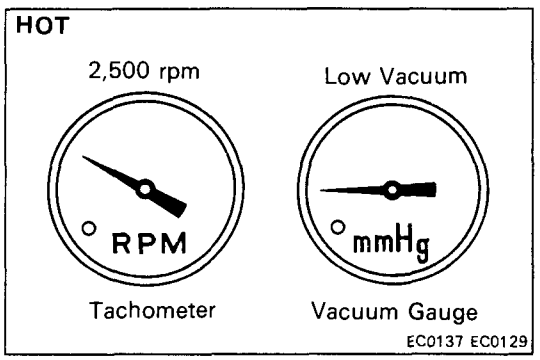

5. CHECK VSV WITH HOT ENGINE

(a) Warm up the engine.

(b) Check that the vacuum gauge indicates low vacuum at 2,500 rpm.

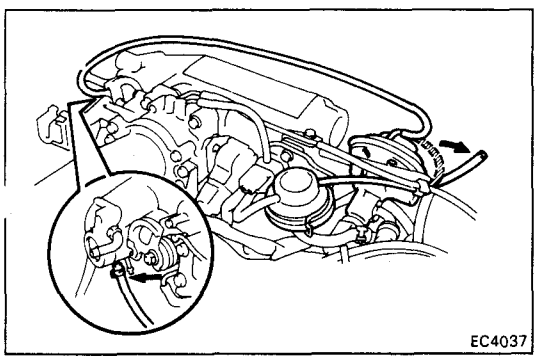

6. CHECK EGR VALVE

(a) Apply vacuum directly to the EGR valve with the engine idling.

(b) Check that the engine runs rough or dies.

(c) Reconnect the vacuum hoses to the proper locations.

IF NO PROBLEM IS FOUND WITH THIS INSPECTION, SYSTEM IS NORMAL; OTHERWISE INSPECT EACH PART

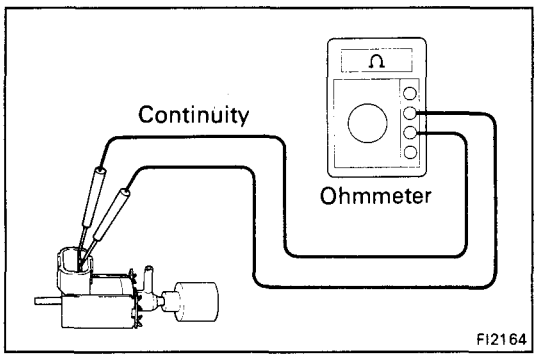

INSPECTION OF VSV

1. CHECK VSV FOR OPEN CIRCUIT

Using an ohmmeter, check that there is conitnuity between the terminals.

Resistance (Cold): 33 – 39 Ω

If there is no continuity, replace the VSV.

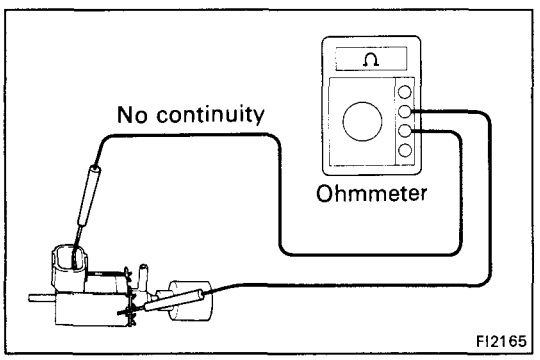

2. CHECK VSV FOR GROUND

Using an ohmmeter, check that there is no conitnuity between each terminal and the body.

If there is continuity, replace the VSV.

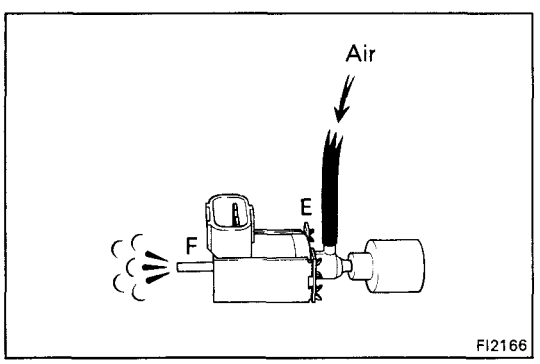

3. CHECK VSV OPERATION

(a) Check that air flows from ports E to F.

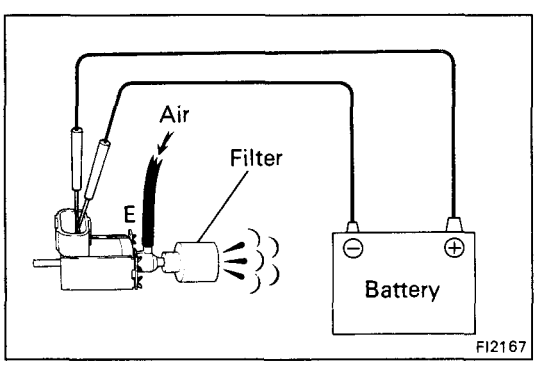

(b) Apply battery voltage across the terminals.

(c) Check that air flows from port E to the filter.

If operation is not as specified, replace the VSV.

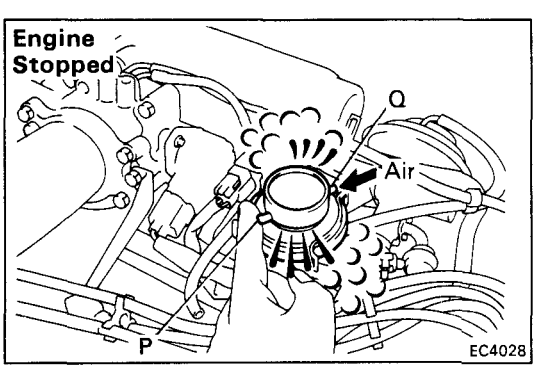

INSPECTION OF EGR VACUUM MODULATOR

CHECK EGR VACUUM MODULATOR OPERATION

(a) Disconnect the vacuum hoses from ports P and Q of the EGR vacuum modulator.

(b) Block port one side with your finger.

(c) Blow air into another port, and check that the air passes through to the air filter side freely.

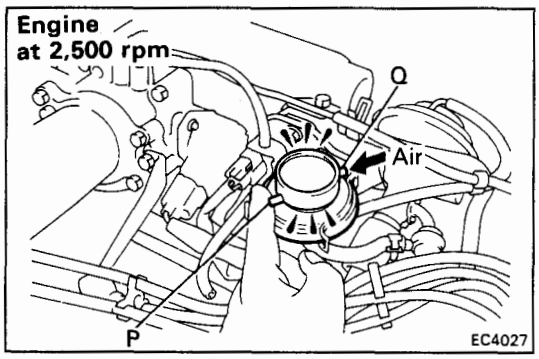

(d) Start the engine, and maintain speed at 2,500 rpm.

(e) Repeat the above test. Check that there is a strong resistance to air flow.

(f) Reconnect the vacuum hoses to the proper locations.

INSPECTION OF EGR VALVE

1. REMOVE EGR VALVE

Check for sticking and heavy carbon deposits.

If a problem is found, replace the valve.

2. REINSTALL EGR VALVE

Install a new gasket.

THREE-WAY CATALYST (TWC) SYSTEM

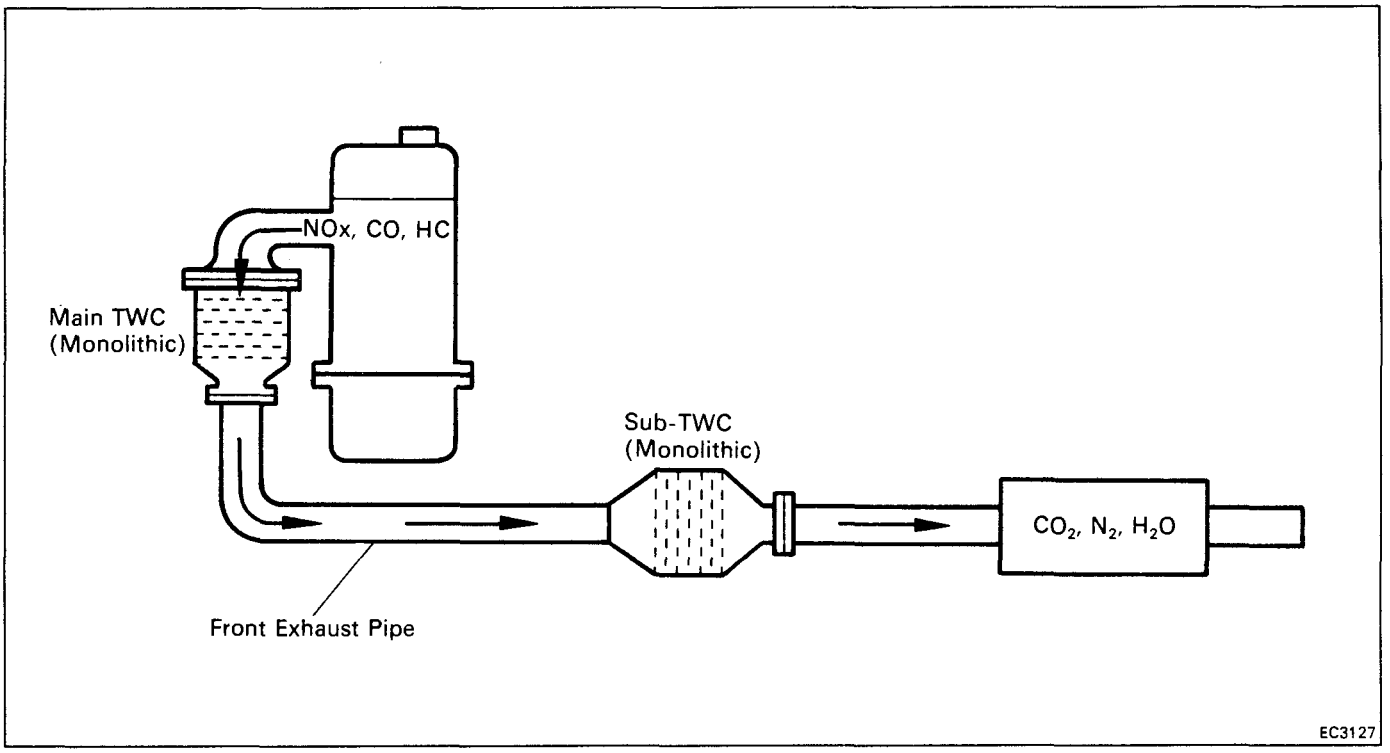

To reduce HC, CO and NOx emissions, they are oxidized, reduced and converted to nitrogen (N_2), carbon dioxide (CO_2) and water (H_2O) by the catalyst.

Exhaust Port		Main TWC		Sub-TWC		Exhaust Gas
HC, CO AND NOx	⇨	OXIDATION AND REDUCTION	⇨	OXIDATION AND REDUCTION	⇨	CO_2 H_2O N_2

INSPECTION OF EXHAUST PIPE ASSEMBLY

1. **CHECK CONNECTIONS FOR LOOSENESS OR DAMAGE**
2. **CHECK CLAMPS FOR WEAKNESS, CRACKS OR DAMAGE**

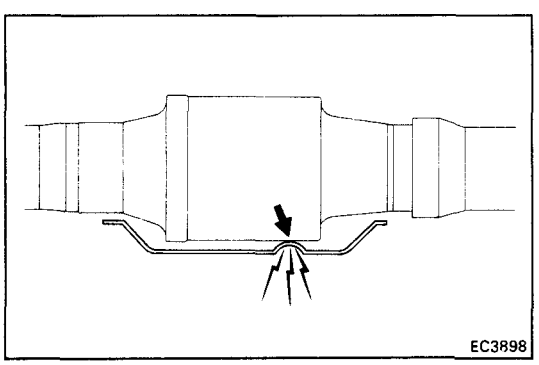

INSPECTION OF CATALYTIC CONVERTER (Sub-Catalytic Converter)

CHECK FOR DENTS OR DAMAGE

If any part of protector is damaged or dented to the extent that it contacts the converter, repair or replace it.

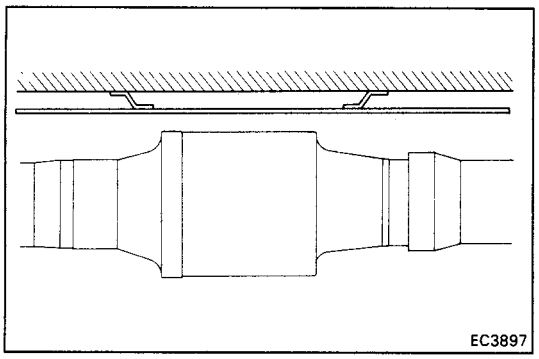

INSPECTION OF HEAT INSULATOR

(Sub-Catalytic Converter)

1. **CHECK HEAT INSULATOR FOR DAMAGE**
2. **CHECK FOR ADEQUATE CLEARANCE BETWEEN CATALYTIC CONVERTER AND HEAT INSULATOR**

REPLACEMENT OF CATALYTIC CONVERTERS

(Main Catalytic Converter)

1. **DISCONNECT CABLE FROM NEGATIVE TERMINAL OF BATTERY**

   CAUTION: Work must be started after approx. 20 seconds or longer from the time the ignition switch is turned to the "LOCK" position and the negative (–) terminal cable is disconnected from the battery.

2. **REMOVE ENGINE UNDER COVERS**
3. **REMOVE NO.1 AND NO.2 AIR INTAKE CONNECTORS (See steps 10 and 11 on page EM-134)**
4. **REMOVE TAILPIPE (See step 1 on page EC-15)**
5. **REMOVE FRONT EXHAUST PIPE (See step 2 on page EC-16)**
6. **REMOVE IDLER PULLEY BRACKET AND A/C COMPRESSOR WITHOUT DISCONNECTING HOSES (See step 33 on pages EM-139 and 140)**
7. **REMOVE MAIN CATALYTIC CONVERTER**
   (a) Check that the converter is cool.
   (b) Remove the four bolts and RH converter stay.

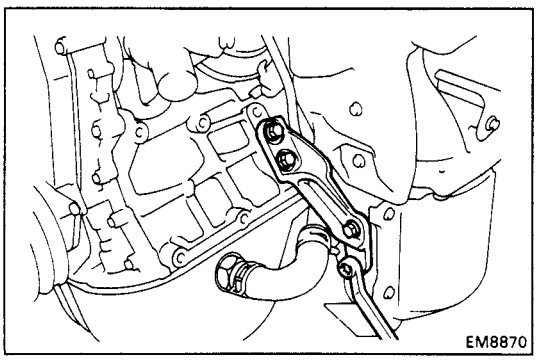

   (c) Remove the three bolts and LH converter stay.

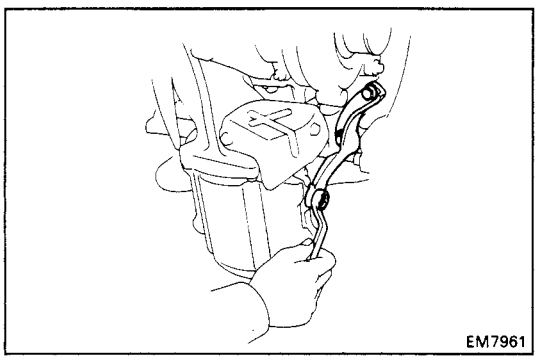

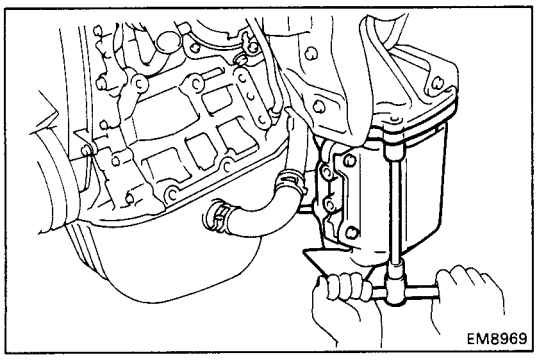

(d) Remove the three bolts, two nuts, converter, gasket, retainer and cushion.

(e) Remove the nine bolts and two heat insulator from the converter.

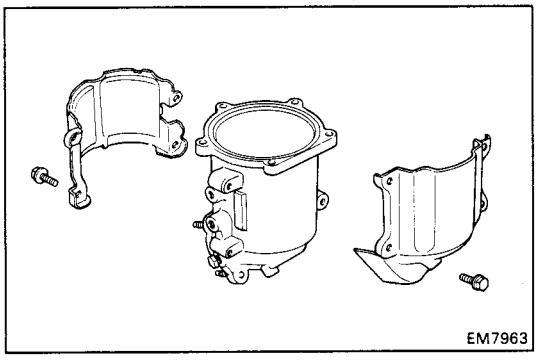

8. REINSTALL MAIN CATALYTIC CONVERTER

(a) Install the two heat insulators to a new converter with the nine bolts.

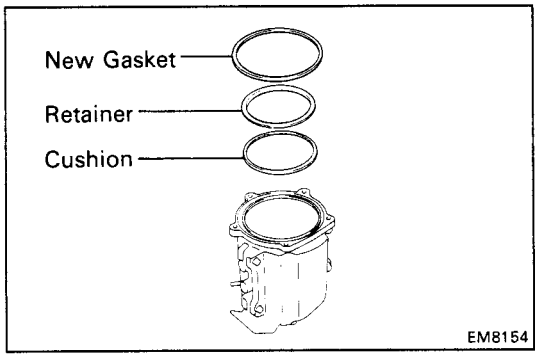

(b) Place the cushion, retainer and a new gasket on the converter.

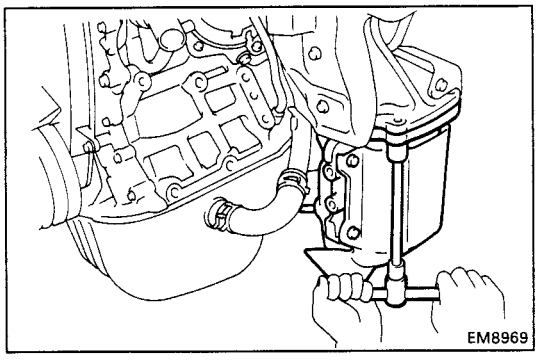

(c) Install the converter with the three bolts and two new nuts.

Torque: 300 kg-cm (21 ft-lb, 29 N·m)

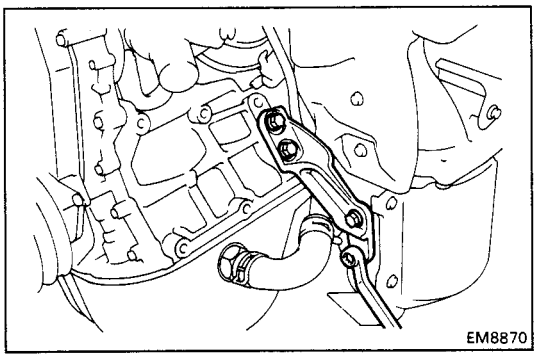

(d) Install the RH converter stay with the four bolts.

Torque: 600 kg-cm (43 ft-lb, 59 N·m)

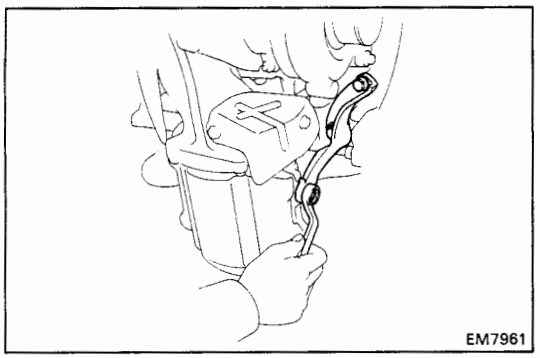

(e) Install the LH converter stay with the three bolts.

Torque: 600 kg-cm (43 ft-lb, 59 N·m)

9. **REINSTALL IDLER PULLEY BRACKET AND A/C COMPRESSOR WITHOUT DISCONNECTING HOSES (See step 16 on pages EM-173 and 174)**

10. **REINSTALL FRONT EXHAUST PIPE (See step 3 on page EC-17)**

11. **REINSTALL TAILPIPE (See step 4 on page EC-18)**

12. **REINSTALL NO.1 AND NO.2 AIR INTAKE CONNECTORS (See steps 38 and 39 on page EM-179)**

13. **REINSTALL ENGINE UNDER COVERS**

14. **CONNECT CABLE TO NEGATIVE TERMINAL OF BATTERY**

(Sub-Catalytic Converter)

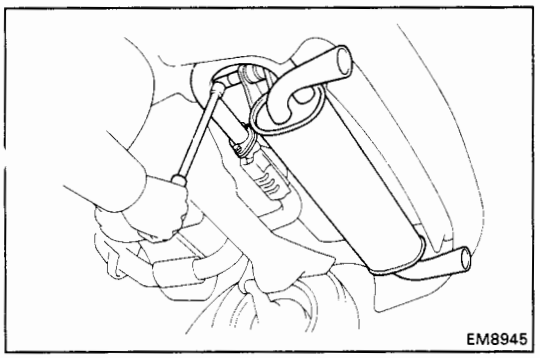

1. **REMOVE TAILPIPE**

   (a) Remove the two bolts holding the front exhaust pipe to the tailpipe stopper bracket.

   (b) Remove the two bolts holding the front exhaust pipe to the tailpipe. Remove the gasket.

   (c) Remove the two through bolts and tailpipe.

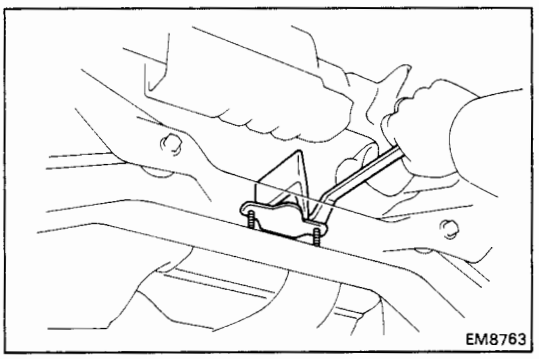

2. **REMOVE FRONT EXHAUST PIPE (SUB-CATALYTIC CONVERTER)**

   (a) Remove the two bolts and damper.

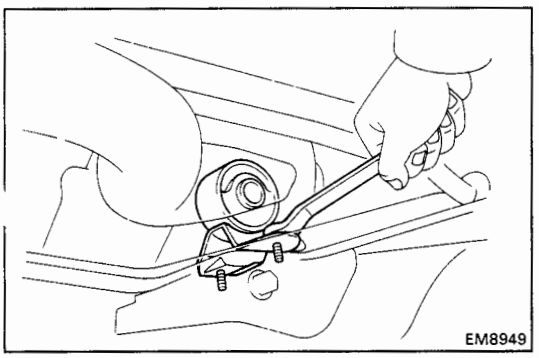

   (b) Remove the two bolts and support bracket.

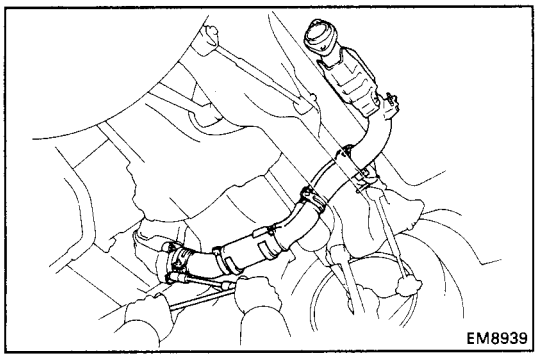

(c) Using a 14 mm deep socket wrench, remove the three nuts, front exhaust pipe and gasket.

HINT: Passing the exhaust pipe rear side between the body and suspension crossmember is not easy, so follow the method in the illustration.

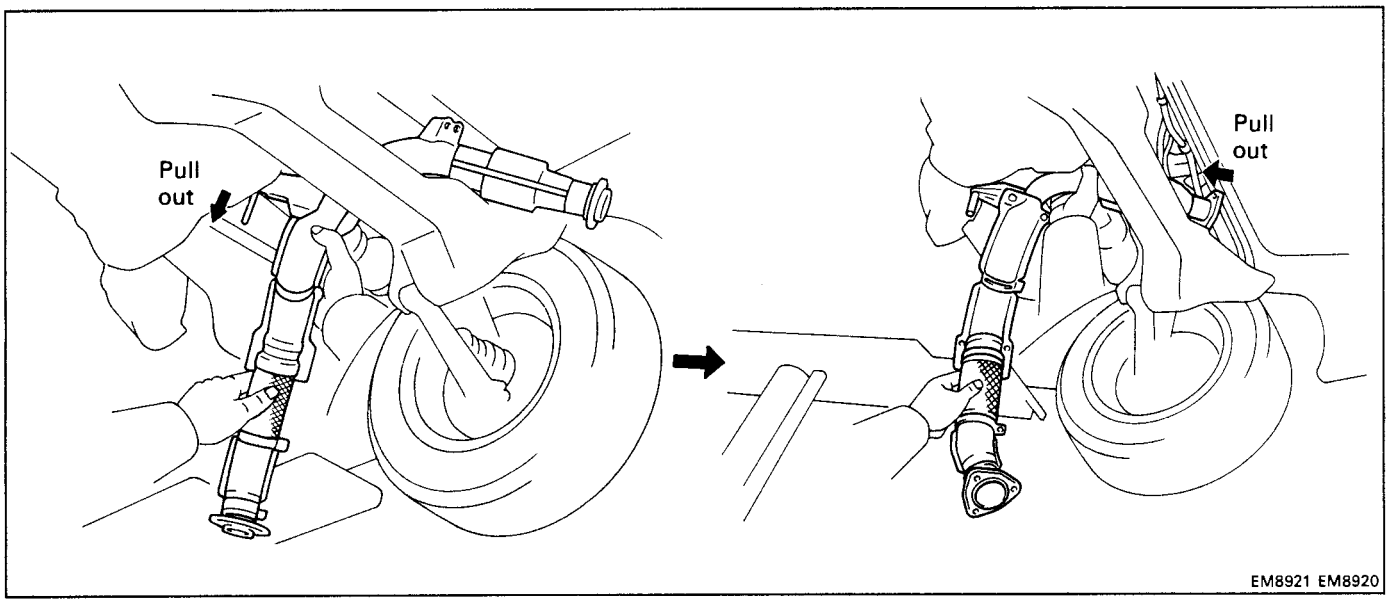

3. REINSTALL FRONT EXHAUST PIPE (SUB-CATALYTIC CONVERTER)

HINT: Passing the exhaust pipe rear side between the body and suspension crossmember is not easy, so follow the method in the illustration.

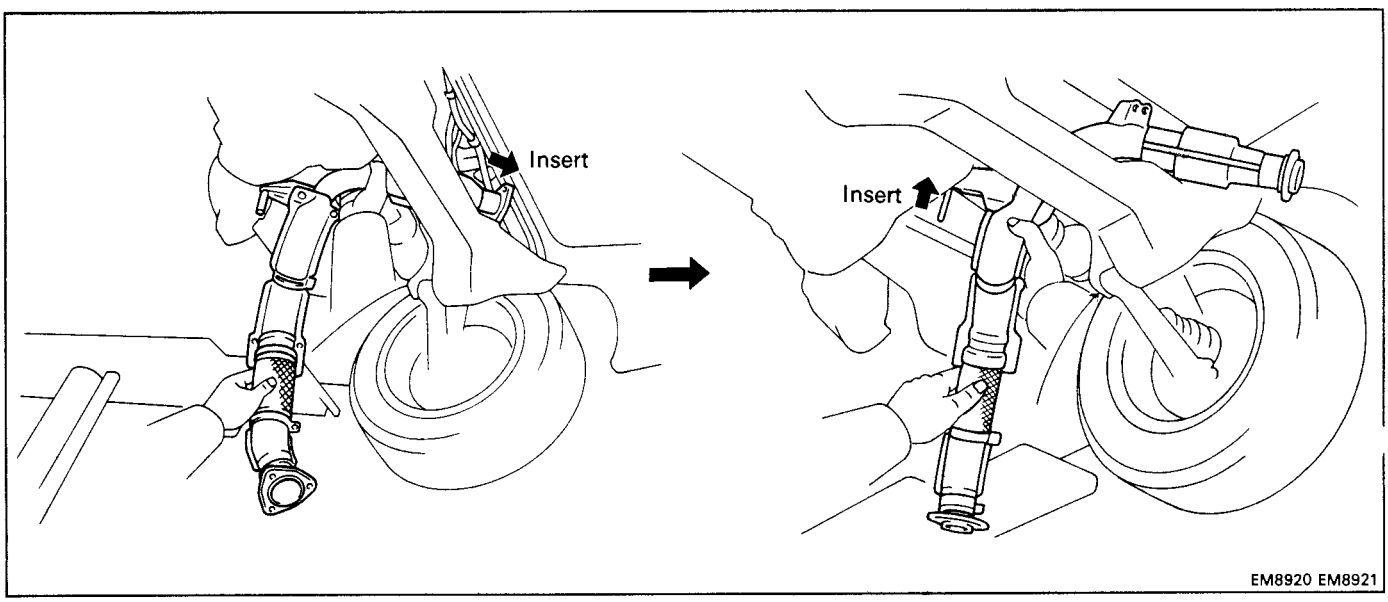

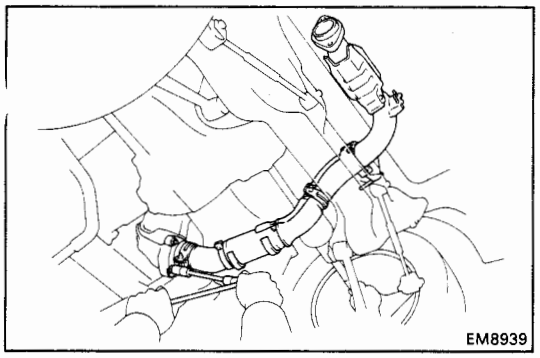

(a) Place a new gasket on the front of the front exhaust pipe.

(b) Using a 14 mm deep socket wrench, install the front exhaust pipe with three new nuts.

Torque: 630 kg-cm (46 ft-lb, 62 N·m)

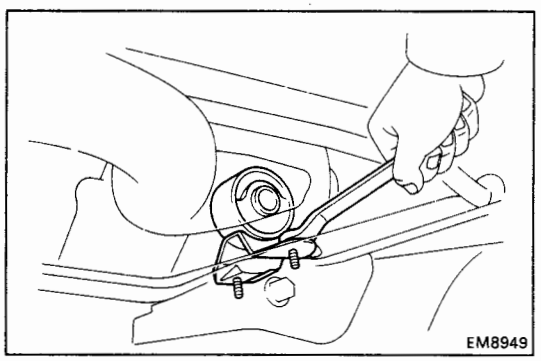

(c) Install the support bracket with the two bolts.

Torque: 210 kg-cm (15 ft-lb, 21 N·m)

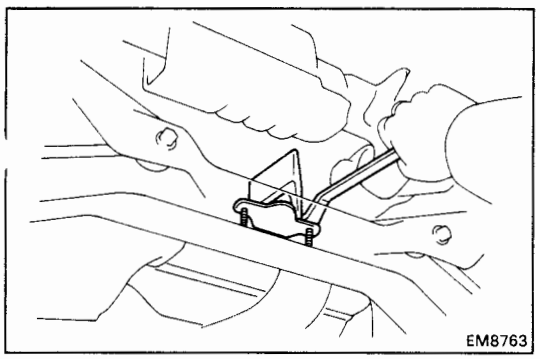

(d) Install the damper with the two bolts.

Torque: 210 kg-cm (15 ft-lb, 21 N·m)

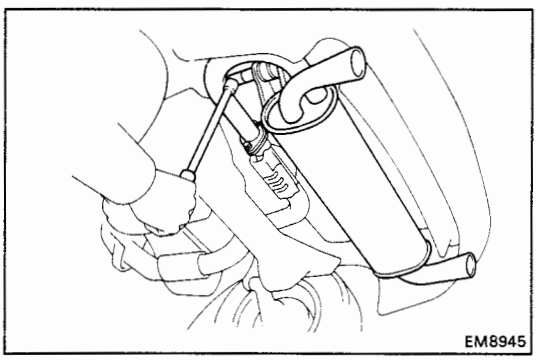

4. INSTALL TAILPIPE

(a) Install the tailpipe with the two through bolts.

Torque: 670 kg-cm (48 ft-lb, 66 N·m)

(b) Place a new gasket between the exhaust pipe and tailpipe.

(c) Temporarily install the two bolts holding the front exhaust pipe to the tailpipe.

(d) Install the two bolts holding the stopper bracket of the front exhaust pipe to the tailpipe stopper bracket.

Torque: 190 kg-cm (14 ft-lb, 19 N·m)

(e) Tighten the two bolts holding the front exhaust pipe to the tail pipe.

Torque: 440 kg-cm (32 ft-lb, 43 N·m)

SYSTEM PURPOSE

System	Abbreviation	Purpose
Positive Crankcase ventilation	PCV	Reduces blow-by gas (HC)
Fuel evaporative emission control	EVAP	Reduces evaporative HC
Exhaust gas recirculation	EGR	Reduces NOx
Three-way catalyst	TWC	Reduces HC, CO and NOx
Electronic fuel injection*	EFI	Regulates all engine conditions for reduction of exhaust emissions.

Remarks * For inspection and repair of the EFI system, refer to EFI section of this manual.

COMPONENT LAYOUT AND SCHEMATIC DRAWING

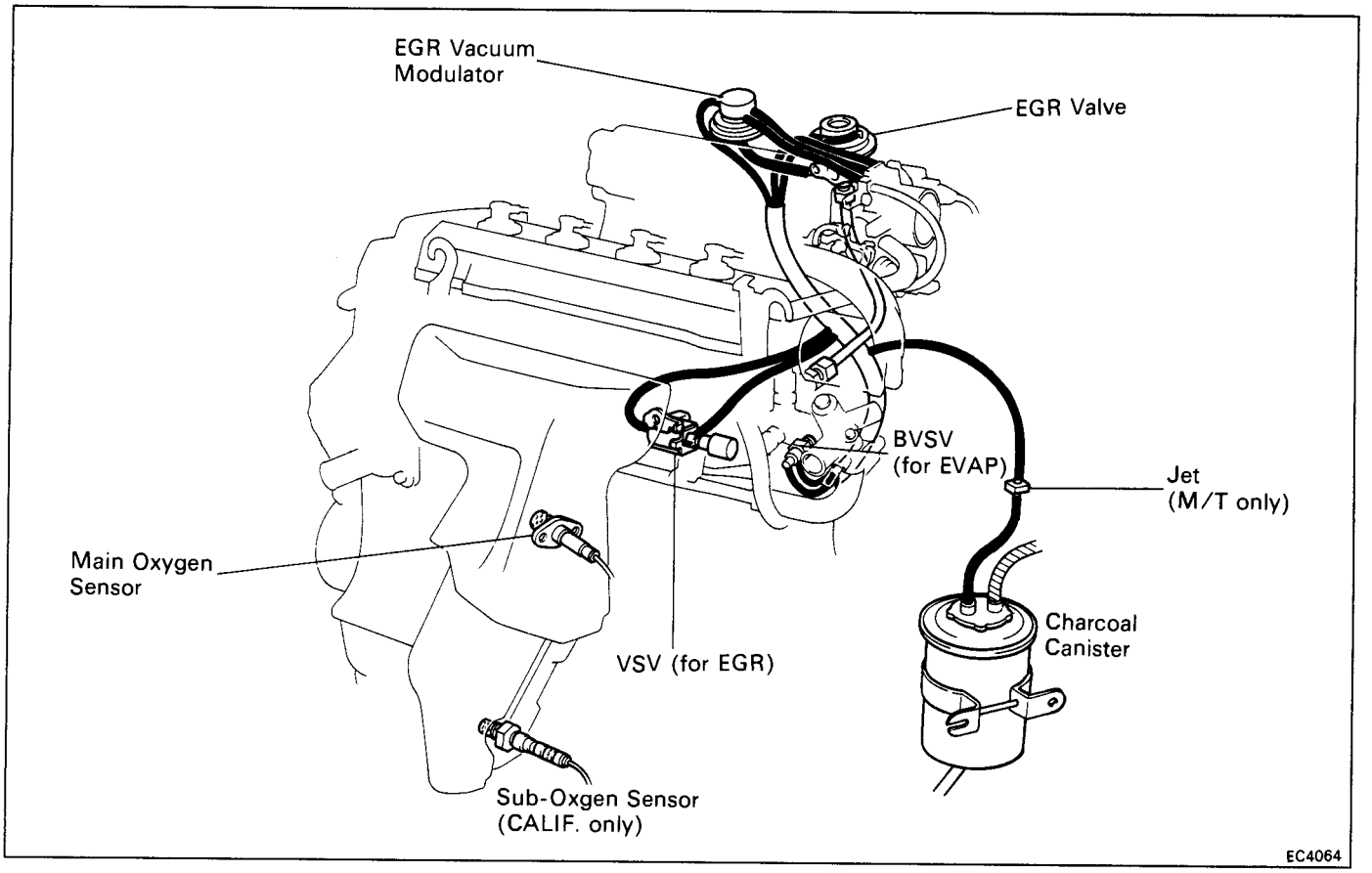

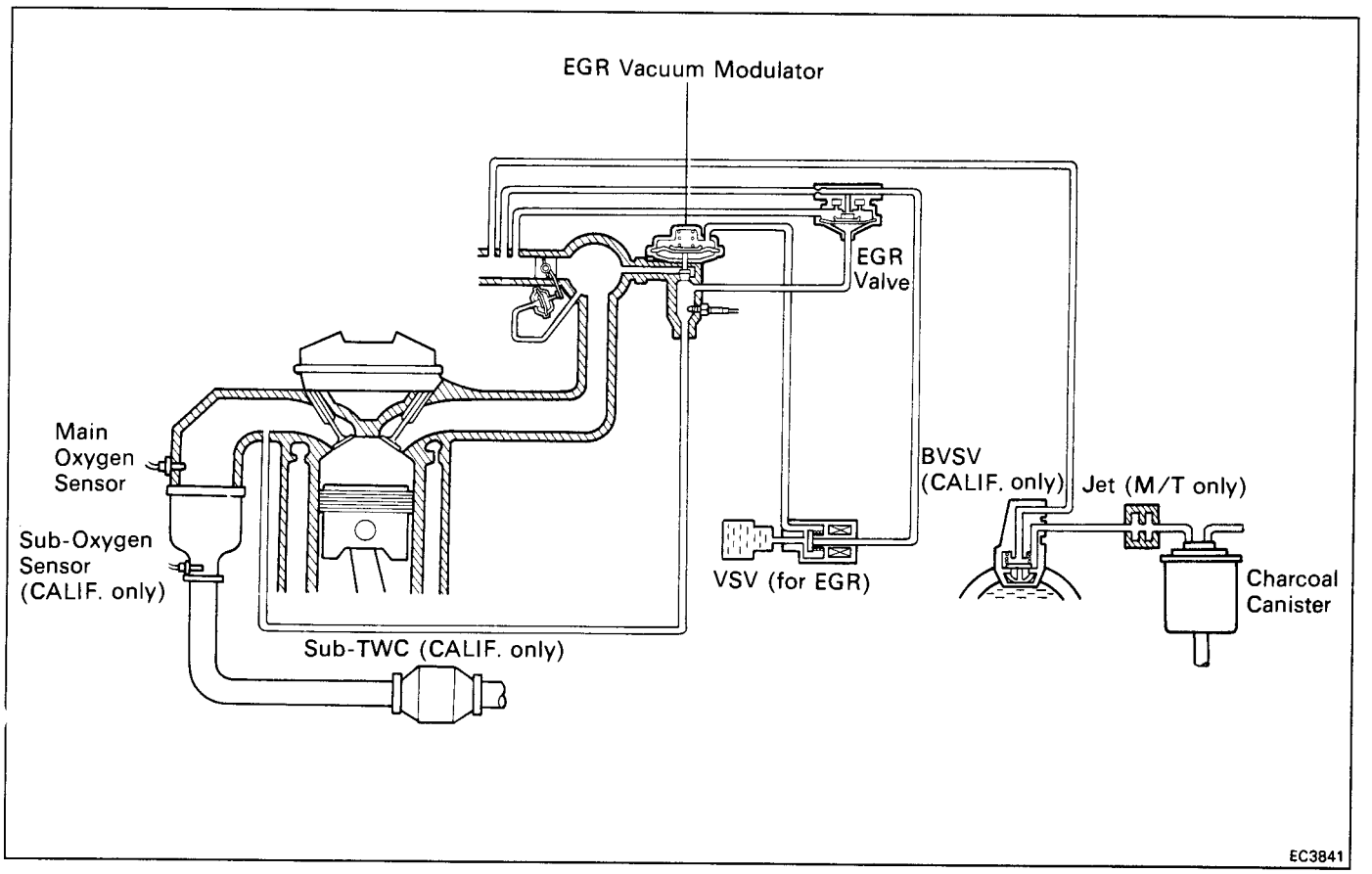

POSITIVE CRANKCASE VENTILATION (PCV) SYSTEM

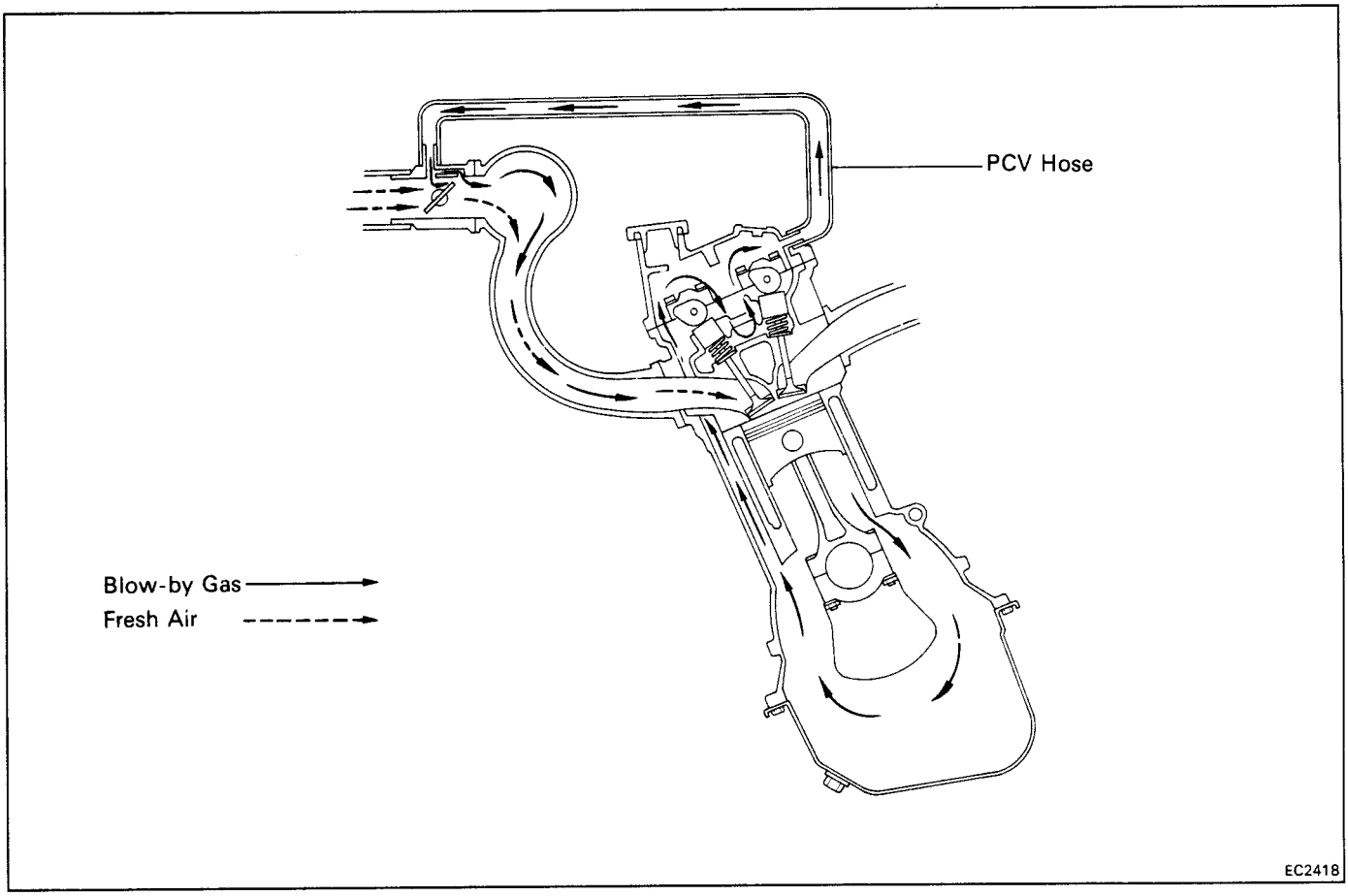

To reduse HC emission, crankcase blow-by gas (HC) is routed to the intake manifold for combustion in the cylinders.

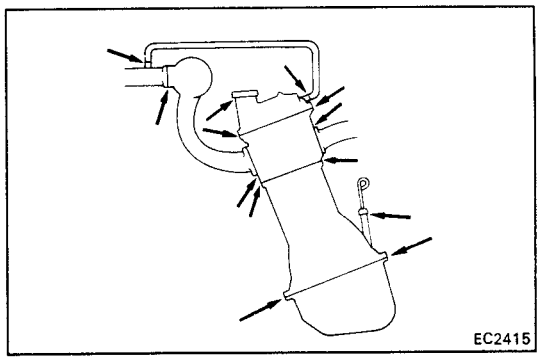

INSPECTION OF PCV HOSE AND CONNECTIONS

VISUALLY INSPECT HOSE AND CONNECTIONS

Check for cracks, leaks or damage.

FUEL EVAPORATIVE EMISSION CONTROL (EVAP) SYSTEM

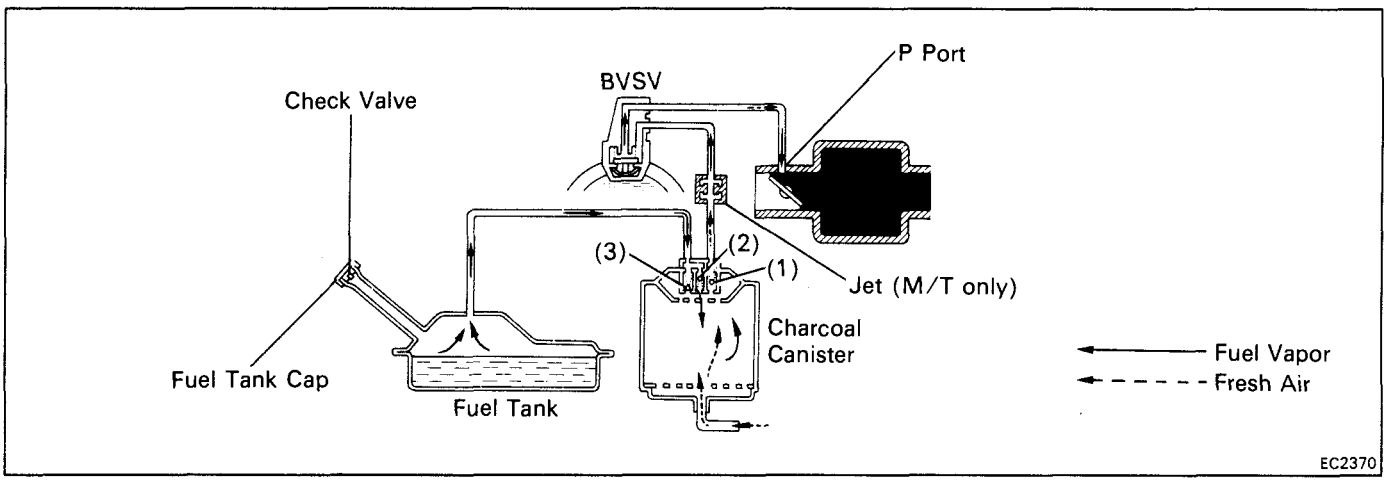

To reduce HC emission, evaporated fuel from the fuel tank is routed through the charcoal canister to the intake manifold for combustion in the cylinders.

Coolant Temp.	BVSV	Throttle Valve Opening	Canister Check Valve			Check Valve in Cap	Evaporated Fuel (HC)
			(1)	(2)	(3)		
Below 35°C (95°F)	CLOSED	–	–	–	–	–	HC from tank is absorbed into the canister.
Above 54°C (129°F)	OPEN	Positioned below P Port	CLOSED	–	–	–	
		Positioned above P Port	OPEN	–	–	–	HC from canister is led into air intake canister.
High pressure in tank	–	–	–	OPEN	CLOSED	CLOSED	HC from tank is absorbed into the canister.
High vacuum intake	–	–	–	CLOSED	OPEN	OPEN	Air is led into the fuel tank.

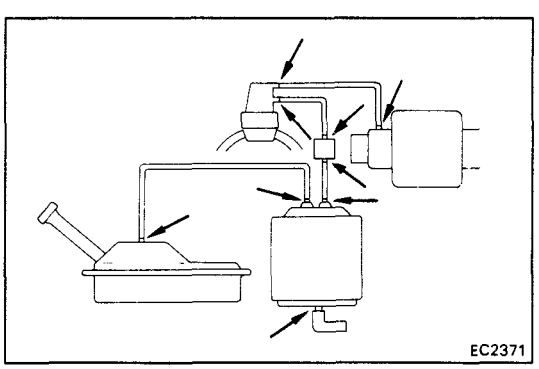

INSPECTION OF FUEL VAPOR LINES, FUEL TANK AND TANK CAP

1. **VISUALLY INSPECT LINES AND CONNECTIONS**
   Look for loose connections, sharp bends or damage.

2. **VISUALLY INSPECT FUEL TANK**
   Look for deformation, cracks or fuel leakage.

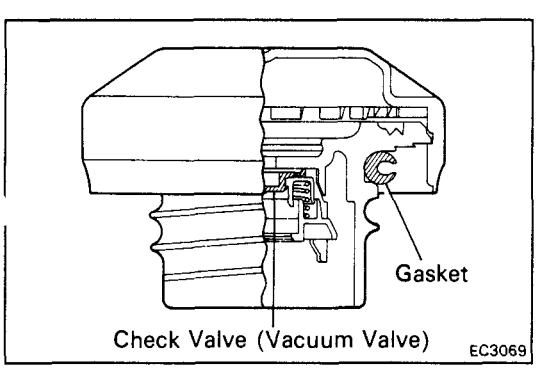

3. **VISUALLY INSPECT FUEL TANK CAP**
   Check if the cap and/or gasket are deformed or damaged.
   If necessary, repair or replace the cap.

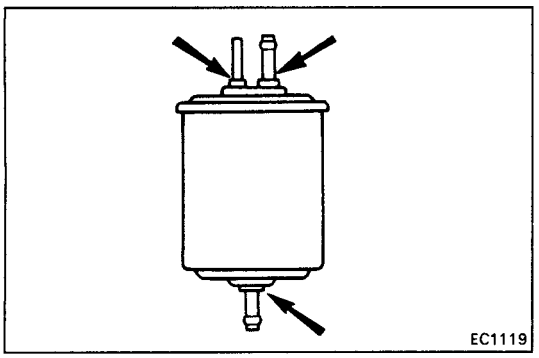

INSPECTION OF CHARCOAL CANISTER

1. **REMOVE CHARCOAL CANISTER**

2. **VISUALLY INSPECT CHARCOAL CANISTER**

   Look for cracks or damage.

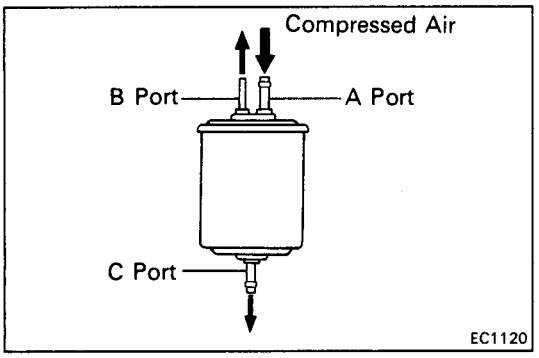

3. **CHECK FOR CLOGGED FILTER AND STUCK CHECK VALVE**

   (a) Using low pressure compressed air, blow into the A port and check that air flows without resistance from the other ports.

   (b) Blow into the B port and check that air does not flow from the other ports.

   If a problem is found, replace the charcoal canister.

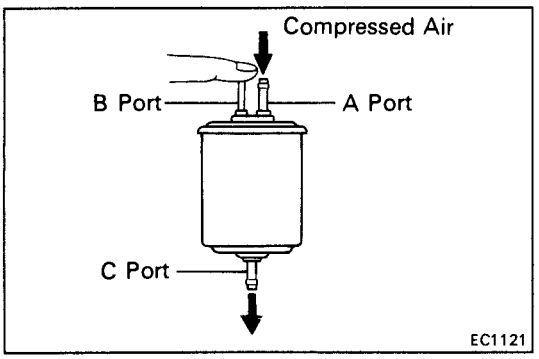

4. **CLEAN FILTER IN CANISTER**

   Clean the filter by blowing 3 kg/cm^2 (43 psi, 294 kPa) of compressed air into the A port while holding the B port closed.

   NOTICE:
   - **Do not attempt to wash the canister.**
   - **No activated carbon should come out.**

5. **REINSTALL CHARCOAL CANISTER**

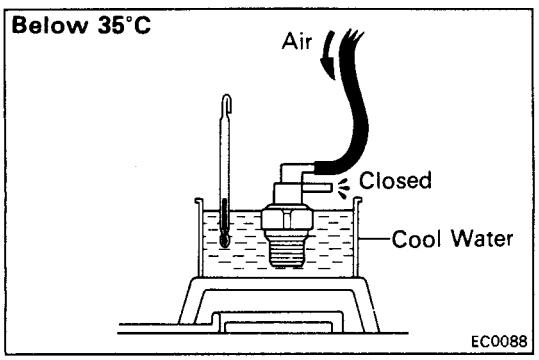

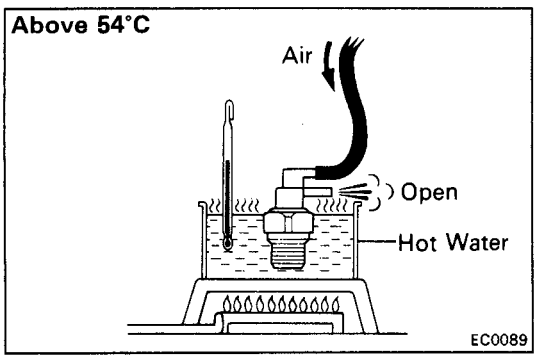

INSPECTION OF BVSV

CHECK BVSV BY BLOWING AIR INTO PIPE

(a) Drain the coolant from the radiator into a suitable container.

(b) Remove the BVSV from the water outlet.

(c) Cool the BVSV to below 35°C (95°F) with cool water.

(d) Blow air into a pipe and check that the BVSV is closed.

(e) Heat the BVSV to above 54°C (129°F) with hot water.

(f) Blow air into a pipe and check that the BVSV is open.

If a problem is found, replace the BVSV.

(g) Apply adhesive to two or three threads of the BVSV, and reinstall.

Adhesive: Part No. 08833-00070, THREE BOND 1324 or equivalent

(h) Refill the radiator with coolant.

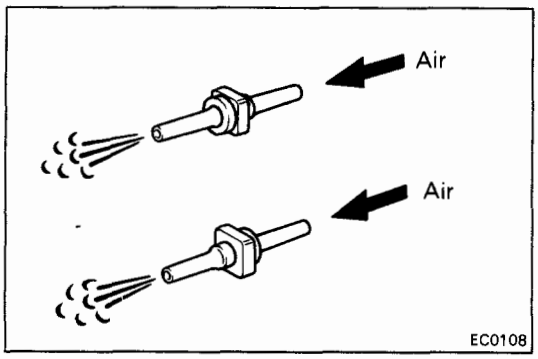

INSPECTION OF JET (M/T only)

1. **INSPECT JET BY BLOWING AIR FROM EACH SIDE**
   Check for stoppage.

EXHAUST GAS RECIRCULATION (EGR) SYSTEM

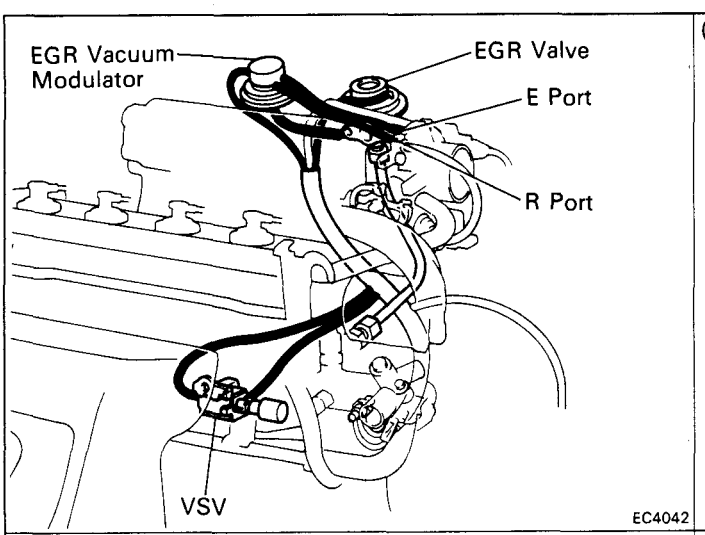

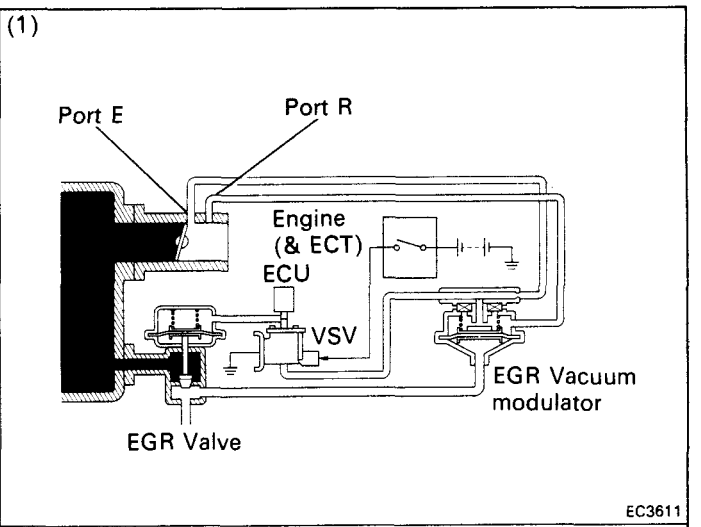

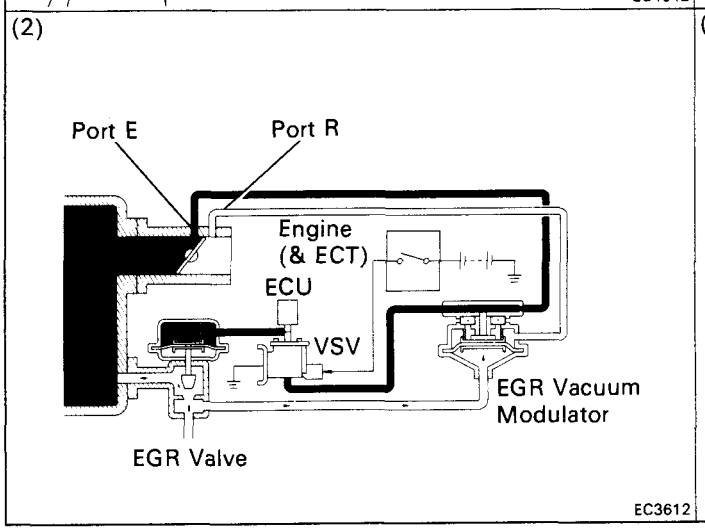

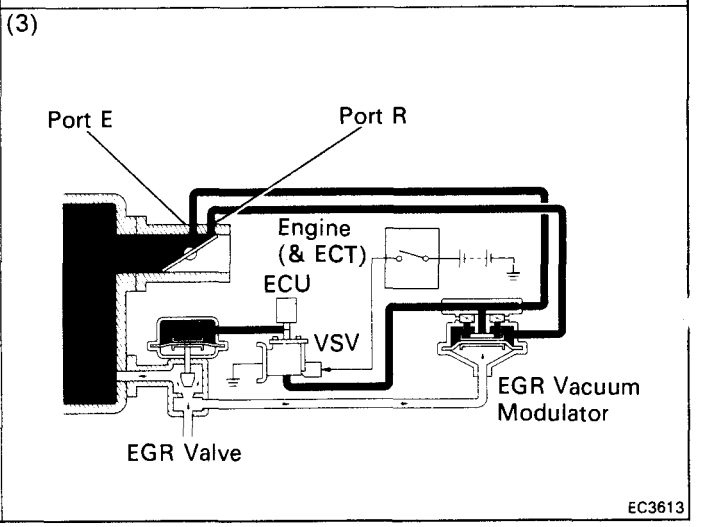

Coolant Temp.	Engine RPM	PIM (ECU)	VSV	Throttle Valve Opening Angle	Pressure in the EGR Valve Pressure Chamber		EGR Vacuum Modulator	EGR Valve	Exhaust Gas
Below 55°C (131°F)	–	–	CLOSED	–	–		–	CLOSED	Not recirculated
Above 60°C (140°F)	Below 4,000 rpm	OFF	CLOSED	Positioned below E port	–		–	CLOSED	Not recirculated
			CLOSED	positioned below E port	(1)	–	–	CLOSED	Not recirculated
		ON ***	OPEN	Positioned between E port and R port	(2) HIGH	*	CLOSESpassage to atmosphere	OPEN	Recirculated
				Positioned above R port	(3) HIGH	**	CLOSES passage to atmosphere	OPEN	Recirculated (increase)
	Above 4,000 rpm	OFF	CLOSED	–	–		–	CLOSED	Not Recirculated

* Pressure increase → Modulator closes → EGR valve opens → Pressure drops → Modulator opens → EGR valve close

** when the throttle valve is positioned above R port, the EGR vacuum modulator will close the atmosphere passage and open the EGR valve to increase the exhaust gas, even if the exhaust pressure is insufficiently low.

*** If terminals TE1 and E1 of check connector are connected, the VSV switches ON.

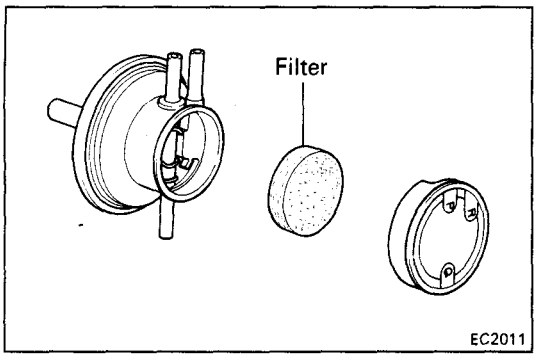

INSPECTION OF EGR SYSTEM

1. CHECK AND CLEAN FILTERS IN EGR VACUUM MODULATOR

(a) Check the filters for contamination or damage.

(b) Using compressed air, clean the filters.

HINT: Install the filters with the coarser surface facing the atmospheric side (outward).

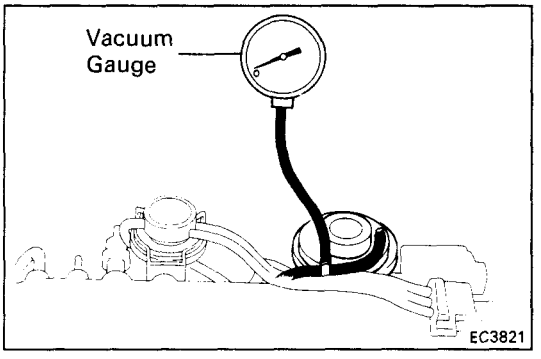

2. PREPARATION

Using a 3-way connector, connect a vacuum gauge to the hose between the EGR valve and VSV.

3. CHECK SEATING OF EGR VALVE

Start the engine and check that the engine starts and runs at idle.

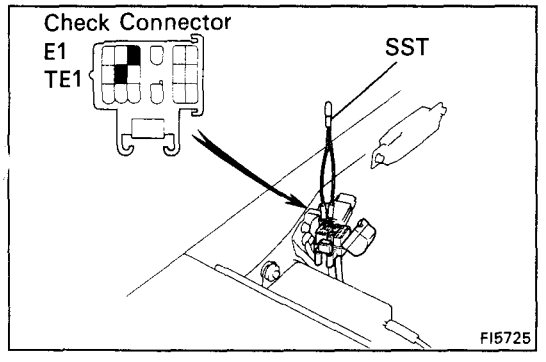

4. CONNECT TERMINALS TE1 AND E1

Using SST, connect the terminals TE1 and E1 of the check connector.

SST 09843-18020

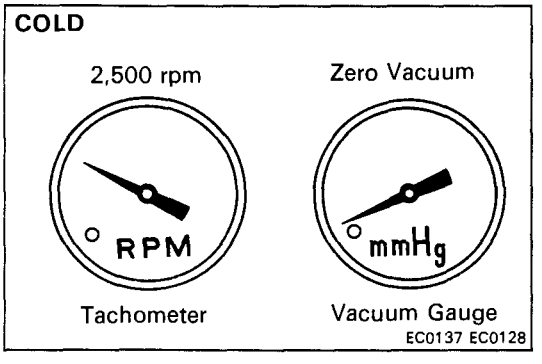

5. CHECK VSV

(a) The coolant temperature should be below 55°C (131°F).

(b) Check that the vacuum gauge indicates zero at 2,500 rpm.

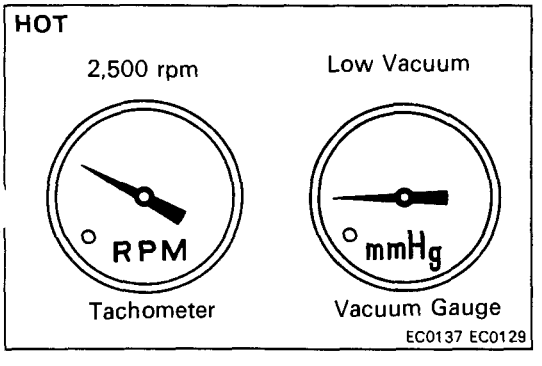

6. CHECK VSV AND EGR VACUUM MODULATOR WITH HOT ENGINE

(a) Warm up the engine.

(b) Check that the vacuum gauge indicates low vacuum at 2,500 rpm.

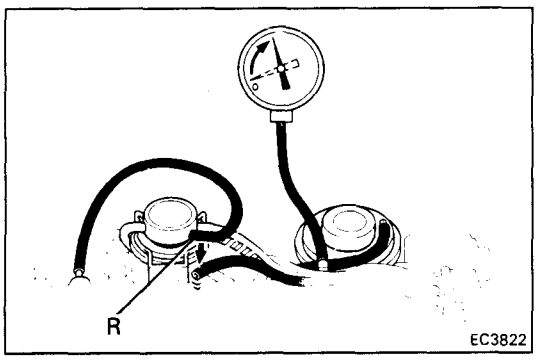

(c) Disconnect the vacuum hose R port of the EGR vacuum modulator and connect R port directly to the intake manifold with another hose.

(d) Check that the vacuum gauge indicates high vacuum at 2,500 rpm.

HINT: As a large amount of exhaust gas enters, the engine will misfire slightly.

(e) Remove the vacuum gauge, and reconnect the vacuum hoses to the proper locations.

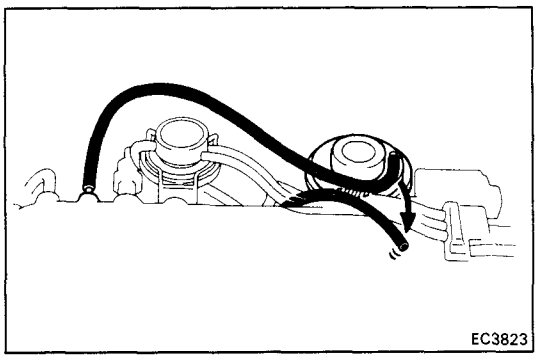

7. CHECK EGR VALVE

(a) Apply vacuum directly to the EGR valve with the engine idling.

(b) Check that the engine runs rough or dies.

(c) Reconnect the vacuum hoses to the proper locations.

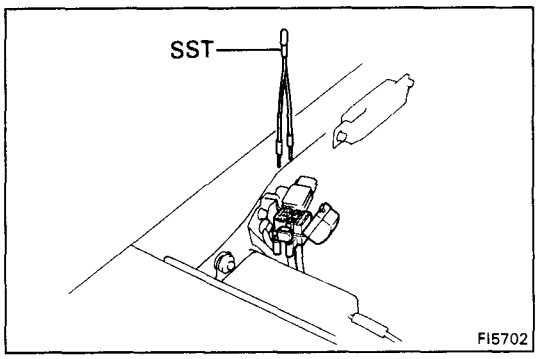

8. DISCONNECT TERMINALS TE1 AND E1

Remove the SST.

SST 09843-18020

IF NO PROBLEM IS FOUND WITH THIS INSPECTION, SYSTEM IS NORMAL; OTHERWISE INSPECT EACH PART

INSPECTION OF VSV

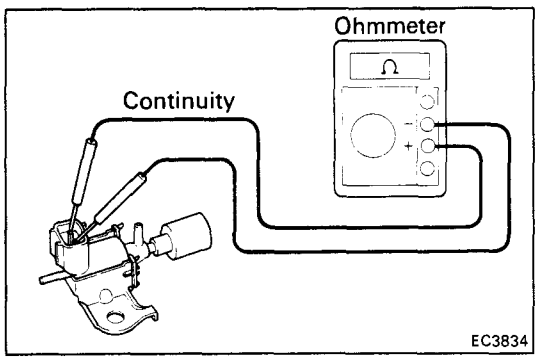

1. CHECK VSV FOR OPEN CIRCUIT

Using an ohmmeter, check that there is conitnuity between the terminals.

Resistance (Cold): 33 – 39 Ω

If there is no continuity, replace the VSV.

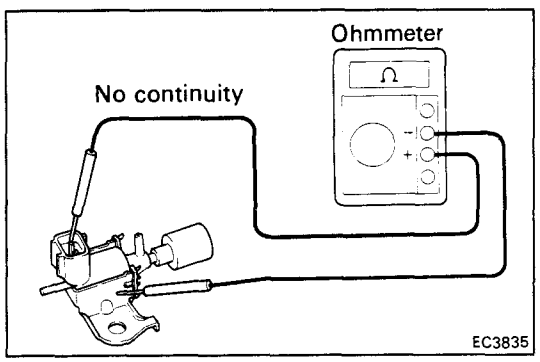

2. CHECK VSV FOR GROUND

Using an ohmmeter, check that there is no conitnuity between each terminal and the body.

If there is continuity, replace the VSV.

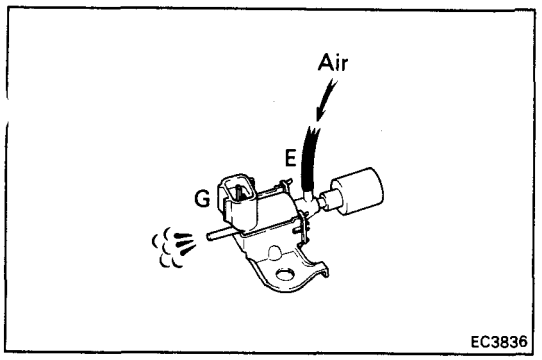

3. CHECK VSV OPERATION

(a) Check that air flows from ports E to G.

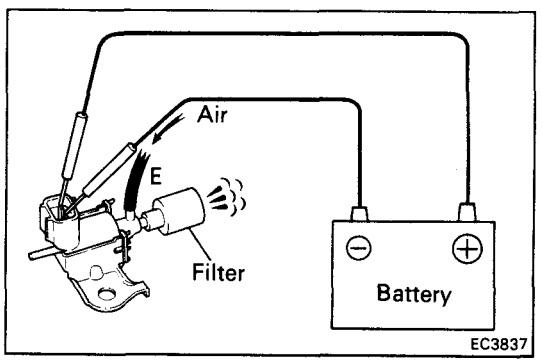

(b) Apply battery voltage across the terminals.

(c) Check that air flows from port E to the filter.

If operation is not as specified, replace the VSV.

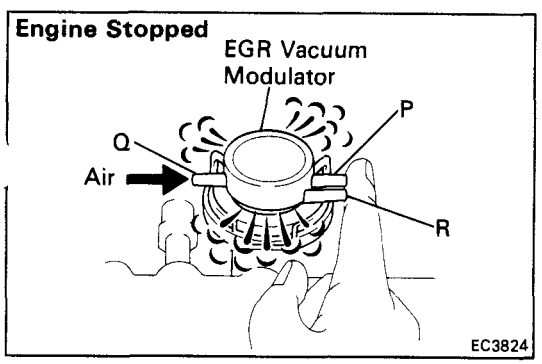

INSPECTION OF EGR VACUUM MODULATOR

CHECK EGR VACUUM MODULATOR OPERATION

(a) Disconnect the vacuum hoses from ports P, Q and R of the EGR vacuum modulator.

(b) Block ports P and R with your finger.

(c) Blow air into port Q, and check that the air passes through to the air filter side freely.

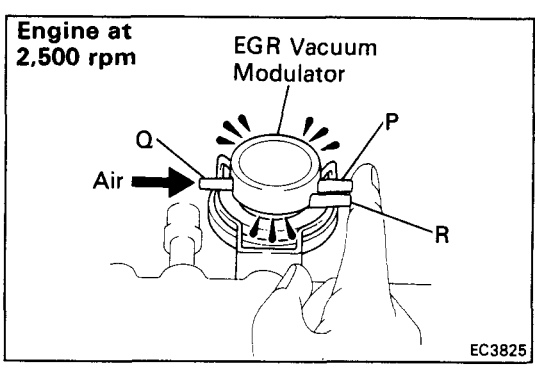

(d) Start the engine, and maintain speed at 2,500 rpm.

(e) Repeat the above test. Check that there is a strong resistance to air flow.

(f) Reconnect the vacuum hoses to the proper locations.

INSPECTION OF EGR VALVE

1. REMOVE EGR VALVE

Check for sticking and heavy carbon deposits.

If a problem is found, replace the valve.

2. REINSTALL EGR VALVE

Install a new gasket.

THREE-WAY CATALYST (TWC) SYSTEM

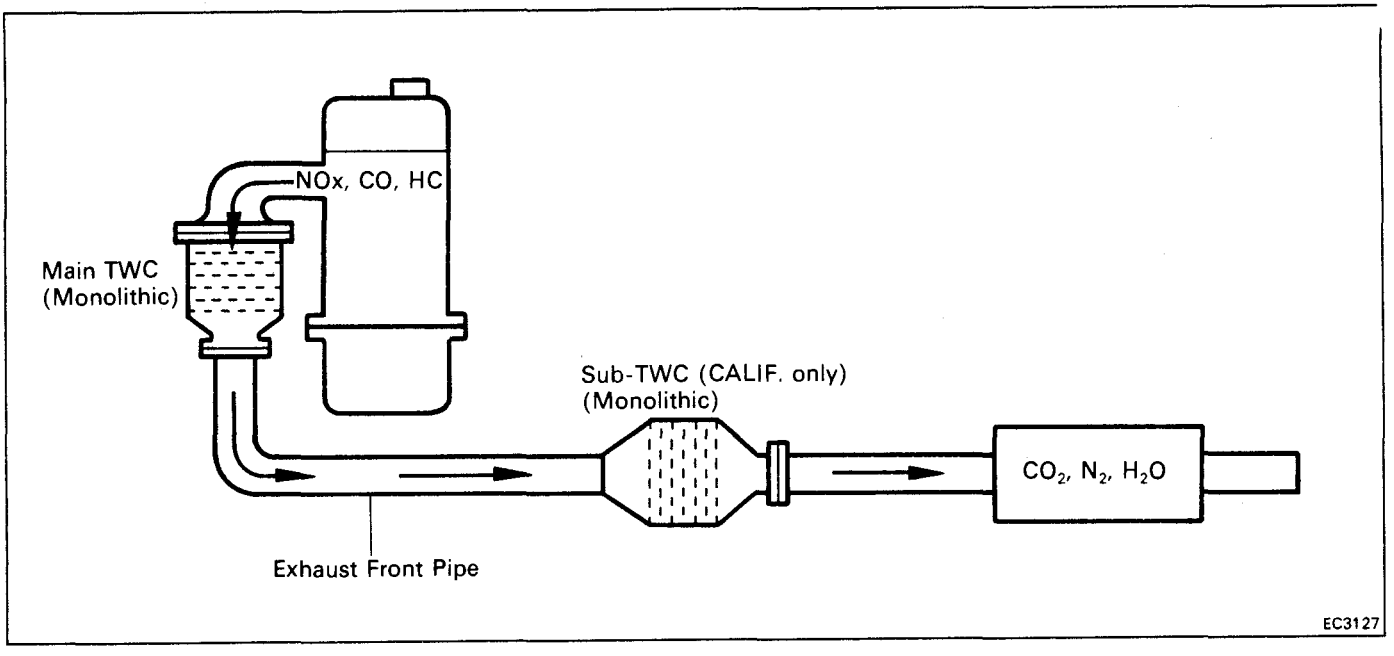

To reduce HC, CO and NOx emissions, they are oxidized, reduced and converted to nitrogen (N_2), carbon dioxide (CO_2) and water (H_2O) by the catalyst.

Exhaust Port		Main TWC		Sub-TWC (CALIF. only)		Exhaust Gas
HC, CO AND NOx	⇒	OXIDATION AND REDUCTION	⇒	OXIDATION AND REDUCTION	⇒	CO_2 H_2O N_2

INSPECTION OF EXHAUST PIPE ASSEMBLY

1. **CHECK CONNECTIONS FOR LOOSENESS OR DAMAGE**
2. **CHECK CLAMPS FOR WEAKNESS, CRACKS OR DAMAGE**

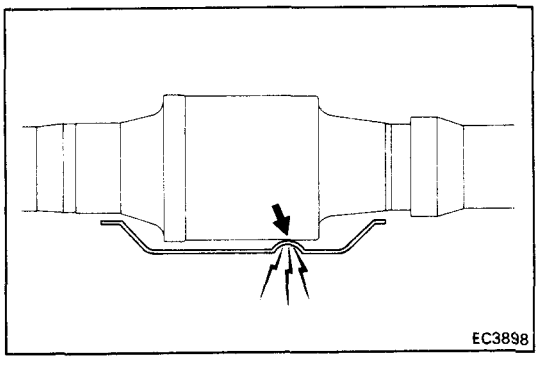

INSPECTION OF CATALYTIC CONVERTER

(Sub-Catalytic Converter (CALIF. only))

CHECK FOR DENTS OR DAMAGE

If any part of protector is damaged or dented to the extent that it contacts the converter, repair or replace it.

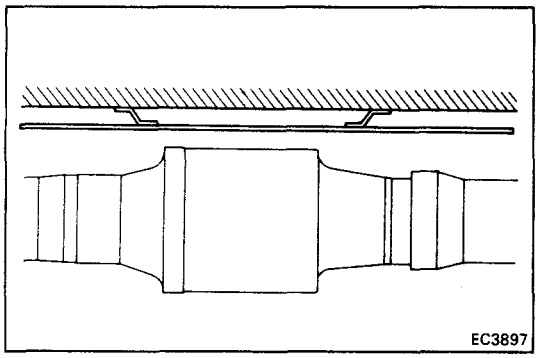

INSPECTION OF HEAT INSULATOR

(Sub-Catalytic Converter (CALIF. only))

1. **CHECK HEAT INSULATOR FOR DAMAGE**
2. **CHECK FOR ADEQUATE CLEARANCE BETWEEN CATALYTIC CONVERTER AND HEAT INSULATOR**

REPLACEMENT OF CATALYTIC CONVERTER(S)

(Main Catalytic Converter)

1. **DISCONNECT CABLE FROM NEGATIVE TERMINAL OF BATTERY**

   CAUTION: Work must be started after approx. 20 seconds or longer from the time the ignition switch is turned to the "LOCK" position and the negative (–) terminal cable is disconnected from the battery.

2. **REMOVE ENGINE UNDER COVERS**
3. **REMOVE FRONT EXHAUST PIPE**
   (See step 1 on page EC-31)
4. **REMOVE MAIN CATALYTIC CONVERTER**
   (a) Check that the converter is cool.
   (b) Disconnect the main oxygen sensor connector.
   (c) (CALIF. only)
   Disconnect the sub-oxygen sensor connector.

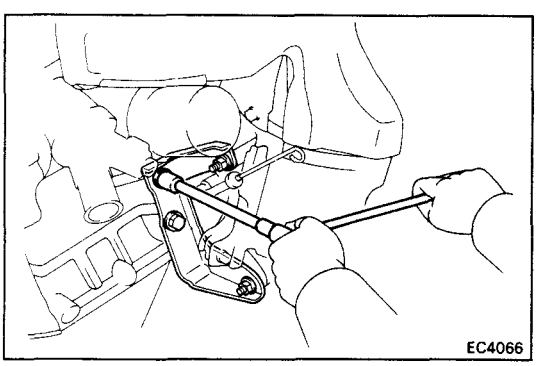

   (d) Remove the two bolts, two nuts and converter stay.

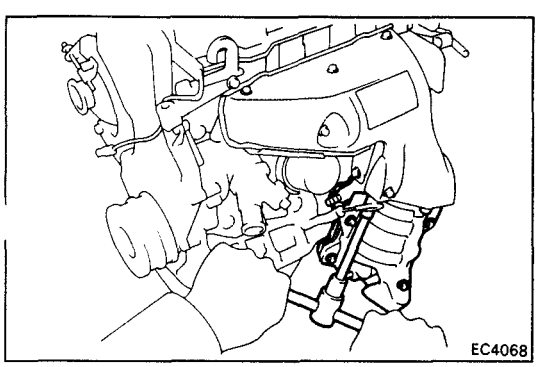

   (e) Remove the three bolts, two nuts, converter, gasket, retainer and cushion.
   (f) Remove the eight bolts and two heat insulators from the converter.

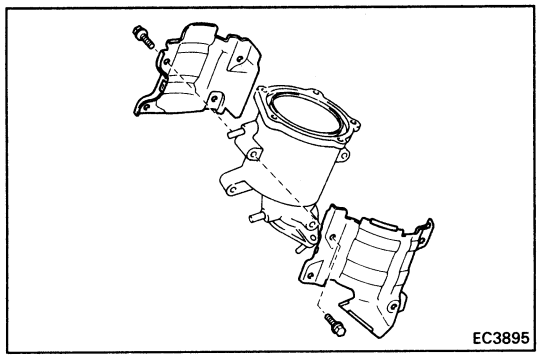

5. REINSTALL MAIN CATALYTIC CONVERTER

(a) Install the two heat insulators to a new converter with the eight bolts.

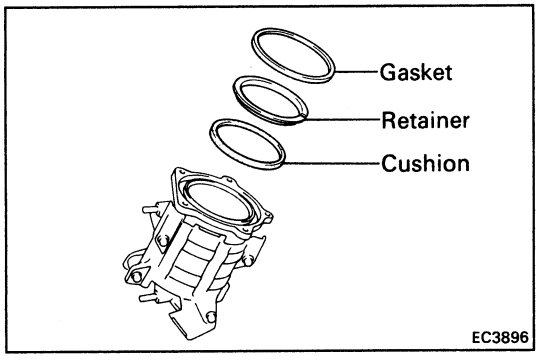

(b) Place the cushion, retainer and a new gasket on the converter.

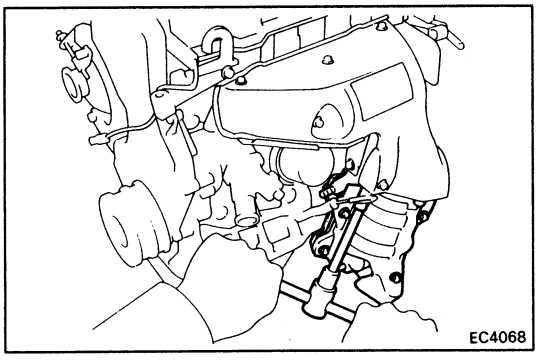

(c) Install the converter with the three bolts and two new nuts.

Torque: 300 kg-cm (21 ft-lb, 29 N·m)

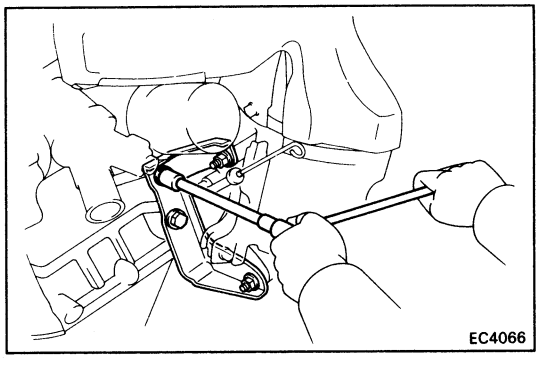

(d) Install the converter stay with the two bolts and two nuts.

Torque: 425 kg-cm (31 ft-lb, 42 N·m)

(e) Connect the main oxygen sensor connector.

(f) (CALIF. only)
Connect the sub-oxygen sensor connector.

6. REINSTALL FRONT EXHAUST PIPE
(See step 2 on pages EC-32 and 33)

7. REINSTALL ENGINE UNDER COVERS

8. CONNECT CABLE TO NEGATIVE TERMINAL OF BATTERY

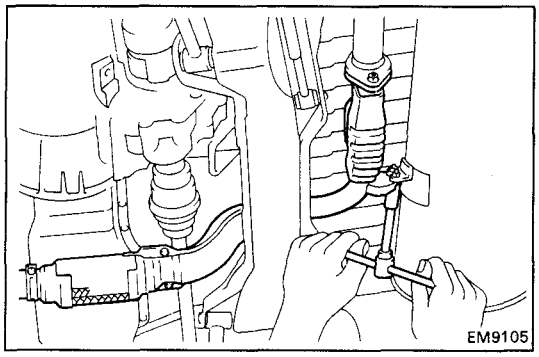

(Sub-Catalytic Converter (CALIF. only)

1. **REMOVE FRONT EXHAUST PIPE (SUB-CATALYTIC CONVERTER)**
   (a) Remove the two bolts holding the front exhaust pipe to the tailpipe stopper bracket.
   (b) Remove the two bolts holding the front exhaust pipe to the tailpipe. Remove the gasket.

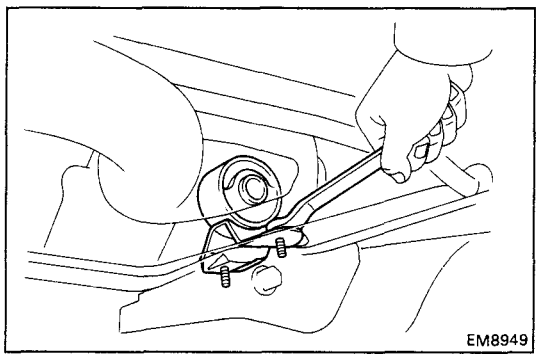

   (c) Remove the two bolts and support bracket.

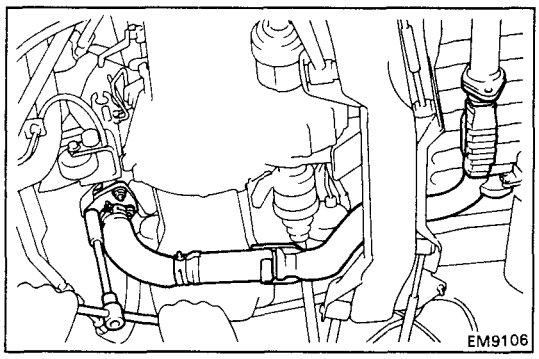

   (d) Using a 14 mm deep socket wrench, remove the three nuts, front exhaust pipe and gasket.

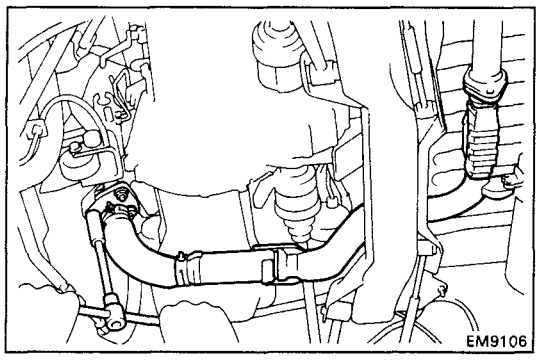

2. **REINSTALL FRONT EXHAUST PIPE (SUB-CATALYTIC CONVERTER)**
   (a) Place a new gasket on the front of the front exhaust pipe.
   (b) Using a 14 mm deep socket wrench, install the front exhaust pipe with three new nuts.
   Torque: 630 kg-cm (46 ft-lb, 62 N·m)

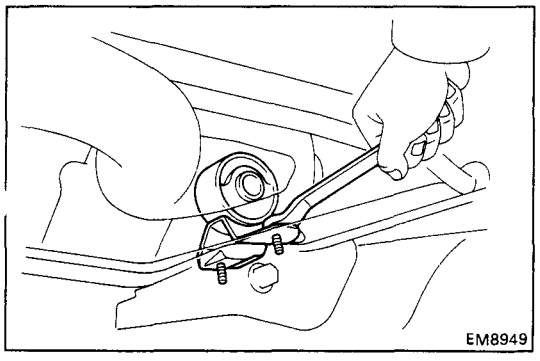

   (c) Install the support bracket with the two bolts.
   Torque: 210 kg-cm (15 ft-lb, 21 N·m)

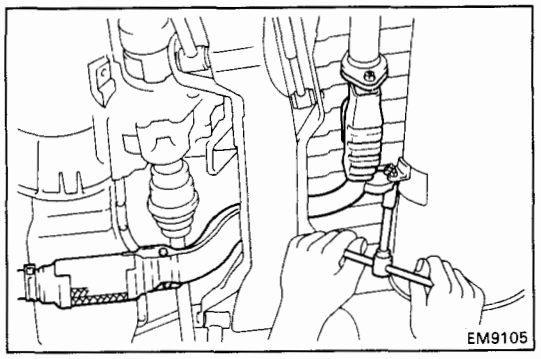

(d) Place a new gasket between the exhaust pipe and tailpipe.

(e) Temporarily install the two bolts holding the front exhaust pipe to the tailpipe.

(f) Install the two bolts holding the stopper bracket of the front exhaust pipe to the tailpipe stopper bracket.

Torque: 190 kg-cm (14 ft-lb, 19 N·m)

(g) Tighten the two bolts holding the front exhaust pipe to the tail pipe.

Torque: 440 kg-cm (32 ft-lb, 43 N·m)

EFI SYSTEM

	Page
DESCRIPTION	FI-2
PRECAUTIONS	FI-5
INSPECTION PRECAUTIONS	FI-5
TROUBLESHOOTING	FI-11
DIAGNOSIS SYSTEM	FI-25
TROUBLESHOOTING WITH VOLT/OHMMETER	FI-33
FUEL SYSTEM	FI-85
Fuel Pump	FI-85
Cold Start Injector (3S-GTE)	FI-99
Cold Start Injector (5S-FE)	FI-102
Fuel Pressure Regulator (3S-GTE)	FI-105
Fuel Pressure Regulator (5S-FE)	FI-107
Injectors (3S-GTE)	FI-110
Injectors (5S-FE)	FI-120
Fuel Tank and Lines	FI-129
AIR INDUCTION SYSTEM	FI-131
Air Flow Meter (3S-GTE)	FI-131
Throttle Body (3S-GTE)	FI-134
Throttle Body (5S-FE)	FI-140
Idle Speed Control (ISC) Valve (3S-GTE)	FI-148
Idle Speed Control (ISC) Valve (5S-FE)	FI-151
ELECTRONIC CONTROL SYSTEM	FI-154
Location of Electronic Control Parts	FI-154
EFI Main Relay	FI-156
Circuit Opening Relay	FI-157
Cold Start Injector Time Switch	FI-158
Solenoid Resistor (3S-GTE)	FI-159
Fuel Pump Relay and Resistor (3S-GTE)	FI-160
Fuel Pressure VSV (5S-FE)	FI-161
T-VIS VSV (3S-GTE)	FI-163
Turbocharging Pressure VSV (3S-GTE)	FI-165
EGR VSV	FI-167
Water Temperature Sensor	FI-168
Intake Air Temperature Sensor (5S-FE)	FI-169
Vacuum Sensor (Manifold Absolute Pressure Sensor) (5S-FE)	FI-170
Turbocharging Pressure Sensor (3S-GTE)	FI-171
EGR Gas Temperature Sensor (3S-GTE and 5S-FE (CALIF. only))	FI-172
Oxygen Sensor (Main)	FI-173
Sub-Oxygen Sensor (5S-FE CALIF. only)	FI-175
Electronic Controlled Unit (ECU)	FI-176
Fuel Cut RPM	FI-182

DESCRIPTION

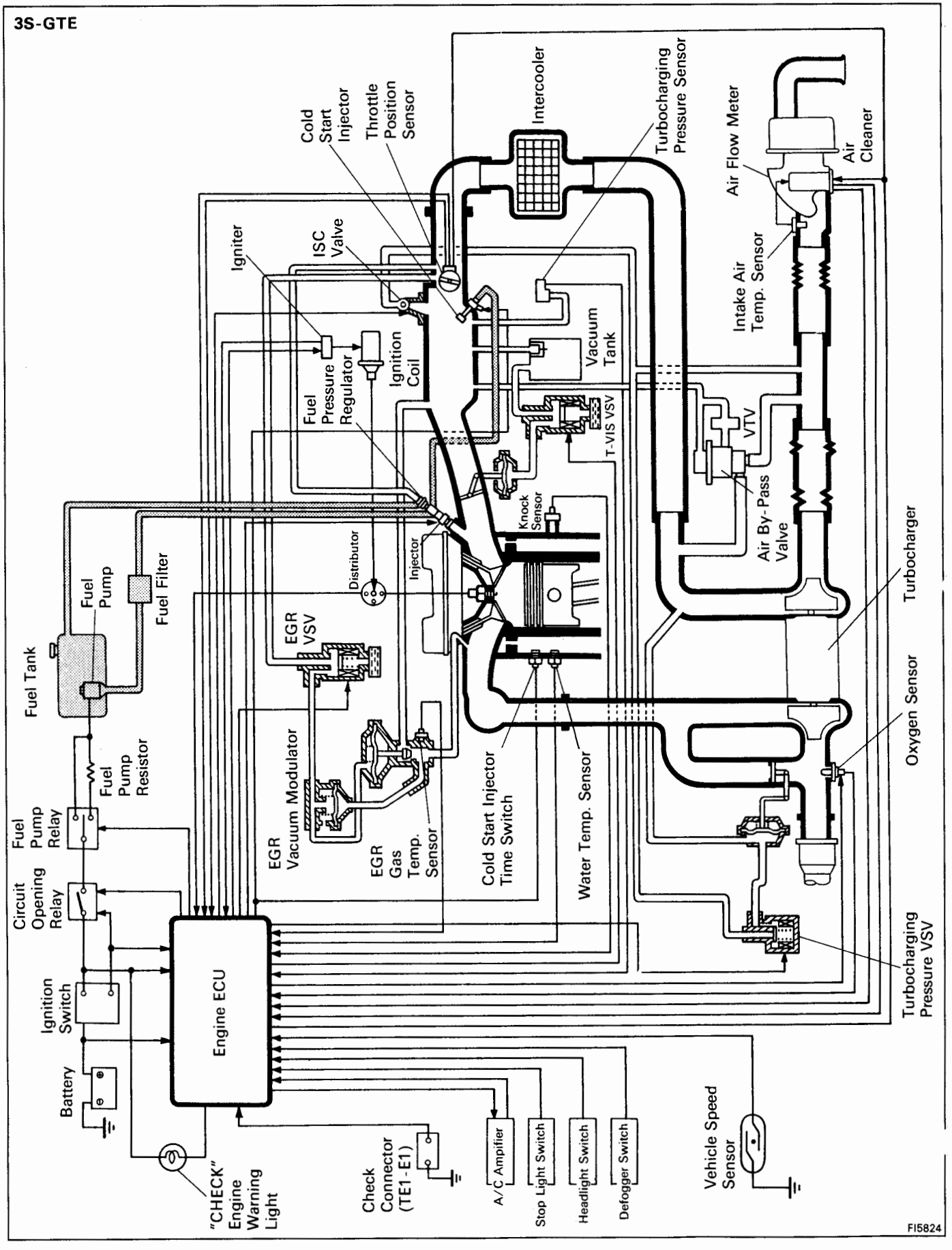

5S-FE

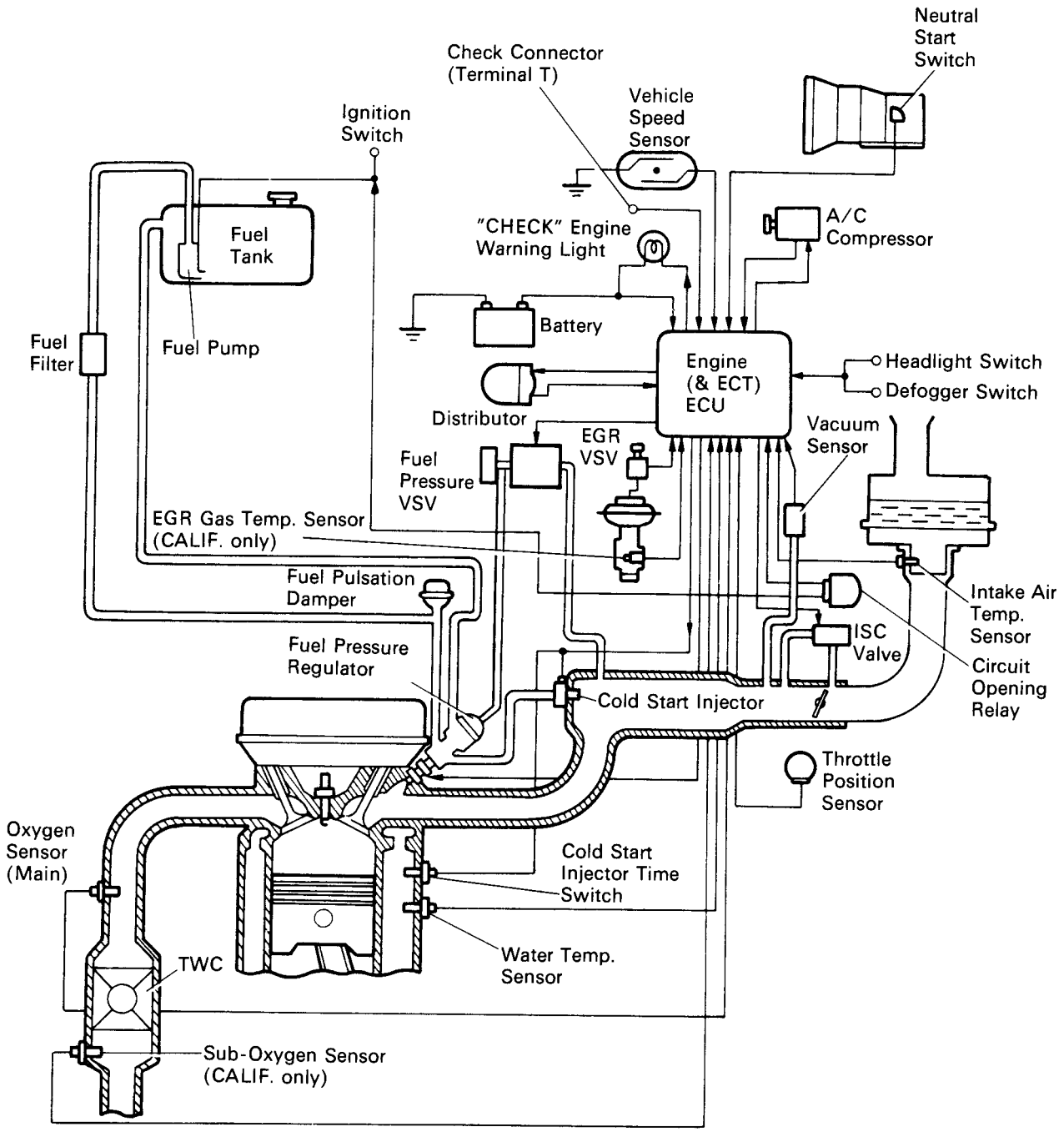
Neutral Start Switch
Check Connector (Terminal T)
Vehicle Speed Sensor
Ignition Switch
Fuel Tank
"CHECK" Engine Warning Light
A/C Compressor
Battery
Fuel Filter
Fuel Pump
Engine (& ECT) ECU
Headlight Switch
Defogger Switch
Distributor
EGR VSV
Vacuum Sensor
Fuel Pressure VSV
EGR Gas Temp. Sensor (CALIF. only)
Fuel Pulsation Damper
Intake Air Temp. Sensor
ISC Valve
Fuel Pressure Regulator
Circuit Opening Relay
Cold Start Injector
Throttle Position Sensor
Oxygen Sensor (Main)
Cold Start Injector Time Switch
Water Temp. Sensor
TWC
Sub-Oxygen Sensor (CALIF. only)

FI5808

The EFI system is composed of three basic sub-systems: Fuel, Air Induction and Electronic Control Systems.

FUEL SYSTEM

Fuel is supplied under constant pressure to the EFI injectors by an electric fuel pump. The injectors inject a metered quantity of fuel into the intake port in accordance with signals from the ECU (Electronic Control Unit).

AIR INDUCTION SYSTEM

The air induction system provides sufficient air for engine operation.

ELECTRONIC CONTROL SYSTEM

The MR2 3S-GTE and 5S-FE engines are equipped with which centrally controls the EFI, ESA, ISC, Diagnosis systems etc. by means of an Electronic Control Unit (ECU-formerly EFI computer) employing a microcomputer.

The ECU, TCCS controls the following functions:

1. Electronic Fuel Injection (EFI)
   The ECU receives signals from various sensors indicating changing engine operation conditions such as:
   - Intake air volume (3S-GTE)
   - Intake manifold pressure (5S-FE)
   - Intake air temperature
   - Coolant temperature
   - Engine rpm
   - Throttle valve opening angle
   - Exhaust oxygen content etc.

   The signals are utilized by the ECU to determine the injection duration necessary for an optimum air-fuel ratio.

2. Electronic Spark Advance (ESA)
   The ECU is programmed with data for optimum ignition timing under any and all operating conditions. Using data provided by sensors which monitor various engine functions (rpm, coolant temperature, etc.), the microcomputer (ECU) triggers the spark at precisely right instant. (See IG section)

3. Idle Speed Control (ISC)
   The ECU is programmed with target idling speed values to respond to different engine conditions (coolant temperature, air conditioner ON/OFF, etc.). Sensors transmit signals to the ECU which controls the flow of air through the by-pass of the throttle valve and adjust idle speed to the target value.

4. Diagnosis
   The ECU detects any malfunctions and abnormalties in the sensor network and lights a "CHECK" engine warning light on the instrument panel. At the same time, the trouble is identified and a diagnosis code is recorded by the ECU. The diagnosis code can be read by the number of blinks of the "CHECK" engine warning light when terminals TE1 and E1 are connected. The diagnostic codes are refer to the later page. (See page FI-28 or 30)

5. Fail-safe Function
   In the event of the sensor malfunctioning, a back-up circuit will take over to provide minimal drivability, and the "CHECK" engine warning light will illuminate.

PRECAUTIONS

1. **Before working on the fuel system, disconnect the cable from negative (–) terminal of the battery.**

   HINT: Any diagnostic code retained by the computer will be erased when the battery terminal is removed. Therefore, if necessary, read the diagnosis before removing the battery terminal.

2. **Do not smoke or work on open flame when working on the fuel system.**

3. **Keep gasoline away from rubber or leather parts.**

INSPECTION PRECAUTIONS

MAINTENANCE PRECAUTIONS

1. **CHECK CORRECT ENGINE TUNE-UP (See page EM-10)**

2. **PRECAUTIONS WHEN CONNECTING GAUGE**

   (a) Use the battery as the power source for the timing light, tachometer, etc.

   (b) Connect the test probe of a tachometer to the terminal IG⊖ of the check connector.

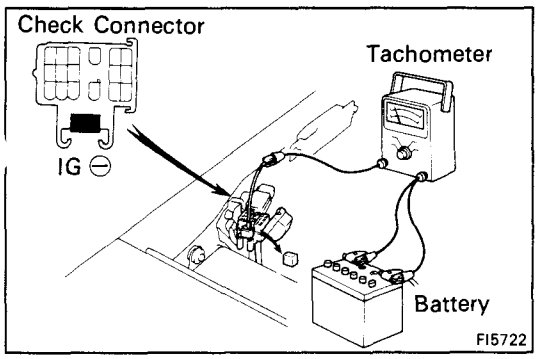

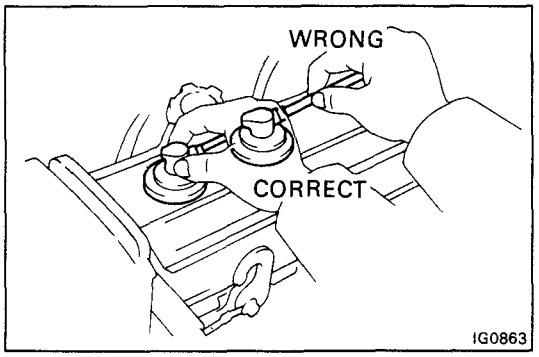

3. **IN EVENT OF ENGINE MISFIRE, FOLLOWING PRECAUTIONS SHOULD BE TAKEN**

   (a) Check proper connection of battery terminals, etc.

   (b) Handle high-tension cords carefully.

   (c) After repair work, check that the ignition coil terminals and all other ignition system lines are reconnected securely.

   (d) When cleaning the engine compartment, be especially careful to protect the electrical system from water.

4. **PRECAUTIONS WHEN HANDLING OXYGEN SENSOR**

   (a) Do not allow oxygen sensor to drop or hit against an object.

   (b) Do not allow the sensor to come into contact with water.

IF VEHICLE IS EQUIPPED WITH MOBILE RADIO SYSTEM (HAM, CB, ETC.)

The ECU has been designed so that it will not be affected by outside interference.

However, if your vehicle is equipped with a CB radio transceiver, etc. (even one with about 10 W output), it may, at times, have an effect upon ECU operation, especially if the antenna and feeder are installed nearby.

Therefore, observe the following precautions:

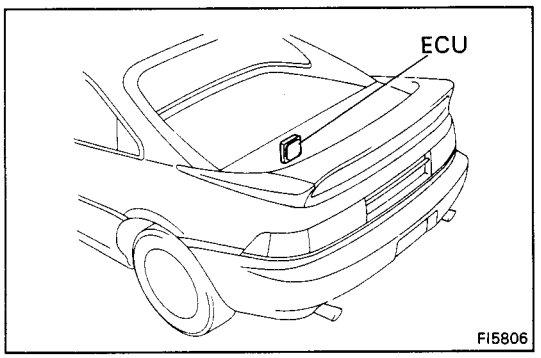

1. Install the antenna as far as possible from the ECU. The ECU is located under the radio so the antenna should be installed at the rear side of the vehicle.
2. Keep the antenna feeder as far away as possible from the ECU wires – at least 20 cm (7.87 in.) – and, especially, do not wind them together.
3. Check that the feeder and antenna are properly adjusted.
4. Do not equip your vehicle with a powerful mobile radio system.
5. Do not open the cover or the case of the ECU unless absolutely necessary. (If the IC terminals are touched, the IC may be destroyed by static electricity.)

AIR INDUCTION SYSTEM

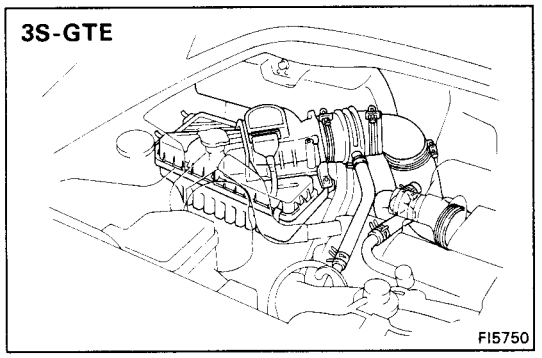

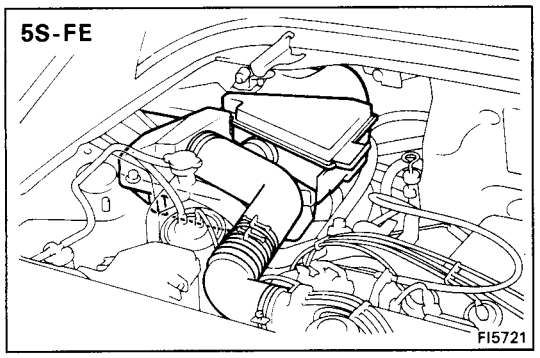

1. Separation of the engine oil dipstick, oil filler cap, PCV hose, etc. may cause the engine to run out of tune.
2. Disconnection, looseness or cracks in the parts of the air induction system between the throttle body and cylinder head will cause air suction and cause the engine to run out of tune.

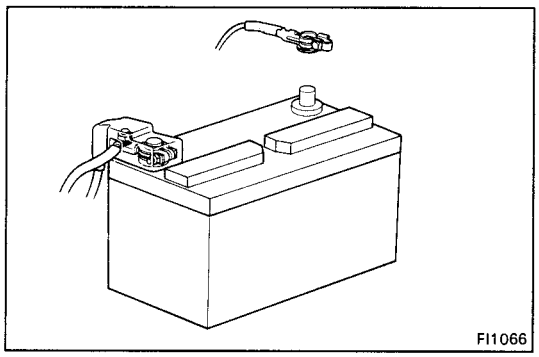
FI1066

ELECTRONIC CONTROL SYSTEM

1. Before removing EFI wiring connectors, terminals, etc., first disconnect the power by either turning the ignition switch OFF or disconnecting the battery terminals.

   HINT: Always check the diagnosis code before disconnecting the battery terminals.

2. When installing the battery, be especially careful not to incorrectly connect the positive (+) and negative (–) cables.

3. Do not permit parts to receive a severe impact during removal or installation. Handle all EFI parts carefully, especially the ECU.

4. Do not be careless during troubleshooting as there are numerous transistor circuits and even slight terminal contact can cause further troubles.

5. Do not open the ECU cover.

6. When inspecting during rainy weather, take care to prevent entry of water. Also, when washing the engine compartment, prevent water from getting on the EFI parts and wiring connectors.

7. Parts should be replaced as an assembly.

8. Care is required when pulling out and inserting wiring connectors.

   (a) Release the lock and pull out the connector, pulling on the connectors.

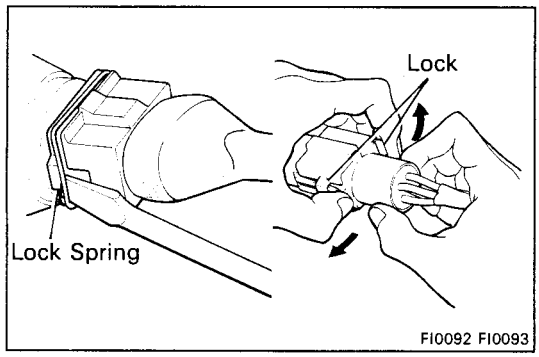

FI0092 FI0093

   (b) Fully insert the connector and check that it is locked.

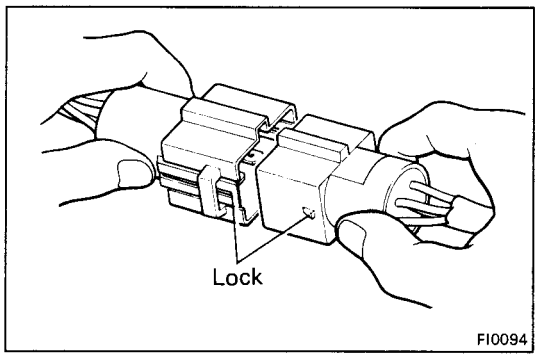

FI0094

9. When inspecting a connector with a volt/ohmmeter.

   (a) Carefully take out the water-proofing rubber if it is a water-proof type connector.

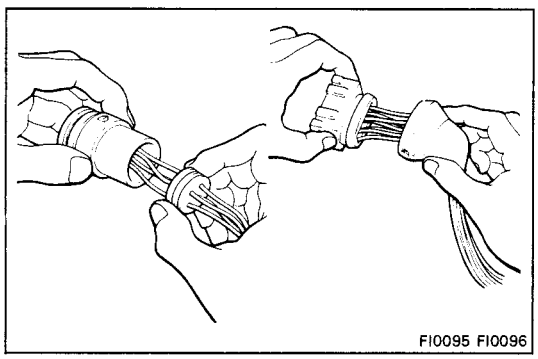
FI0095 FI0096

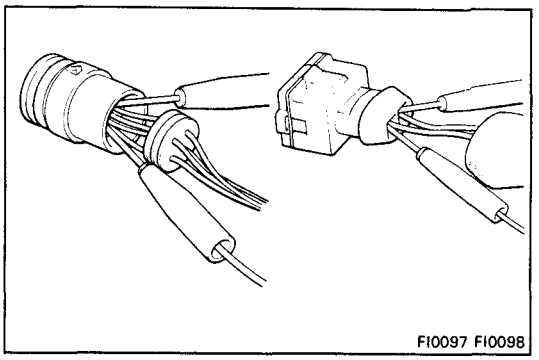

(b) Insert the test probe into the connector from wiring side when checking the continuity, amperage or voltage.

(c) Do not apply unnecessary force to the terminal.

(d) After checking, install the water-proofing rubber on the connector securely.

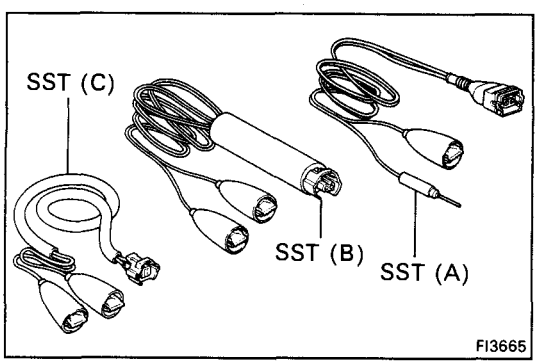

10. Use SST for inspection or test of the injector, cold start injector or its wiring connector.

SST 09842-30050 (A) and 09842-30060 (B) for 3S-GTE
09842-30050 (A) and 09842-30070 (C) for 5S-FE

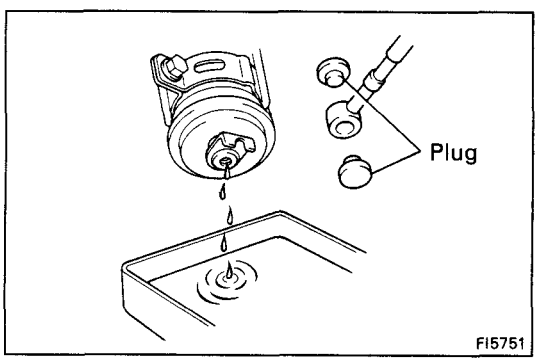

FUEL SYSTEM

1. When disconnecting the high fuel pressure line, a large amount of gasoline will spill out, so observe the following procedures:

(a) Put a container under the connection.

(b) Slowly loosen the connection.

(c) Disconnect the connection.

(d) Plug the connection with a rubber plug.

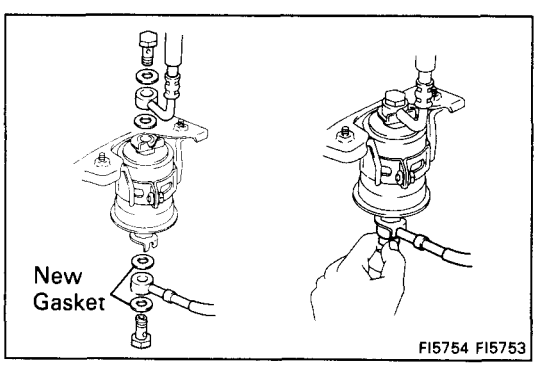

2. When connecting the flare nut or union bolt on the high pressure pipe union, observe the following procedures:

(Union Bolt Type)

(a) Always use a new gasket.

(b) Tighten the union bolt by hand.

(c) Tighten the union bolt to the specified torque.

Torque: 300 kg-cm (22 ft-lb, 29 N·m)

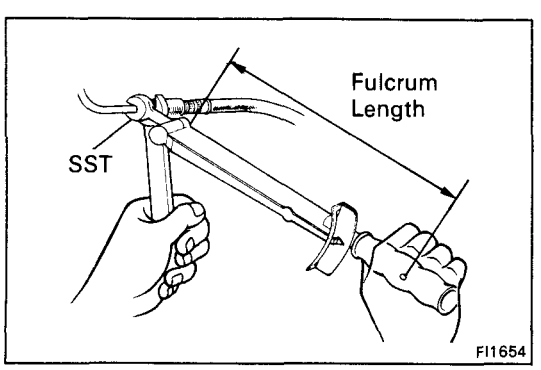

(Flare Nut Type)

(a) Apply a light coat of engine oil to the flare nut and tighten the flare nut by hand.

(b) Using SST, tighten the flare nut to specified torque.

SST 09631-22020

Torque: 310 kg-cm (22 ft-lb, 30 N·m)

HINT: Use a torque wrench with a fulcrum length of 30 cm (11.81 in.).

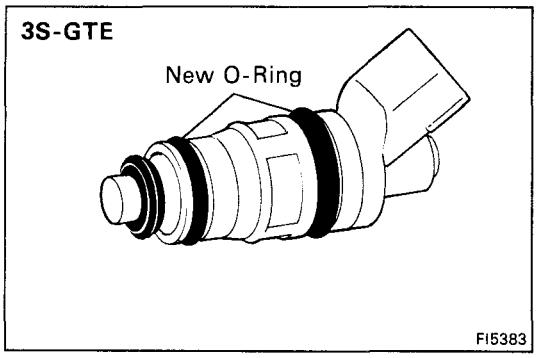

3. Observe the following precautions when removing and installing the injectors.
   (a) Never reuse the O-ring.
   (b) When placing a new O-ring on the injector, take care not to damage it in any way.
   (c) Coat a new O-ring with spindle oil or gasoline before installing – never use engine, gear or brake oil.

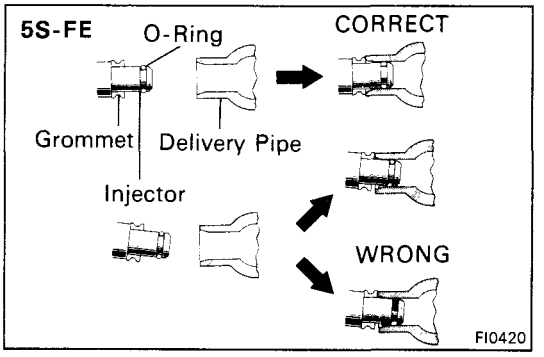

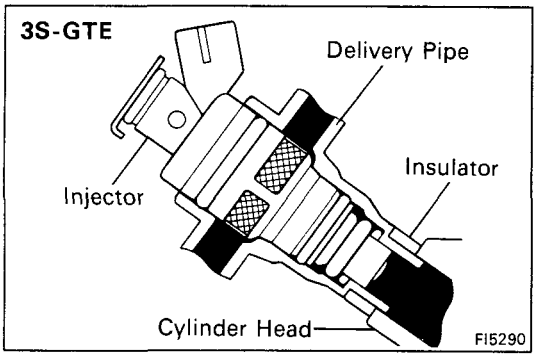

4. Install the injector to delivery pipe and cylinder head as shown in the figure.

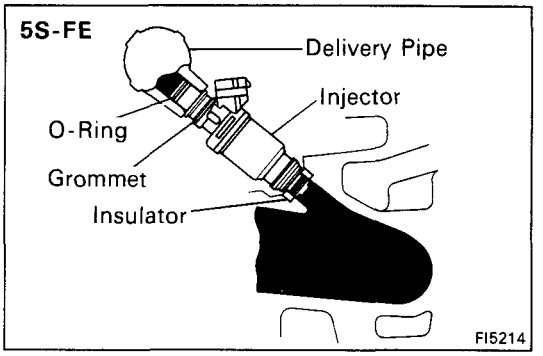

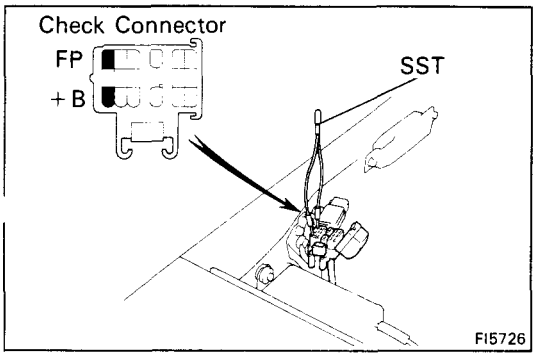

5. Check that there are no fuel leaks after performing any maintenance on the fuel system.
   (a) Using SST, connect terminals +B and FP of the check connector.

   SST 09843-18020

   (b) With engine stopped, turn the ignition switch ON.

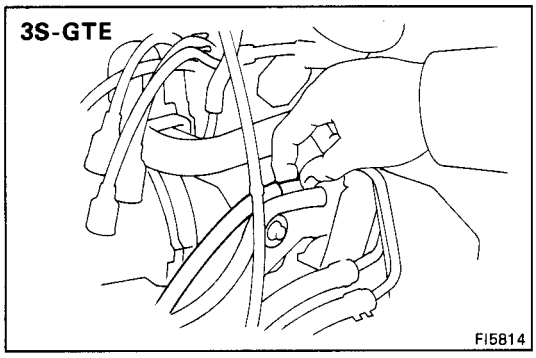

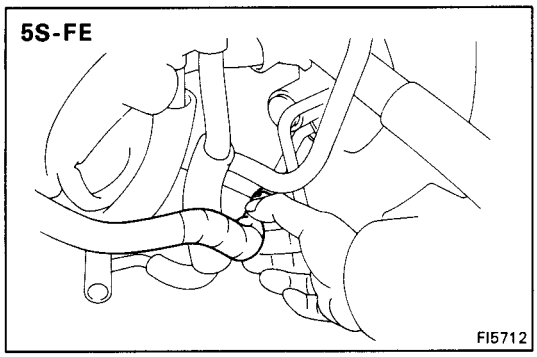

(c) When the fuel return hose is pinched, the pressure within high pressure line will rise to approx. 4 kg/cm^2 (57 psi, 392 kPa). In this state, check to see that there are no leaks from any part of the fuel system.

NOTICE: Always pinch the hose. Avoid bending as it may cause the hose to crack.

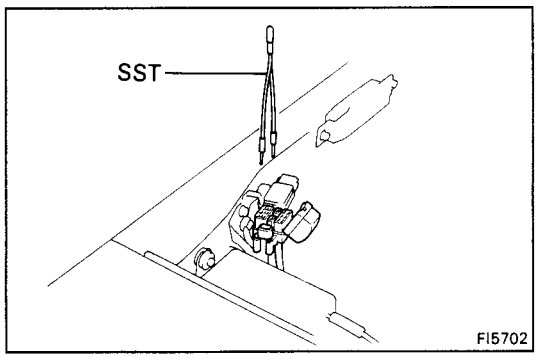

(d) Turn the ignition switch OFF.

(e) Remove the SST.

SST 09843-18020

TROUBLESHOOTING

TROUBLESHOOTING HINTS

1. Engine troubles is usually not caused by the EFI system. When troubleshooting, always first check the condition of the other systems.
   (a) Electronic source
      - Battery
      - Fusible links
      - Fuses
   (b) Body ground
   (c) Fuel supply
      - Fuel leakage
      - Fuel filter
      - Fuel pump
   (d) Ignition system
      - Spark plugs
      - High-tension cords
      - Distributor
      - Ignition coil
      - Igniter
   (e) Air induction system
      - Vacuum leaks
   (f) Emission control system
      - PCV system
      - EGR system
   (g) Others
      - Ignition timing (ESA system)
      - Idle speed (ISC system)
      - etc.

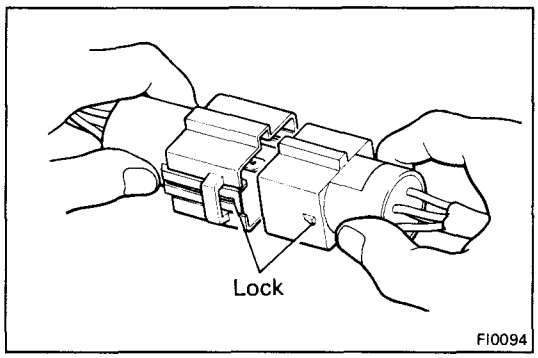

2. The most frequent cause of problems is simply a bad contact in wiring connectors. Always check that connections are secure.

   When inspecting the connector, pay particular attention to the following points:
   (a) Check to see that the terminals are not bent.
   (b) Check to see that the connector is pushed in completely and locked.
   (c) Check to see that there is no signal change when the connector is slightly tapped or wiggled.

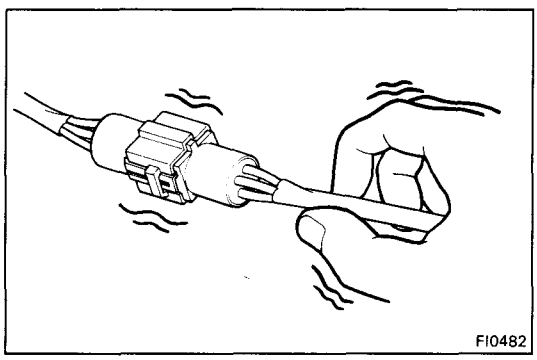

3. Troubleshoot sufficiently for other causes before replacing the ECU, as the ECU is of high quality and it is expensive.

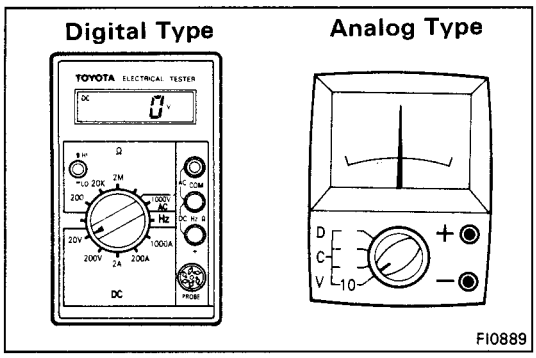

4. Use a volt/ohmmeter with high impedance (10 kΩ/V minimum) for troubleshooting of the electrical circuit. (See page FI-33)

TROUBLESHOOTING PROCEDURES

SYMPTOM – DIFFICULT TO START OR TO NO START (ENGINE WILL NOT CRANK OR CRANKS SLOWLY)

CHECK ELECTRONIC SOURCE → BAD →
1. Battery
   (1) Connections
   (2) Gravity – Drive belt – Charging system
   (3) Voltage

↓ OK

CHECK STARTING SYSTEM → BAD →
1. Ignition switch
2. (A/T) Neutral start switch
3. (M/T) Clutch start switch
4. (M/T) Starter relay (See page ST-18)
5. Starter (See page ST-3)
6. Wirings/Connections

SYMPTOM – DIFFICULT TO START OR NO START (CRANKS OK)

CHECK DIAGNOSIS SYSTEM
Check for output of diagnosis code. (See page FI-25)
→ Malfunction code (s) → Diagnostic codes (See page FI-28 or 30)

↓ Normal code

DOES ENGINE START WITH ACCELERATOR PEDAL DEPRESSED? → OK →
ISC system
(1) ISC valve (See page FI-148 or 151)
(2) Wiring connection

↓ NO

CHECK FOR VACUUM LEAKS IN AIR INTAKE LINE → BAD →
1. Oil filler cap
2. Oil dipstick
3. Hose connections
4. PCV hose(s)
5. EGR system – EGR valve stays open

↓ OK CONTINUED ON PAGE FI-13

OK CONTINUED FROM PAGE FI-12

CHECK IGNITION SPARK
(See page IG-5 or 10)

BAD →
1. High-tension cords
2. Distributor
3. Ignition coil
4. Igniter

OK ↓

CHECK SPARK PLUGS
Standard:
3S-GTE 0.8 mm (0.031 in.)
5S-FE 1.1 mm (0.043 in.)
HINT: Check compression pressure and valve clearance if necessary.

NO →
1. Spark plugs (See page IG-6 or 11)
2. Compression pressure (See page EM-25)
   Minimum (at 250 rpm):
   3S-GTE 9.0 kg/cm² (128 psi, 883 kPa)
   5S-FE 10.0 kg/cm² (142 psi, 981 kPa)
3. Valve clearance (Cold)
   (See page EM-11 or 16)
   Standard:
   3S-GTE IN 0.15 – 0.25 mm (0.006 – 0.010 in.)
   EX 0.20 – 0.30 mm (0.008 – 0.012 in.)
   5S-FE IN 0.19 – 0.29 mm (0.007 – 0.011 in.)
   EX 0.28 – 0.38 mm (0.011 – 0.015 in.)

BAD (All Plugs WET) →
1. Injectors – Shorted or leaking
2. Injector wiring – short circuited
3. Cold start injector – leakage
   (See page FI-99 or 102)
4. Cold start injector time switch
   (See page FI-158)

OK ↓

CHECK FUEL SUPPLY TO INJECTOR
1. Fuel tank
2. Fuel pressure in fuel line
   (1) Connect terminals +B and FP or the check connector.
   (2) Fuel pressure at fuel hose of fuel filter can be felt.
   (See page FI-87)

BAD →
1. Fuel line – leakage – deformation
2. Fuses
3. Circuit opening relay
   (See page FI-157)
4. Fuel pump (See page FI-85)
5. Fuel filter
6. Fuel pressure regulator
   (See page FI-105 or 107)

OK ↓

CHECK IGNITION TIMING
1. Connect terminals TE1 and E1 of the check connector.
2. Check ignition timing.
   Standard: 10° BTDC @ idle

BAD →
Ignition timing – Adjust
(See page IG-17 or 22)

OK CONTINUED ON PAGE FI-14

OK CONTINUED FROM PAGE FI-13

CHECK EFI ELECTRONIC CIRCUIT USING VOLT/OHMMETER
(See page FI-33)

BAD →

1. Wiring connections
2. Power to ECU
   (1) Fusible links
   (2) Fuses
   (3) EFI main relay (See page FI-156)
3. (3S-GTE)
   Air flow meter (See page FI-131)
4. (5S-FE)
   Vacuum sensor (See page FI-170)
5. Water temp. sensor (See page FI-168)
6. Intake air temp. sensor
   (See page FI-131 or 169)
7. Injection signal circuit
   (1) Injector wiring
   (2) (3S-GTE)
      Solenoid resistor
      (See page FI-159)
   (3) ECU (See page FI-176)

SYMPTOM – ENGINE OFTEN STALLS

CHECK DIAGNOSIS SYSTEM
Check for output of diagnosis code.
(See page FI-25)

Malfunction code (s) →

Diagnostic codes
(See page FI-28 or 30)

Normal code ↓

CHECK FOR VACUUM LEAKS IN AIR INTAKE LINE

BAD →

1. Oil filler cap
2. Oil dipstick
3. Hose connections
4. PCV hose (s)
5. EGR system – EGR valve stays open

OK ↓

CHECK FUEL SUPPLY TO INJECTOR
1. Fuel tank
2. Fuel pressure in fuel line
   (1) Connect terminals +B and FP of the check connector.
   (2) Fuel pressure at fuel hose of fuel fuel filter can be felt.
   (See page FI-87)

BAD →

1. Fuel lines – leakage – deformation
2. Fuses
3. Fuel pump (See page FI-85)
4. Fuel filter
5. Fuel pressure regulator
   (See page FI-105 or 107)

OK ↓

CHECK AIR FILTER

BAD →

Element – Clean or replace

OK ↓

CONTINUED ON PAGE FI-15

OK CONTINUED FROM PAGE FI-14

CHECK IDLE SPEED
Standard:
3S-GTE 800 ± 50 rpm
5S-FE 750 ± 50 rpm USA M/T
700 ± 50 rpm USA A/T
850 ± 50 rpm CANADA M/T
750 ± 50 rpm CANADA A/T

BAD →
1. ISC system
   (1) Wiring connection
   (2) ISC valve (See page FI-148 or 151)
   (3) ECU (test by substitution)
2. (5S-FE)
   Idle speed – Adjust
   (See page EM-20)

OK ↓

CHECK IGNITION TIMING
1. Connect terminals TE1 and E1 of the check connector.
2. Check ignition timing.
   Standard: 10° BTDC @ idle

NO →
Ignition timing – Adjust
(See page IG-17 or 22)

OK ↓

CHECK SPARK PLUGS
Standard:
3S-GTE 0.8 mm (0.031 in.)
5S-FE 1.1 mm (0.043 in.)
HINT: Check compression pressure and valve clearance if necessary.

NO →
1. Spark plugs (See page IG-6 or 11)
2. Compression pressure (See page EM-25)
   Minimum (at 250 prm):
   3S-GTE 9.0 kg/cm² (128 psi, 883 kPa)
   5S-FE 10.0 kg/cm² (142 psi, 981 kPa)
3. Valve clearance (Cold)
   (See page EM-11 or 16)
   Standard:
   3S-GTE IN 0.15 – 0.25 mm (0.006 – 0.010 in.)
   EX 0.20 – 0.30 mm (0.008 – 0.012 in.)
   5S-FE IN 0.19 – 0.29 mm (0.007 – 0.011 in.)
   EX 0.28 – 0.38 mm (0.011 – 0.015 in.)

OK ↓

CHECK COLD START INJECTOR
(See page FI-99 or 102)

BAD →
1. Cold start injector
   (See page FI-99 or 102)
2. Cold start injector time switch
   (See page FI-158)

OK ↓

CHECK FUEL PRESSURE
(See page FI-87)

BAD →
1. Fuel pump (See page FI-85)
2. Fuel filter
3. Fuel pressure regulator
   (See page FI-105 or 107)

OK ↓

CHECK INJECTORS
(See page FI-110 or 120)

BAD →
Injection condition

OK CONTINUED ON PAGE FI-16

OK CONTINUED FROM PAGE FI-15

CHECK EFI ELECTRONIC CIRCUIT USING VOLT/OHMMETER
(See page FI-33)

BAD →

1. Wiring connections
2. Power to ECU
   (1) Fusible links
   (2) Fuses
   (3) EFI main relay (See page FI-156)
3. (3S-GTE)
   Air flow meter (See page FI-131)
4. (5S-FE)
   Vacuum sensor (See page FI-170)
5. Water temp. sensor (See page FI-168)
6. Intake air temp. sensor
   (See page FI-169)
7. Injection signal circuit
   (1) Injector wiring
   (2) (3S-GTE)
      Solenoid resistor
      (See page FI-159)
   (3) ECU (See page FI-176)

SYMPTOM – ENGINE SOMETIMES STALLS

CHECK DIAGNOSIS SYSTEM
Check for output of diagnosis code.
(See page FI-25)

Malfunction code(s) →

Diagnostic codes
(See page FI-28 or 30)

Normal code ↓

(3S-GTE)
CHECK AIR FLOW METER
(See page FI-131)

BAD →

Air flow meter

OK ↓

CHECK WIRING CONNECTORS AND RELAYS
Check for signal change when the connector or relay is slightly tapped or wiggled.

BAD →

1. Connectors
2. EFI main relay (See page FI-156)
3. Circuit opening relay (See page FI-157)

SYMPTOM – ROUGH IDLING AND/MISSING

CHECK DIAGNOSIS SYSTEM
Check for output of diagnosis code.
(See page FI-25)

Malfunction code(s) →

Diagnostic codes
(See page FI-28 or 30)

Normal code ↓

CHECK FOR VACUUM LEAKS IN AIR INTAKE LINE

BAD →

1. Oil filler cap
2. Oil dipstick
3. Hose connections
4. PCV hose(s)
5. EGR system – EGR valve stays open

OK CONTINUED ON PAGE FI-17

OK CONTINUED FROM PAGE FI-16

CHECK AIR FILTER

BAD → Element – Clean or replace

OK

CHECK IDLE SPEED
Standard:
3S-GTE 800 ± 50 rpm
5S-FE 750 ± 50 rpm USA M/T
700 ± 50 rpm USA A/T
850 ± 50 rpm CANADA M/T
750 ± 50 rpm CANADA A/T

BAD →
1. ISC system
   (1) Wiring connection
   (2) ISC valve (See page FI-148 or 151)
   (3) ECU (test by substitution)
2. (5S-FE)
   Idle speed – Adjust
   (See page EM-20)

OK

CHECK IGNITION TIMING
1. Connect terminals TE1 and E1 of the check connector.
2. Check ignition timing.
   Standard: 10° BTDC @ idle

NO → Ignition timing – Adjust
(See page IG-17 or 22)

OK

CHECK SPARK PLUGS
Standard:
3S-GTE 0.8 mm (0.031 in.)
5S-FE 1.1 mm (0.043 in.)
HINT: Check compression pressure and valve clearance if necessary.

BAD →
1. Spark plugs (See page IG-6 or 11)
2. Compression pressure (See page EM-25)
   Minimum (at 250 rpm):
   3S-GTE 9.0 kg/cm²
   (128 psi, 883 kPa)
   5S-FE 10.0 kg/cm²
   (142 psi, 981 kPa)
3. Valve clearance (Cold)
   (See page EM-11 or 15)
   Standard:

3S-GTE	**IN**	**0.15 – 0.25 mm (0.006 – 0.010 in.)**
	EX	**0.20 – 0.30 mm (0.008 – 0.012 in.)**
5S-FE	**IN**	**0.19 – 0.29 mm (0.007 – 0.011 in.)**
	EX	**0.28 – 0.38 mm (0.011 – 0.015 in.)**

OK

(3S-GTE)
CHECK T-VIS VALVE
(See page EM-22)
Check that T-VIS valve is closed.

BAD →
1. T-VIS VSV (See page FI-163)
2. Vacuum leaks

OK

CHECK COLD START INJECTOR
(See page FI-99 or 102)

BAD →
1. Cold start injector
   (See page FI-99 or 102)
2. Cold start injector time switch
   (See page FI-158)

OK CONTINUED ON PAGE FI-18

OK CONTINUED FROM PAGE FI-17

CHECK FUEL PRESSURE
(See page FI-87)

BAD →
1. Fuel pump (See page FI-85)
2. Fuel filter
3. Fuel pressure regulator
(See page FI-105 or 107)

OK ↓

CHECK INJECTORS
(See page FI-110 or 120)

BAD → Injection condition

OK ↓

CHECK EFI ELECTRONIC CIRCUIT USING VOLT/OHMMETER
(See page FI-33)

BAD →
1. Wiring connections
2. Power to ECU
(1) Fusible links
(2) Fuses
(3) EFI main relay (See page FI-156)
3. (3S-GTE)
Air flow meter (See page FI-131)
4. (5S-FE)
Vacuum sensor (See page FI-170)
5. Water temp. sensor (See page FI-168)
6. Intake air temp. sensor
(See page FI-131 or 169)
7. Injection signal circuit
(1) Injector wiring
(2) ECU (See page FI-176)
8. Oxygen sensor (s)
(See page FI-173 or 175)

SYMPTOM – HIGH ENGINE SPEED (NO DROP)

HINT (5S-FE): Disconnecting the battery will cause the idling speed date in the ISC to be returned to the initial idling speed, causing the idling speed to rise above 750 rpm (USA M/T, CANADA A/T), 700 rpm (USA A/T), 850 rpm (CANADA M/T). Should this happen, either carry out a driving test, including stop-go several times at a speed above 10km/h, or start the engine, idle for 30 seconds and then turn the engine off repeatedly. By doing this, idle date will be stored in the ISC and the idle rpm will be at specified value.

CHECK ACCELERATOR LINKAGE

BAD → Linkage – Struck

OK ↓

CHECK FOR VACUUM LEAKS IN AIR INTAKE LINE

BAD →
1. Oil filler cap
2. Oil dipstick
3. Hose connections
4. PCV hose(s)
5. EGR system – EGR valve stays open

OK ↓

CHECK AIR CONDITIONER IDLE UP CIRCUIT

BAD → VSV for air conditioner – Leakage

OK ↓

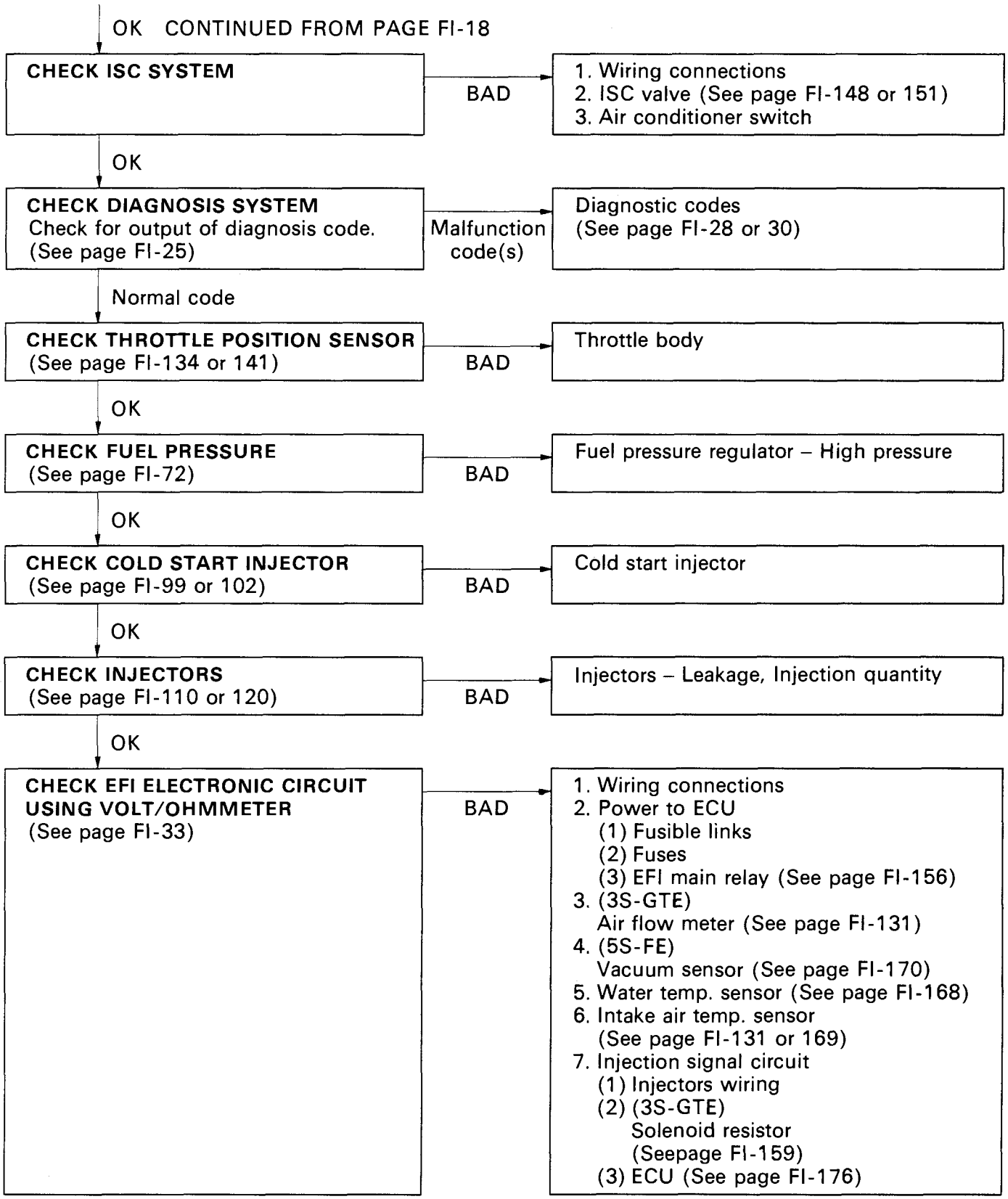
OK CONTINUED FROM PAGE FI-18
CHECK ISC SYSTEM
BAD
1. Wiring connections
2. ISC valve (See page FI-148 or 151)
3. Air conditioner switch
OK
CHECK DIAGNOSIS SYSTEM
Check for output of diagnosis code.
(See page FI-25)
Malfunction code(s)
Diagnostic codes
(See page FI-28 or 30)
Normal code
CHECK THROTTLE POSITION SENSOR
(See page FI-134 or 141)
BAD
Throttle body
OK
CHECK FUEL PRESSURE
(See page FI-72)
BAD
Fuel pressure regulator – High pressure
OK
CHECK COLD START INJECTOR
(See page FI-99 or 102)
BAD
Cold start injector
OK
CHECK INJECTORS
(See page FI-110 or 120)
BAD
Injectors – Leakage, Injection quantity
OK
CHECK EFI ELECTRONIC CIRCUIT USING VOLT/OHMMETER
(See page FI-33)
BAD
1. Wiring connections
2. Power to ECU
(1) Fusible links
(2) Fuses
(3) EFI main relay (See page FI-156)
3. (3S-GTE)
Air flow meter (See page FI-131)
4. (5S-FE)
Vacuum sensor (See page FI-170)
5. Water temp. sensor (See page FI-168)
6. Intake air temp. sensor
(See page FI-131 or 169)
7. Injection signal circuit
(1) Injectors wiring
(2) (3S-GTE)
Solenoid resistor
(Seepage FI-159)
(3) ECU (See page FI-176)

SYMPTOM – ENGINE BACKFIRES – Lean Fuel Mixture

CHECK DIAGNOSIS SYSTEM
Check for output of diagnosis code.
(See page FI-25)

Malfunction code(s) → Diagnostic codes (See pages FI-28 or 30)

Normal code ↓

CHECK FOR VACUUM LEAKS IN AIR INTAKE LINE

BAD →
1. oil filler cap
2. Oil dipstick
3. Hose connection(s)
4. PCV hose(s)
5. EGR system – EGR valve stays open

OK ↓

CHECK IGNITION TIMING
1. Connect terminals TE1 and E1 of the check connector.
2. Check ignition timing.
   Standard: 10° BTDC @ idle

NO → Ignition timing – Adjust (see page IG-17 or 22)

OK ↓

CHECK IDLE SPEED
Standard:

3S-GTE	**800 ± 50 rpm**
5S-FE	**750 ± 50 rpm USA M/T**
	700 ± 50 rpm USA A/T
	850 ± 50 rpm CANADA M/T
	750 ± 50 rpm CANADA A/T

BAD →
1. ISC system
   (1) Wiring connections
   (2) ISC valve (See page FI-148 or 151)
   (3) ECU (test by substitution)
2. (5S-FE)
   Idle speed – Adjust
   (See page EM-20)

OK ↓

CHECK COLD START INJECTOR
(See page FI-99 or 102)

BAD →
1. Cold start injector
   (See page FI-99 or 102)
2. Cold start injector time switch
   (See page FI-158)

OK ↓

CHECK FUEL PRESSURE
(See page FI-87)

BAD →
1. Fuel pump (See page FL-85)
2. Fuel filter
3. Fuel pressure regulator
   (See page FI-105 or 107)

OK ↓

CHECK INJECTORS
(See page FI-110 or 120)

BAD → Injector – Clogged

OK CONTINUED ON PAGE FI-21

OK CONTINUED FROM PAGE FI-20

CHECK EFI ELECTRONIC CIRCUIT USING VOLT/OHMMETER
(See page FI-33)

BAD →

1. Wiring connections
2. Power to ECU
   (1) Fusible links
   (2) Fuses
   (3) EFI main relay (See page FI-156)
3. (3S-GTE)
   Air flow meter (See page FI-131)
4. (5S-FE)
   Vacuum sensor (See page FI-170)
5. Water temp. sensor (See page FI-168)
6. Intake air temp. sensor
   (See page FI-131 or 169)
7. Throttle position sensor
   (See page FI-134 or 141)
8. injection signal circuit
   (1) Injector wiring
   (2) (3S-GTE)
      Solenoid resistor
      (See page FI-159)
   (3) ECU (See page FI-176)
9. Oxygen sensor(s)
   (See page FI-173 or 175)

SYMPTOM – MUFFLER EXPLOSION (AFTER FIRE) – Rich Fuel Misfire

CHECK DIAGNOSIS SYSTEM
Check for output of diagnosis code.
(See page FI-25)

Malfunction code(s) →

Diagnostic codes
(See pages FI-28 or 30)

Normal code ↓

CHECK IGNITION TIMING
1. Connect terminals TE1 and E1 of the check connector.
2. Check ignition timing.
   Standard: 10° BTDC @ idle

NO →

Ignition timing – Adjust
(See page IG-17 or 22)

OK ↓

CHECK IDLE SPEED
Standard:

3S-GTE	**800 ± 50 rpm**
5S-FE	**750 ± 50 rpm USA M/T**
	700 ± 50 rpm USA A/T
	850 ± 50 rpm CANADA M/T
	750 ± 50 rpm CANADA A/T

BAD →

1. ISC system
   (1) Wiring connection
   (2) ISC valve (See page FI-148 or 151)
   (3) ECU (test by substitution)
2. (5S-FE)
   Idle speed – Adjust
   (See page EM-20)

OK ↓

CHECK COLD START INJECTOR
(See page FI-99 or 102)

BAD →

1. Cold start injector
   (See page FI-99 or 102)
2. Cold start injector time switch
   (See page FI-158)

OK CONTINUED ON PAGE FI-22

OK CONTINUED FROM PAGE FI-21

CHECK FUEL PRESSURE
(See page FI-87)

BAD → Fuel pressure regulator
(See page FI-105 or 107)

OK

CHECK THROTTLE POSITION SENSOR
(See page FI-134 or 141)

BAD → Throttle body

OK

CHECK INJECTORS
(See page FI-110 or 120)

BAD → Injector – Leakage

OK

CHECK SPARK PLUGS
Standard:
3S-GTE 0.8 mm (0.031 in.)
5S-FE 1.1 mm (0.043 in.)
HINT: Check compression pressure and valve clearance if necessary.

NO →
1. Spark plugs (See page IG-6 or 11)
2. Compression pressure (See page EM-25)
   Minimum (at 250 rpm):
   3S-GTE 9.0 kg/cm^2 (128 psi, 883 kPa)
   5S-FE 10.0 kg/cm^2 (142 psi, 981 kPa)
3. Valve clearance (Cold)
   (See page EM-11 or 15)
   Standard:
   3S-GTE IN 0.15 – 0.25 mm (0.006 – 0.010 in.)
   EX 0.20 – 0.30 mm (0.008 – 0.012 in.)
   5S-FE IN 0.19 – 0.29 mm (0.007 – 0.011 in.)
   EX 0.28 – 0.38 mm (0.011 – 0.015 in.)

OK

CHECK EFI ELECTRONIC CIRCUIT USING VOLT/OHMMETER
(See page FI-33)

BAD →
1. Throttle position sensor
   (See page FI-134 or 141)
2. Injection signal circuit
   (1) Injector wirings
   (2) Fuel cut RPM (See page FI-182)
   (3) (3S-GTE)
   Solenoid resistor
   (See page FI-159)
   (4) ECU (See page FI-176)
3. Oxygen sensor(s)
   (See page FI-173 or 175)

SYMPTOM – ENGINE HESITATES AND/OR POOR ACCELERATION

CHECK CLUTCH OR BRAKES
→ BAD →
1. Clutch – Slips
2. Brakes – Drag

↓ OK

CHECK FOR VACUUM LEAKS IN AIR INTAKE LINE
→ BAD →
1. Oil filler cap
2. Oil dipstick
3. Hose connections
4. PCV hose(s)
5. EGR system – EGR valve stays open

↓ OK

CHECK AIR FILTER
→ BAD → Element – Clean or replace

↓ OK

CHECK DIAGNOSIS SYSTEM
Check for output of diagnosis code.
(See page FI-25)
→ Malfunction code(s) →
Diagnostic codes
(See page FI-28 or 30)

↓ Normal code

CHECK IGNITION SPARK
(See page IG-5 or 10)
→ BAD →
1. High-tension cords
2. Distributor
3. Ignition coil
4. Igniter

↓ OK

CHECK IGNITION TIMING
1. Connect terminals TE1 and E1 of the (check connector.
2. Check ignition timing.
   Standard: 10° BTDC @ idle

→ NO →
Ignition timing – Adjust
(See page IG-17 or 22)

↓ OK

CHECK FUEL PRESSURE
(See page FI-87)
→ BAD →
1. Fuel pump (See page FI-85)
2. Fuel filter
3. Fuel pressure regulator
   (See page FI-105 or 107)

↓ OK

CHECK INJECTORS
(See page FI-110 or 120)
→ BAD → Ingector – Clogged

↓ OK CONTINUED ON PAGE FI-24

OK CONTINUED FROM PAGE FI-23

CHECK SPARK PLUGS
Standard:
3S-GTE 0.8 mm (0.031 in.)
5S-FE 1.1 mm (0.043 in.)
HINT: Check compression pressure and valve clearance if necessary.

NO →

1. Spark plugs (See page IG-6 or 11)
2. Compression pressure (See page EM-25)
   Minimum (at 250 rpm):
   3S-GTE 9.0 kg/cm² (128 psi, 883 kPa)
   5S-FE 10.0 kg/cm² (142 psi, 981 kPa)
3. Valve clearance (Cold)
   (See page EM-11 or 15)
   Standard:
   3S-GTE IN 0.15 – 0.25 mm (0.006 – 0.010 in.)
   EX 0.20 – 0.30 mm (0.008 – 0.012 in.)
   5S-FE IN 0.19 – 0.29 mm (0.007 – 0.011 in.)
   EX 0.28 – 0.38 mm (0.011 – 0.015 in.)

OK ↓

(3S-GTE)
CHECK T-VIS VALVE
(See page EM-22)
Check if air control valve is open with engine running at 4,200 rpm above.

BAD →

1. T-VIS VSV (See page FI-163)
2. Vacuum leaks

OK ↓

CHECK EFI ELECTRONIC CIRCUIT USING VOLT/OHMMETER
(See page FI-33)

BAD →

1. Wiring connections
2. Power to ECU
   (1) Fusible links
   (2) Fuses
   (3) EFI main relay (See page FI-156)
3. (3S-GTE)
   Air flow meter (See page FI-131)
4. (5S-FE)
   Vacuum sensor (See page FI-170)
5. Water temp. sensor (See page FI-168)
6. Intake air temp. sensor
   (See page FI-131 or 169)
7. Throttle position sensor
   (See page FI-134 or 141)
8. Injection signal circuit
   (1) Injector wiring
   (2) (3S-GTE)
   Solenoid resistor
   (See page FI-159)
   (3) ECU (See page FI-176)

DIAGNOSIS SYSTEM

DESCRIPTION

The ECU contains a built-in, self-diagnosis system detects which troubles within the engine signal network and then flashed a warning on the "CHECK" engine warning light on the instrument panel flashes.

By analyzing various signals shown in the tables (See page 28 or 30) the ECU detects system malfunctions which are related to the various operating parameter sensors or actuator. The ECU stores the failure code associated with the detected failure until the diagnosis system is cleared by removing the EFI fuse with the ignition switch OFF.

A "CHECK" engine warning light on the instrument panel informs the driver that a malfunction has been detected. The light goes off automatically when the malfunction has been cleared.

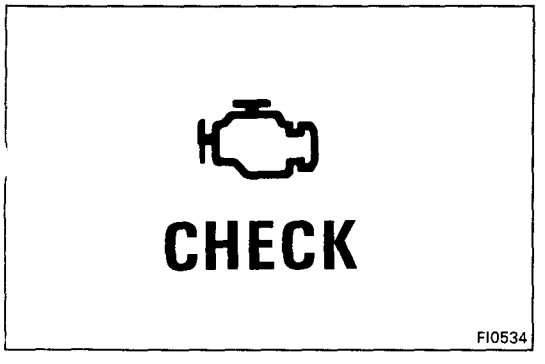

"CHECK" ENGINE WARNING LIGHT CHECK

1. The "CHECK" engine warning light will come on when the ignition switch is placed at ON and the engine is not running.
2. When the engine is started, the "CHECK" engine warning light should go off.

   If the light remains on, the diagnosis system has detected a malfunction or abnormality in the system.

OUTPUT OF DIAGNOSTIC CODES

To obtain an output of diagnostic codes, proceed as follows:

1. Initial conditions
   (a) Battery voltage 11 V or more
   (b) Throttle valve fully closed (throttle position sensor IDL points closed)
   (c) Transmission in neutral position
   (d) Accessories switched OFF
   (e) Engine at normal operating temperature
2. Turn the ignition switch to ON. Do not start the engine.
3. Using SST, connect terminals TE1 and E1 of the check connector.

   SST 09843-18020

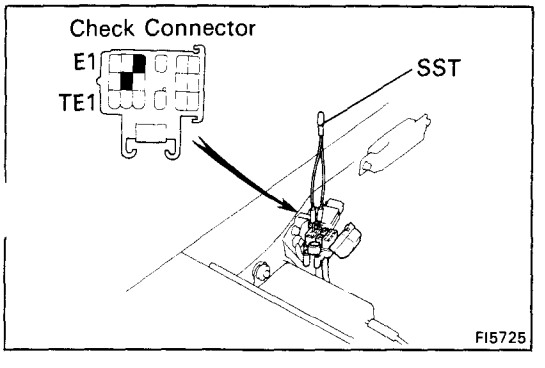

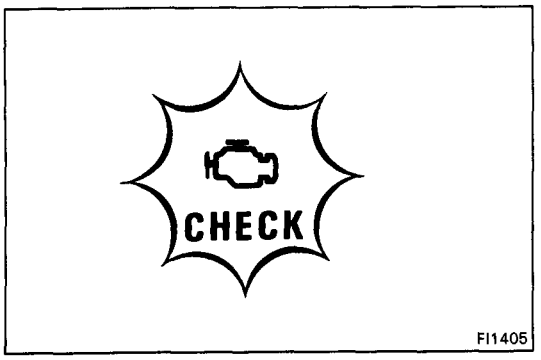

4. Read the diagnostic code as indicated by the number of flashes of the "CHECK" engine warning light.

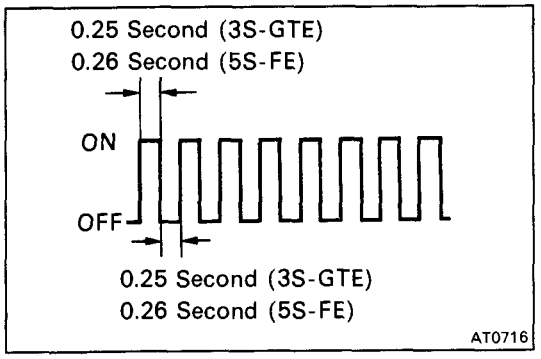

Diagnostic Codes (See page FI-28 or 30)

(a) Normal System Operation (no malfunction)

- The light will alternately blink ON and OFF 2 times per second.

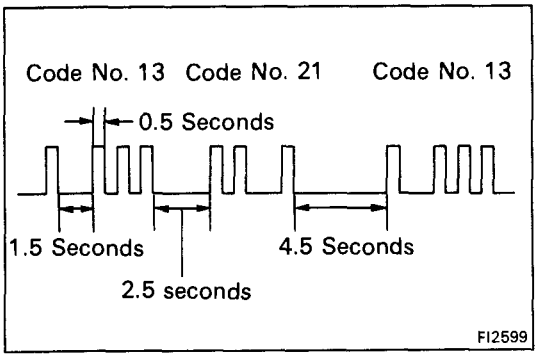

(b) Malfunction Code Indication

- In the event of a malfunction, the light will blink every 0.5 seconds. The first number of blinks will equal the first digit of a 2-digit diagnostic code and, after a 1.5 second pause, the 2nd number of blinks will equal the 2nd. If there are two or more codes, there will be a 2.5 second pause between each.
- After all the codes have been signalled there will be a 4.5 second pause and they will all be repeated as long as the terminals TE1 and E1 of the check connector are shorted.

HINT: In the event of a number of trouble codes, indication will begin from the smaller value and continue in order to the larger.

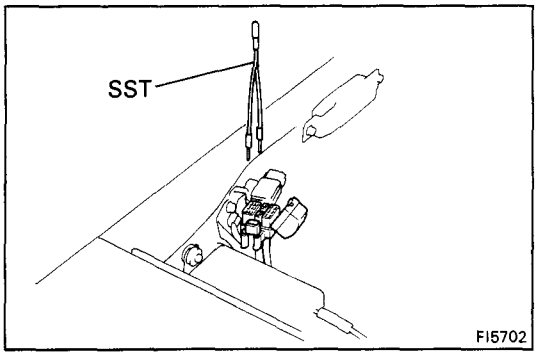

5. After the diagnostic check, remove the SST.
SST 09843-18020

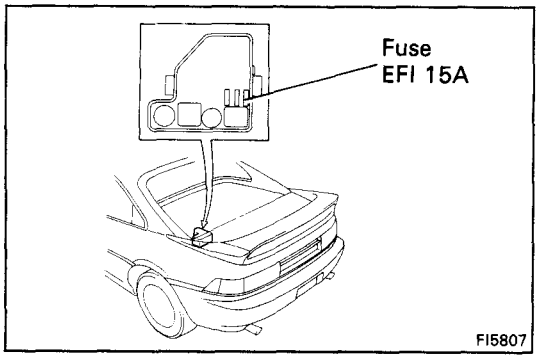

CANCELLING DIAGNOSTIC CODE

1. After repair of the trouble area, the diagnostic code retained in memory by the ECU must be cancelled out by removing the fuse "EFI 15A" for 10 seconds or more, depending on ambient temperature (the lower the temperature, the longer the fuse must be left out) with the ignition switch OFF.

   HINT:
   - Cancellation can also be done by removing the battery negative (–) terminal, but in this case, other memory systems (clock, etc.) will also be cancelled out.
   - If the diagnostic code is not cancelled out, it will be retained by the ECU and appear along with a new code in the event of future trouble.
   - If it is necessary to work on engine components requiring removal of the battery terminal, a check must first be made to see if a diagnostic code has been recorded.

2. After cancellation, perform road test of the vehicle to check that a normal code is now read on the "CHECK" engine warning light.

   If the same diagnostic code appears, it indicates that the trouble area has not been repaired thoroughly.

DIAGNOSIS INDICATION

1. When 2 or more codes are indicated, the lowest number (code) will appear first.

2. All detected diagnostic codes, except code No.51, and No.53 will be retained in memory by the ECU from the time of detection until cancelled out.

3. Once the malfunction is cleared, the "CHECK" engine warning light on the instrument panel will go off but the diagnostic code(s) remain stored in ECU memory (except for code No.51 and No.53).

DIAGNOSTIC CODES (3S-GTE)

Code No.	Number of Engine blinks	System	Diagnosis	Trouble area	See page
–	ON OFF FI1401	Normal	This appears when none of the other codes are identified.	–	–
12	FI1389	RPM Signal	No NE or G signal to ECU within 2 seconds after engine has been cranked.	●● Distributor circuit ●● Distributor ●● Starter signal circuit ●● ECU	IG-4
13	FI1390	PRM Signal	No NE signal to ECU when engine speed is above 1,000 rpm.	●● Distributor ignition coil ●● Distributor ●● ECU	–
14	FI1391	Ignition Signal	No IGF signal to ECU 8 – 11 times in succession.	●● Igniter and ignition coil circuit ●● Igniter and ignition coil ●● ECU	FI-45
21	FI1400	Oxygen Sensor Signal	During air-fuel ration feedback correction, voltage output from the oxygen sensor does not exceed a set value on the lean side and the rich side continuously for a certain period.	●● Oxygen sensor circuit ●● Oxygen sensor ●● ECU	FI-50
		Oxygen Sensor Heater Circuit	Open or short circuit in oxygen sensor heater.	● Oxygen sensor heater circuit ● Oxygen sensor heater ● ECU	FI-50
22	FI1392	Water Temp. Sensor Signal	Open or short circuit in water temp. sensor signal (THW).	● Water temp. sensor circuit ● Water temp. sensor ● ECU	FI-43
24	FI1611	Intake Air Temp. Sensor Signal	Open or short circuit in intake air temp. sensor signal (THA).	●● Intake air temp. sensor circuit ●● Intake air temp. sensor ●● ECU	FI-42
25	FI2562	Air-fuel Ratio Lean Malfunction	●● When air-fuel ratio feedback correction valve or adaptive control value continued at the upper (lean) or lower (rich) limit renewed for a certain period of time. ●● When air-fuel ration feedback correction value or adaptive control value feedback frequency is abnormally high during feedback condition. ●● Open or short circuit in oxygen sensor signal.	●● Injector circuit ●● Injector ●● Oxygen sensor circuit ●● ECU ●● Fuel line pressure ●● Air flow meter ●● Air intake system ●● Ignition system	–
26	FI2563	Air-fuel Ration Rich Malfunction		●● Injector circuit ●● Injector ●● Fuel line pressure ●● Cold start injector ●● Air flow meter ●● ECU	–
31	FI1394	Air-flow Meter Signal	Open circuit in VC signal or short circuit between VC and E2 when idle contacts are closed.	●● Air flow meter circuit ●● Air flow meter ●● ECU	FI-40
32	FI1395	Air-flow Meter Signal	Open circuit in E2 or short circuit between VC and VS.	●● Air flow meter circuit ●● Air flow meter ●● ECU	FI-40

DIAGNOSTIC CODES (3S-GTE) (Cont'd)

Code No.	Number of Engine blinks	System	Diagnosis	Trouble area	See page
34	FI3047	Turbocharging Pressure Signal	Excessive turbocharging pressure.	● Turbocharger ● Turbocharging pressure sensor circuit ● Turbocharging pressure sensor ● ECU	–
35	FI3048	Turbocharging Pressure Sensor Signal	Open or short circuit in turbocharging sensor pressure sensor signal (PIM).	● Turbocharging pressure sensor circuit ● Turbocharging pressure sensor ● ECU	FI-48
41	FI1396	Throttle Position Sensor Signal	Open or short circuit in throttle position sensor signal (VTA).	● Throttle position sensor circuit ● Throttle position sensor ● ECU	FI-38
42	FI1397	Vehicle Speed Sensor Signal	No SPD signal for 8 seconds when engine speed is between 2,500 rpm and 5,000 rpm and coolant temp. is below 80°C (176°F) except when racing the engine.	●Vehicle speed sensor circuit ● Vehicle speed sensor ● ECU	–
43	FI1398	Starter Signal	No STA signal to ECU unit engine speed reaches 800 rpm with vehicle not moving.	● Ignition switch circuit ● Ignition switch ● ECU	FI-44
52	FI1618	Knock Sensor Signal	Open or short circuit in knock sensor signal (KNK).	● Knock sensor circuit ● Knock sensor ● ECU	–
53	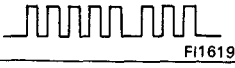 FI1619	Knock Control Signal in ECU	Knock control in ECU faulty	● ECU	–
71	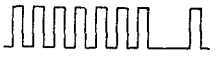 FI2622	EGR Malfunction (CALIF. only)	EGR gas temp. below predetermined level for during EGR control.	● EGR system (EGR valve, EGR hose etc.) ● EGR gas temp. sensor circuit ● EGR gas temp. sensor ● EGR control VSV ● EGR control VSV circuit ● ECU	FI-51
51	FI1399	Switch Condition Signal	No IDL signal or A/C signal to ECU, with the check terminals TE1 and E1 connected.	● A/C switch circuit ● A/C amplifire ● Throttle position sensor circuit ● Throttle position sensor ● Accelerator pedal and cable ● ECU	–

DIAGNOSTIC CODES (5S-FE)

Code No.	Number of "CHECK" engine blinks	System	Diagnosis	Trouble area	See page
–	FI1401	Normal	This appears when none of the other codes are identified.	–	–
12	FI1389	RPM Signal	No NE or G signal to ECU within several seconds after engine is cranked.	● Distributor circuit ● Distributor ● Starter signal circuit ● ECU	IG-4
13	FI1390	RPM Signal	No NE signal to ECU when the engine speed is above 1,000 rpm and within 50 msec. after engine is cranked.	● Distributor circuit ● Distributor ● ECU	–
14	FI1391	Ignition Signal	No IGF signal to ECU 4 – 5 times in succession.	● Ignition circuit (+B, IGT, IGF) ● Igniter ● ECU	FI-62 or FI-79
21	FI1609	Oxygen Sensor Signal	During air-fuel ratio feedback correction, voltage output from the oxygen sensor does not exceed a set value on the lean side and the rich side continuously for a certain period.	● Oxygen sensor circuit ● Oxygen sensor ● ECU	FI-66 or FI-83
22	FI1392	Water temp. Sensor Signal	Open or short circuit in water temp. sensor signal (THW).	● Water temp. sensor circuit ● Water temp. sensor ● ECU	FI-60 or FI-77
24	FI1611	Intake air Temp. Sensor Signal	Open or short circuit in intake air temp. sensor signal (THA).	● Intake air temp. sensor circuit ● Intake air temp. sensor ● ECU	FI-59 or FI-76
25	FI2562	Air-fuel Ratio Lean Malfunction	● When FAF (Air fuel compensation ratio) is not removed for a certain period during feedback condition. ● When marked variation is detected in engine revolutions for each cylinder during idle switch on and feedback condition. ● Open or short circuit in oxygen sensor signal.	● Injector circuit ● Injector ● Oxygen sensor circuit ● Oxygen sensor ● ECU ● Fuel line pressure ● Vacuum sensor ● Water temp. sensor ● Ignition system ● ECU	–
26	FI2563	Air-fuel Ratio Rich Malfunction		● Injector circuit ● Injector ● Fuel line pressure ● Cold start injector ● Vacuum sensor ● Water temp. sensor ● ECU	–
*27	FI3294	Sub-Oxygen Sensor Signal	Open or short circuit in sub-oxygen sensor signal (OX2).	● Sub-oxygen sensor circuit ● Sub-oxygen sensor ● ECU	FI-66 or FI-83
31	FI1394	Vacuum Sensor Signal	Open or short circuit in vacuum sensor signal.	● Vacuum sensor circuit ● Vacuum sensor ● ECU	FI-57 or FI-74

* CALIF. only

DIAGNOSTIC CODES (5S-FE) (Cont'd)

Code No	Number of "CHECK" engine blinks	System	Diagnosis	Trouble area	See page
41	FI1396	Throttle Position Sensor Signal	(M/T) IDL and PSW signals being output simultaneously for several seconds. (A/T) Open or short circuit in throttle position sensor signal (VTA).	● Throttle position sensor circuit ● Throttle position sensor ● ECU	FI-56 or FI-72
42	FI1397	Vehicle Speed Sensor Signal	(M/T) No pulse is input from the speed sensor (SP1) bult into the meter during input of a 4-pulse signal from the vehicle speed sensor (SP2) on the transmission (A/T) No SPD signal for several seconds when engine speed is between 2,300 – 5,500 rpm and coolant temp. is below 80°C (176°F) except when racing the engine.	● Vehicle speed sensor circuit ● Vehicle speed sensor ● ECU	–
43	FI1398	Starter Signal	No STA signal to ECU until engine speed reaches 800 rpm with vehicle not moving.	● IG switch circuit ● IG switch ● ECU	FI-61 or FI-78
71	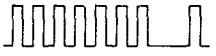 FI2622	EGR Malfunction	EGR gas temp. below 70°C during EGR operation.	● EGR system (EGR valve, EGR hose etc.) ● EGR gas temp. sensor circuit ● EGR gas temp. sensor ● BVSV for EGR ● BVSV for EGR circuit ● ECU	FI-67 or FI-84
51	FI1399	Switch Condition Signal	No IDL signal, NSW signal and STA signal or A/C ON signal to ECU, when the check terminals TE1 and E1 connected with 3 seconds after engine has been cranking.	● A/C switch circuit ● A/C Amplifire ● Throttle position sensor circuit ● Throttle position sensor ● Neutral start switch circuit ● Neutral start switch ● Accelerator pedal and cable ● ECU	–

INSPECTION OF DIAGNOSIS CIRCUIT

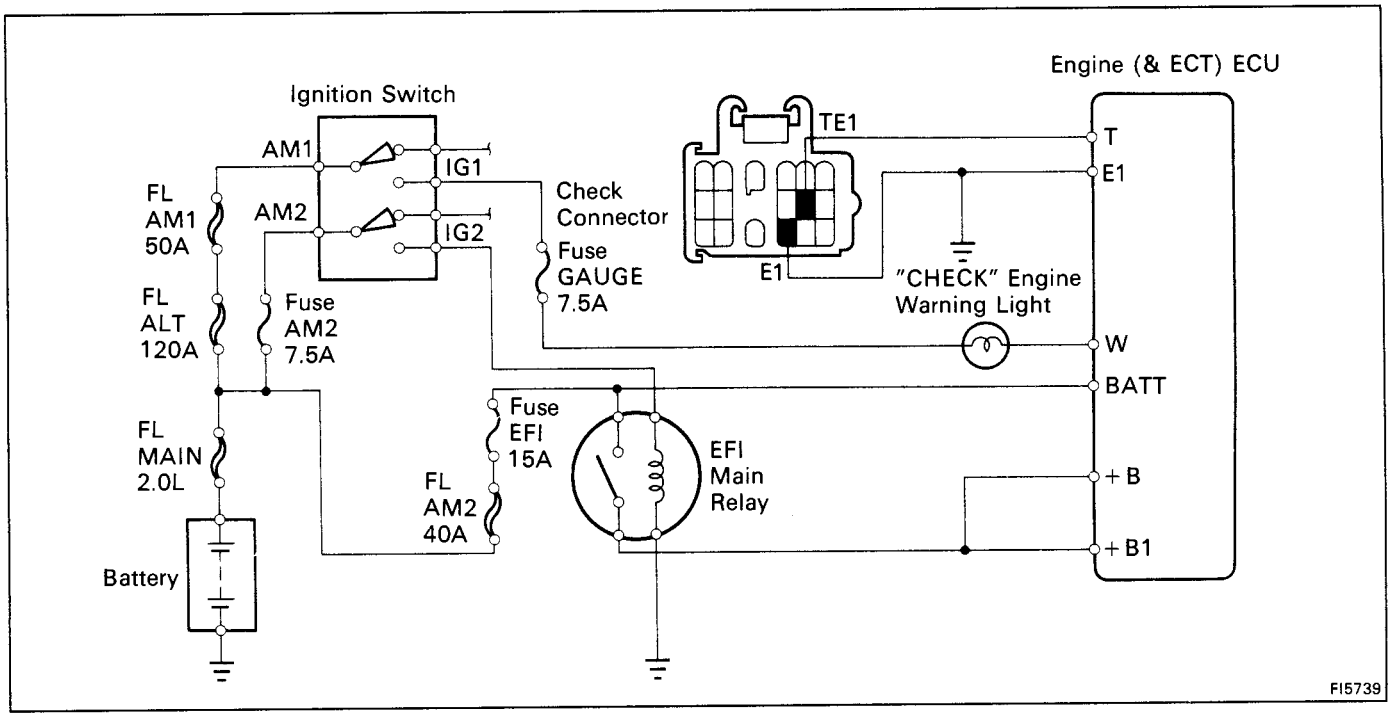

1. Does "CHECK" engine warning light come on when ignition switch is at ON?
   - YES → System Normal
   - NO ↓
2. Does "CHECK" engine warning light come on when ECU terminal W is grounded to the body.
   - YES → Check wiring between ECU terminal E1 and body ground.
     - OK → Try another ECU.
     - BAD ↓ Repair or replace.
   - NO ↓
3. Check bulb, fuse and wiring between ECU and ignition switch.
   - BAD ↓ Repair or replace.

2. Does "CHECK" engine warning light go off when the engine is started?
   - YES → System Normal
   - NO ↓
3. Check wiring between ECU and "CHECK" engine warning light.
   - BAD → Repair.
   - OK ↓
4. Is there diagnostic code output when check connector terminal TE1 and E1 are short circuited?
   - NO → Try another ECU.
   - YES ↓
5. Does "CHECK" engine warning light go out after repair according to malfunction code?
   - NO → Further repair required.
   - YES ↓
6. System OK → Cancel out diagnostic code.

TROUBLESHOOTING WITH VOLT/OHMMETER

HINT:

- The following troubleshooting procedures are designed for inspection of each separate system, and therefore the actual procedure may vary somewhat. However, troubleshooting should be performed while referring to the inspection methods described in this manual.
- Before beginning inspection, it is best to first make a simple check of the fuses, fusible links and the condition of the connectors.
- The following troubleshooting procedures are based on the supposition that the trouble lies in either a short or open circuit in a components outside the computer or a short circuit within the computer.
- If engine trouble occurs even though proper operating voltage is detected in the computer connector, then it can be assumed that the ECU is faulty and should be replaced.

LOCATION OF FUSES AND FUSIBLE LINKS

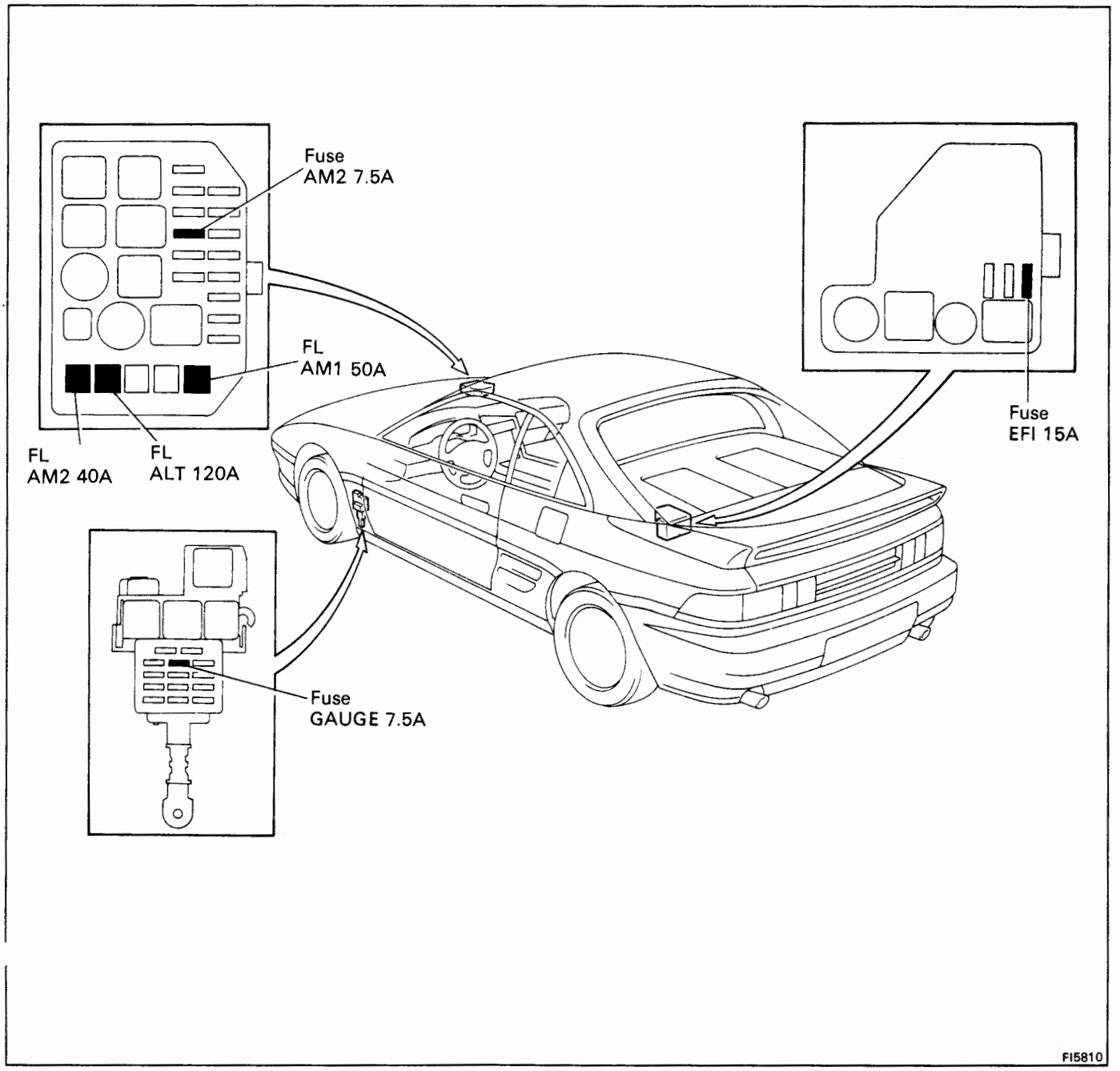

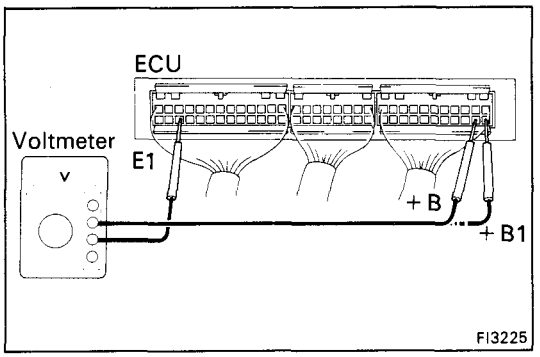

EFI SYSTEM CHECK PROCEDURE (3S-GTE)

HINT:

- Perform all voltage measurements with the connectors disconnected.
- Verify that the battery voltage is 11 V or more when the ignition switch is in "ON" position.

Using a voltmeter with high impedance (10 kΩ/V minimum), measure the voltage at each terminal of the wiring connectors.

Terminals of ECU

Symbol	Terminal	Symbol	Terminal	Symbol	Terminal
E01	POWER GROUND	G2	DISTRIBUTOR	AC1	A/C MAGNET SWITCH
E02	POWER GROUND	G1	DISTRIBUTOR		–
No. 1	INJECTOR (No. 1)	NE	DISTRIBUTOR	SPD	SPEED SENSOR
No. 3	INJECTOR (No. 3)	E1	ENGINE GROUND		–
No. 2	INJECTOR (No. 2)	VF	CHECK CONNECTOR	ABS	ABS ECU
No. 4	INJECTOR (No. 4)	G ⊖	DISTRIBUTOR		–
STJ	COLD START INJECTOR		–		–
EGR	EGR VALVE	T	CHECK CONNECTOR		–
RSC	ISC VALVE	OX1	OXYGEN SENSOR (MAIN)	FPR	FUEL PUMP RELAY
RSO	ISC VALVE	OX2	SUB-OXYGEN SENSOR		–
HT	OXYGEN SENSOR HEATER	KNK	KNOCK SENSOR	W	WARNING LIGHT
	–	PIM	TURBOCHARGING PRESSURE SENSOR		–
	–	THW	WATER TEMP. SENSOR	STP	STOP LIGHT SWITCH
IGT	IGNITER	IDL	THROTTLE POSITION SENSOR	PS	POWER STEERING ECU
TPC1	TURBOCHARGING PRESSURE VSV	THA1	INTAKE AIR TEMP. SENSOR (AIR FLOW METER)		–
	–	VTA	THROTTLE POSITION SENSOR	PSCT	POWER STEERING ECU
	–	VS	AIR FLOW METER	ELS	HEADLIGHT SWITCH DEFOGGER SWITCH
TVIS	T-VIS VSV	THG	EGR GAS TEMP. SENSOR	+B1	EFI MAIN RELAY
	–	VC	SENSOR POWER SOURCE	BATT	BATTERY
FC	CIRCUIT OPENING RELAY	E2	SENSOR GROUND	+B	EFI MAIN RELAY
IGF	IGNITER	STA	STARTER SWITCH		
	–		–		

Engine ECU Terminals

*CALIF. only

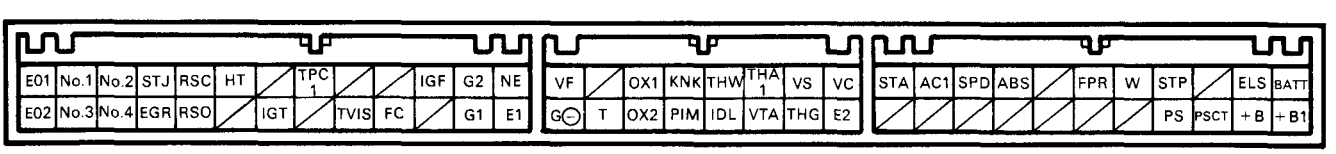

FI2796

Voltage at ECU Wiring Connectors

No.	Terminal	Condition		STD voltage (V)	See page
1	+B, +B1 – E1	IG SW ON		10 – 14	FL-36
2	BATT – E1	–		10 – 14	FI-37
3	IDL – E2	IG SW ON	Throttle valve open	4 – 6	FI-38
	VC – E2		–	4 – 6	
	VTA – E2		Throttle valve fully closed	0.1 – 1.0	
			Throttle valve fully open	3.2 – 4.2	
4	VC – E2		–	4 – 6	FI-40
	VS – E2		Measuring plate fully closed	3.7 – 4.3	
			Measuring plate fully open	0.2 – 0.5	
		Idling (No load)		2.6 – 3.6	
		3,000 rpm (No load)		1.0 – 2.0	
5	No.1, No.2, No.3, No.4 – E01, E02	IG SW ON		10 – 14	FI-41
6	THA1 – E2	IG SW ON	Intake air temp. 20°C (68°F)	1 – 3	FI-42
7	THW – E2		Coolant temp. 80°C (176°F)	0.1 – 1.1	FI-43
8	STA – E1	Cranking		6 – 14	FI-44
9	IGT – E1	Cranking or idling		0.8 – 1.2	FI-45
10	RSC, RSO – E1	IG SW ON		8 – 14	FI-46
11	W – E1	No trouble (check engine warning light off) and engine running		10 – 14	FI-47
12	PIM – E2	IG SW ON		2.5 – 4.5	FI-48
	VC – E2			4 – 6	
13	AC1 – E1	IG SW ON	Air conditioning ON	8 – 14	FI-49

Engine ECU Terminals

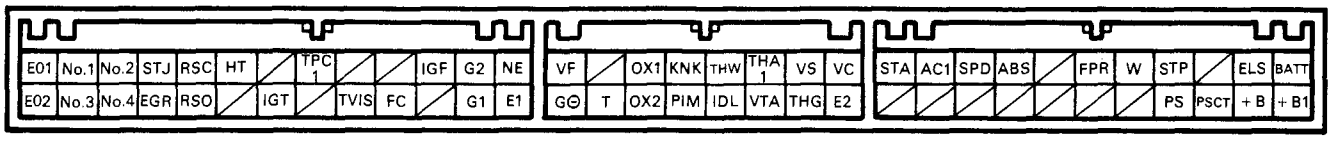

FI2796

No.	Terminals	Trouble	Condition	STD voltage
1	+B +B1 – E1	No voltage	IG SW ON	10 – 14 V

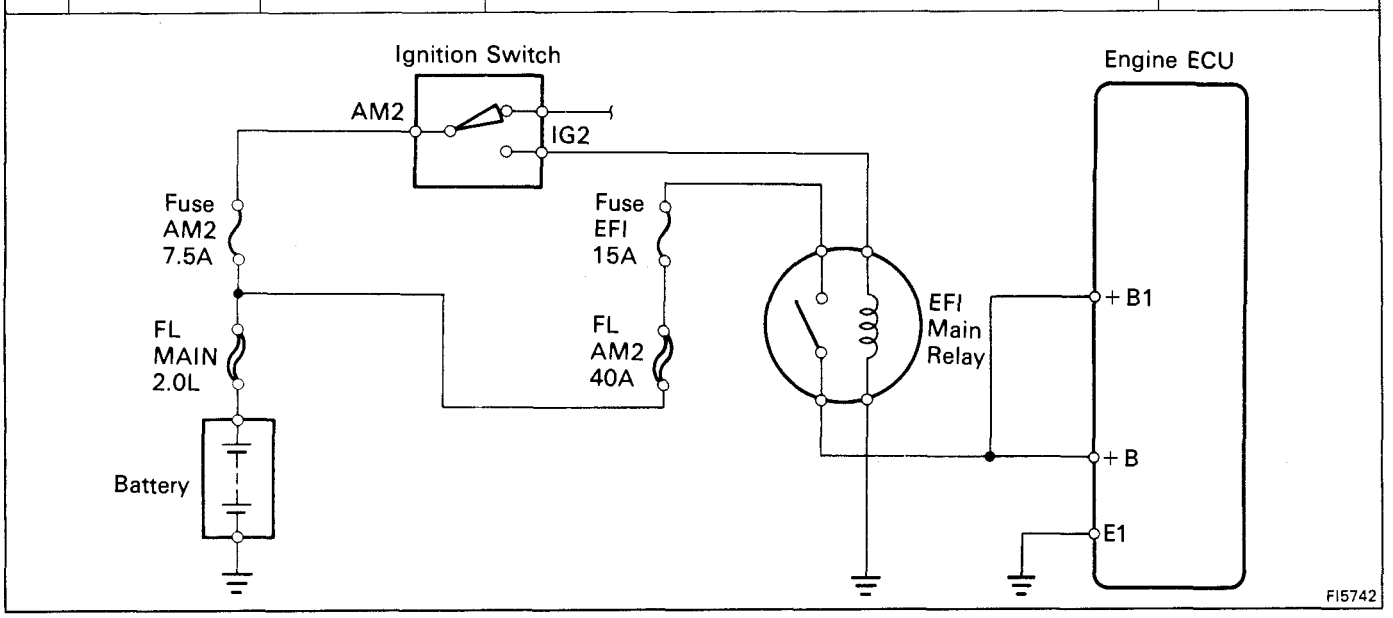

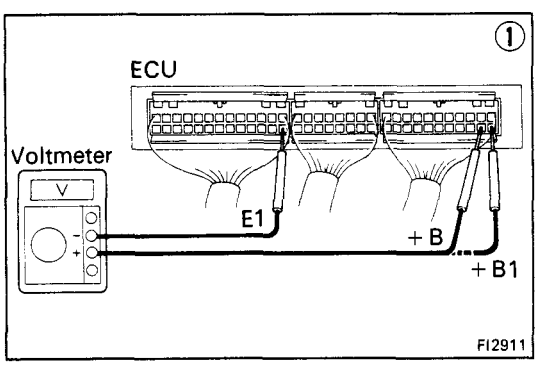

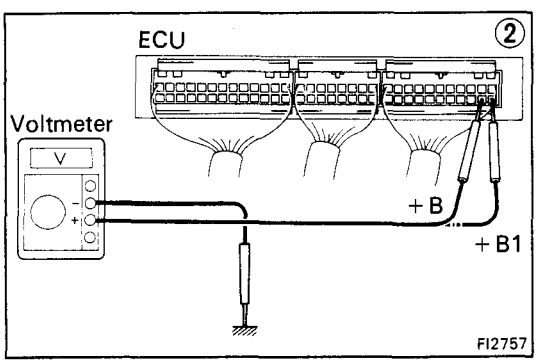

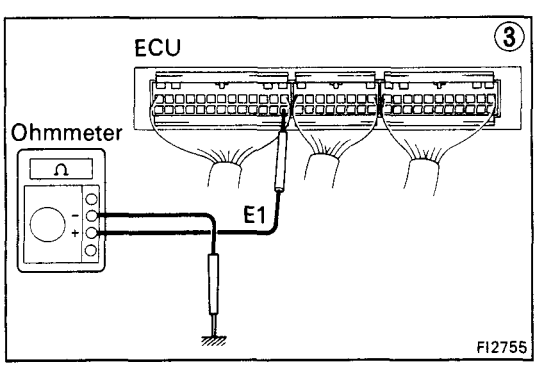

① There is no voltage between ECU terminals +B or +B1 and E1. **(IG SW ON)**

↓

② Check that there is voltage between ECU terminal +B or +B1 and body ground. **(IG SW ON)**

- NO → Check fuses, fusible links and ignition switch.
- OK → ③ Check wiring between ECU terminal E1 and body ground.
  - OK → Try another ECU.
  - BAD → Repair or replace.

Check fuses, fusible links and ignition switch.
- BAD → Repair or replace.
- OK ↓

Check EFI main relay. (See page FI-156)
- BAD → Replace.
- OK ↓

Check wiring between EFI main relay and battery.
- BAD → Repair or replace.

No.	Terminals	Trouble	Condition	STD voltage
2	BATT – E1	No voltage	–	10 – 14 V

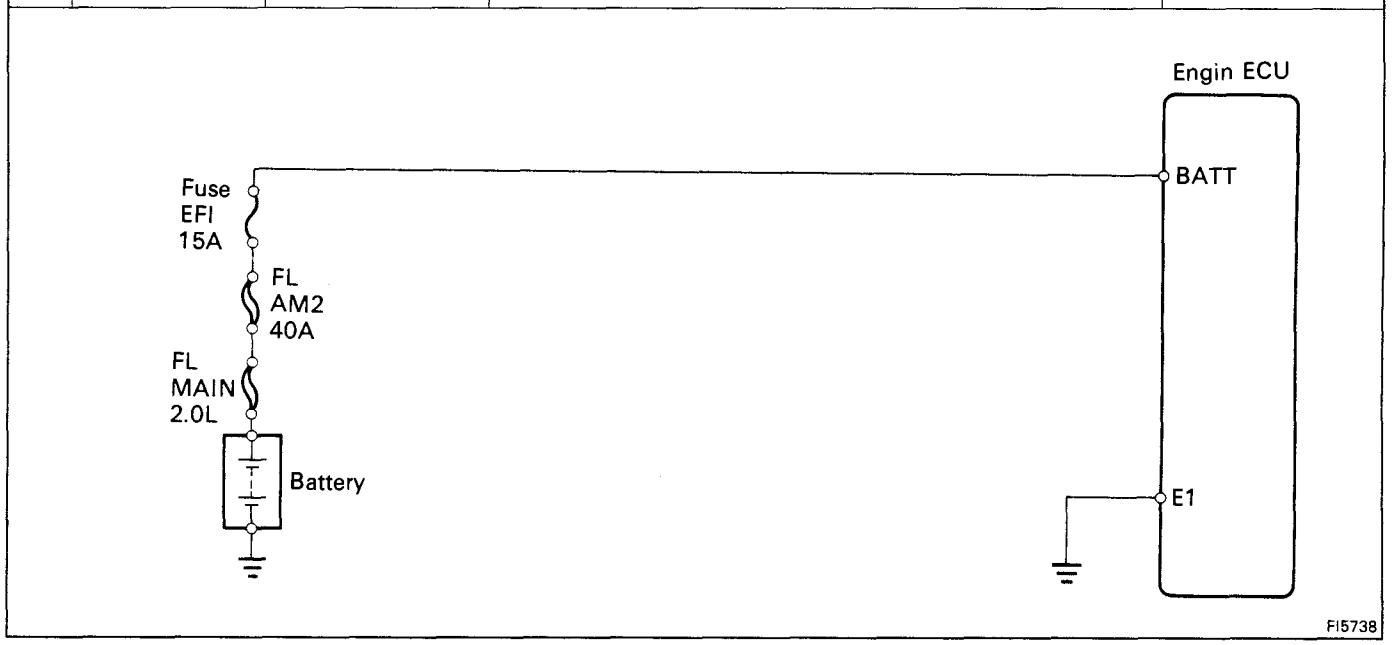

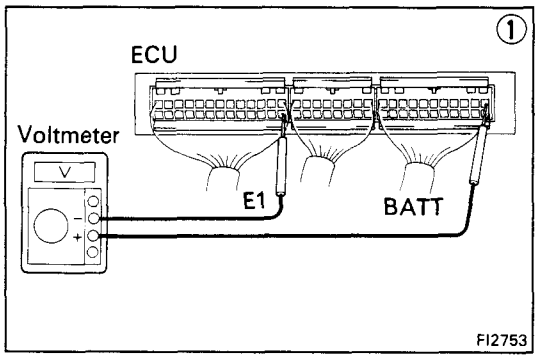

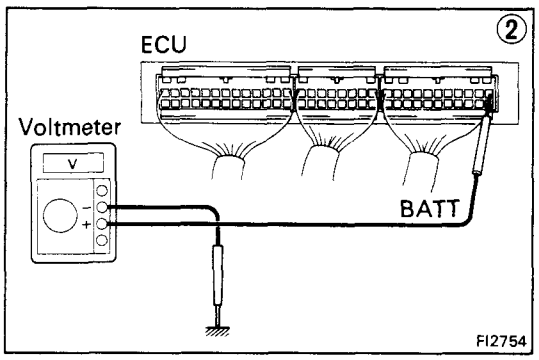

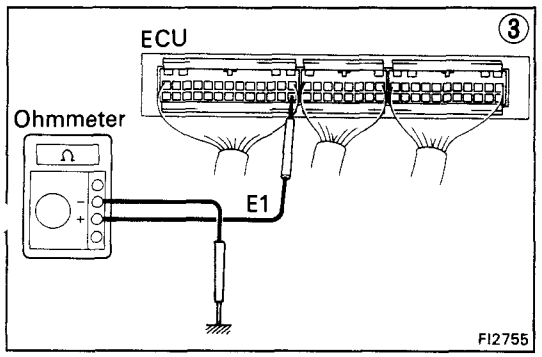

① There is no voltage between ECU terminals BATT and E1.

↓

② Check that there is voltage between ECU terminal BATT and body ground.

- NO → Check fuse and fusible links.
- OK → ③ Check wiring between ECU terminal E1 and body ground.
  - OK → Try another ECU.
  - BAD → Repair or replace.

Check fuse and fusible links.
- BAD → Replace.
- OK → Check wiring between ECU terminal and battery.
  - BAD → Repair or replace.

No.	Terminals	Trouble	Condition		STD voltage
3	IDL – E2	No voltage	IG SW ON	Throttle valve open	8 – 14 V
	VC – E2			–	4 – 6 V
	VTA – E2			Throttle valve fully closed	0.7 – 1.0 V
				Throttle valve fully open	3.2 – 4.2 V

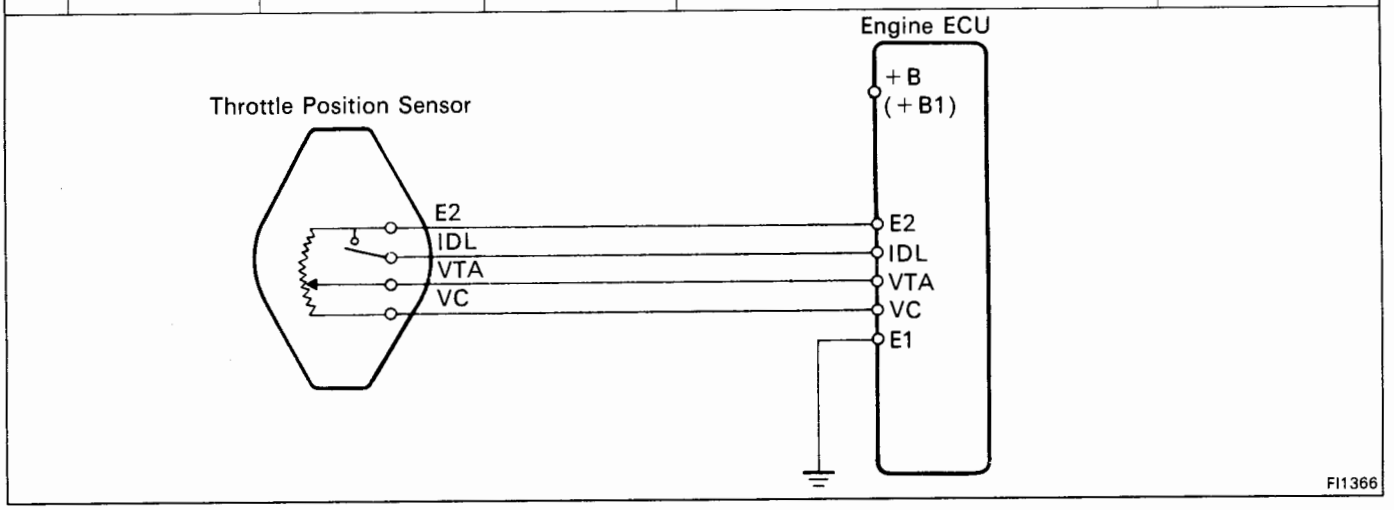

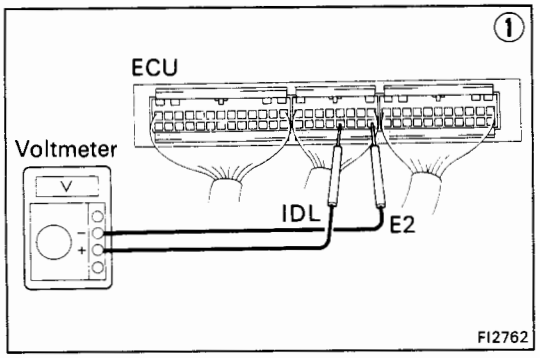

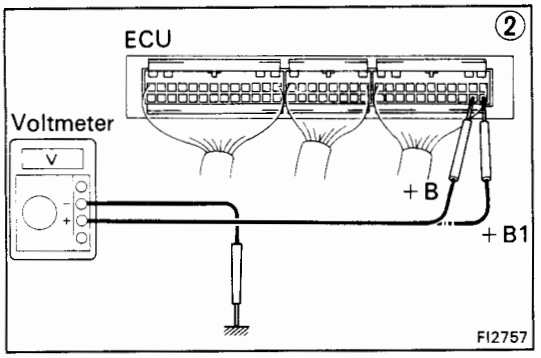

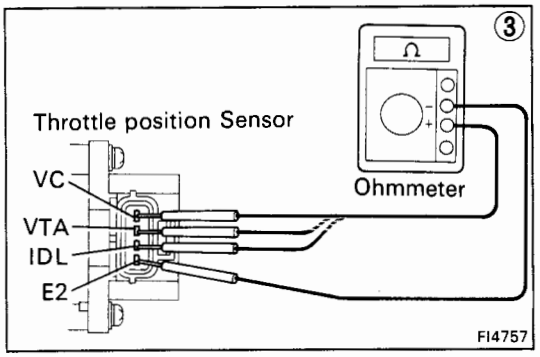

● **IDL – E2**

① There is no voltage between ECU terminals IDL and E2. **(IG SW ON)** (Throttle valve open)

② Check that there is voltage between ECU terminal ECU terminal +B (+B1) and body ground. **(IG SW ON)**

- NO → Refer to No.1. (See page FI-36)
- OK → Check wiring between ECU terminal E1 and body ground.
  - OK → Try another ECU.
  - BAD → Repair or replace.

Refer to No.1. (See page FI-36)
- BAD → Repair or replace.
- OK → ③

③ Check throttle position sensor. (See page FI-134)
- BAD → Repair or replace throttle position sensor.
- OK → Check wiring between ECU and throttle position sensor.
  - OK → Try another ECU.
  - BAD → Repair or replace.

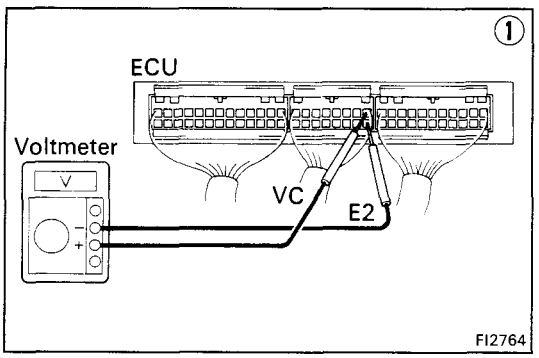

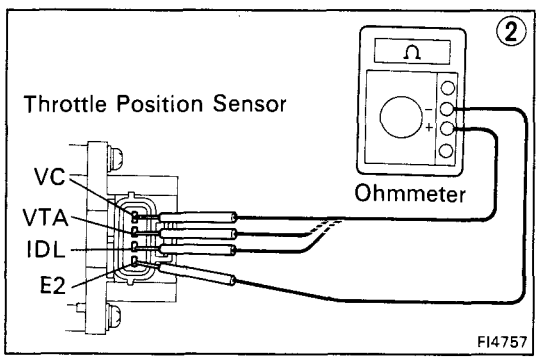

● **VC – E2**

① There is no voltage between ECU terminals VC and E2. **(IG SW ON)**

↓

Check that there is voltage between ECU terminal +B (+B1) and body ground. **(IG SW ON)**

- OK → ② Check throttle position sensor. (See page FI-134)
  - BAD → Repair or replace.
  - OK → Check wiring between ECU and throttle position sensor.
    - OK → Try another ECU.
    - BAD → Repair or replace wiring.
- NO → Refer to No.1. (See page FI-36)

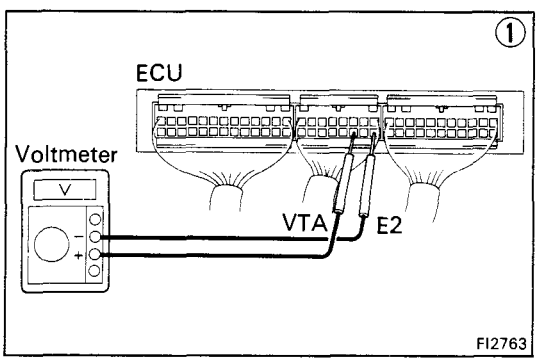

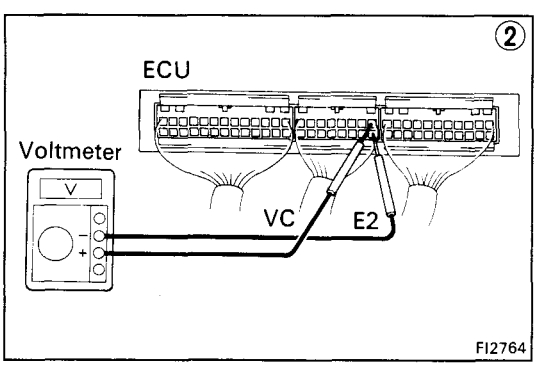

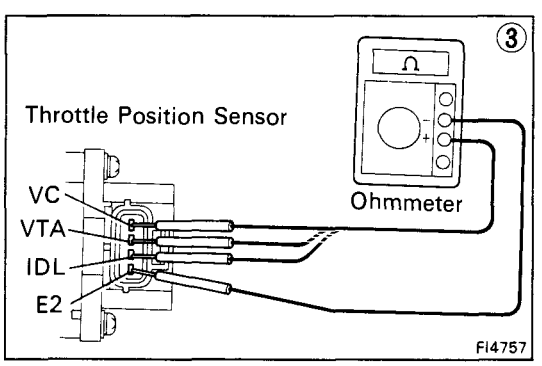

● **VTA – E2**

① There is no specified voltage at ECU terminals VTA and E2. **(IG SW ON)**

↓

② Check that there is voltage between ECU terminals VC and E2. **(IG SW ON)**

- NO → Refer to VC – E2 trouble section.
  - OK → ③
- OK → ③ Check throttle position sensor. (See page FI-134)
  - BAD → Repair or replace.
  - OK → Check wiring between ECU and throttle position sensor.
    - BAD → Repair or replace.
    - OK → Try another ECU.

No.	Terminals	Trouble	Condition		STD voltage
4	VC – E2	No voltage	IG SW ON	–	4 – 6 V
	VS – E2			Measuring plate fully closed	3.7 – 4.3 V
				Measuring plate fully open	0.2 – 0.5 V
			Idling (No load)		2.6 – 3.6 V
			3,000 rpm (No load)		1.0 – 2.0 V

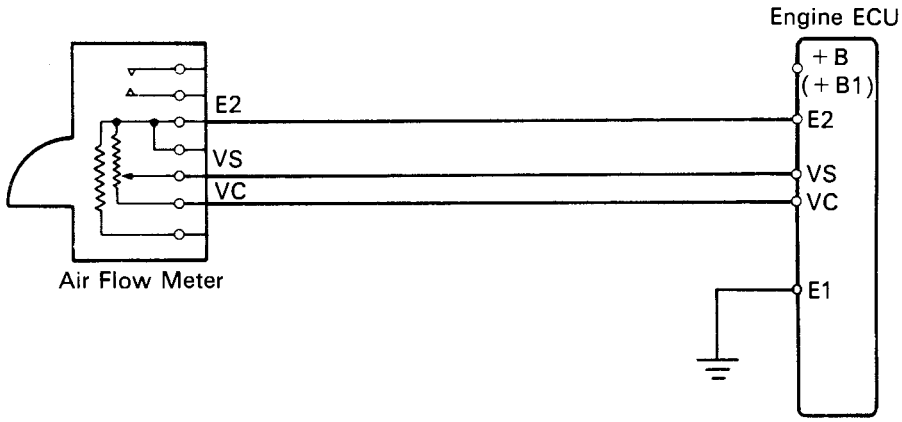

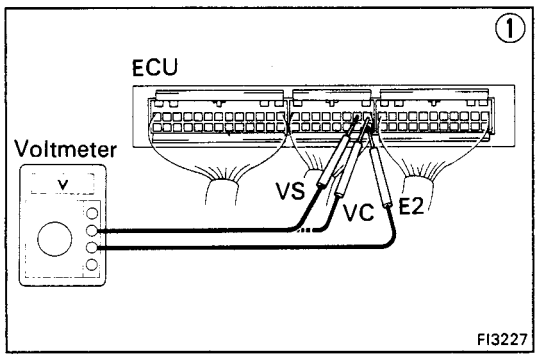

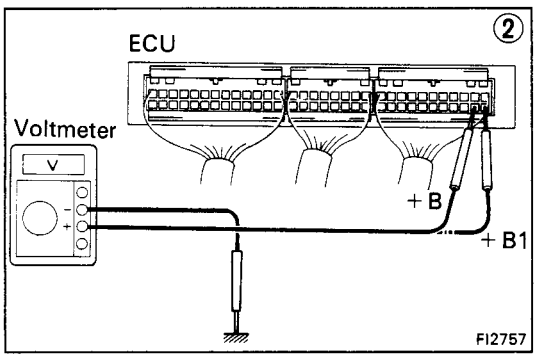

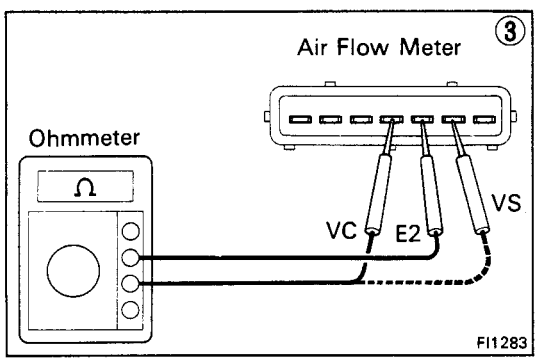

① There is no specified voltage at ECU terminals VC or VS and E2. **(IG SW ON)**

↓

② CHeck that there is voltage between ECU terminal +B (+B1) and body ground. **(IG SW ON)**

- NO → Refer to No.1. (See page FI-36)
- OK ↓

Check wiring between ECU terminal E1 and body ground.

- BAD → Repair or replace.
- OK ↓

③ Check air flow meter. (See page FI-131)

- BAD → Repair or replace air flow meter.
- OK ↓

Check wiring between ECU and air flow meter.

- BAD → Repair or replace.
- OK → Try another ECU.

No.	Terminals	Trouble	Condition	STD voltage
5	No. 1 No. 2 – E01 No. 3 – E02 No. 4	No voltage	IG SW ON	10 – 14 V

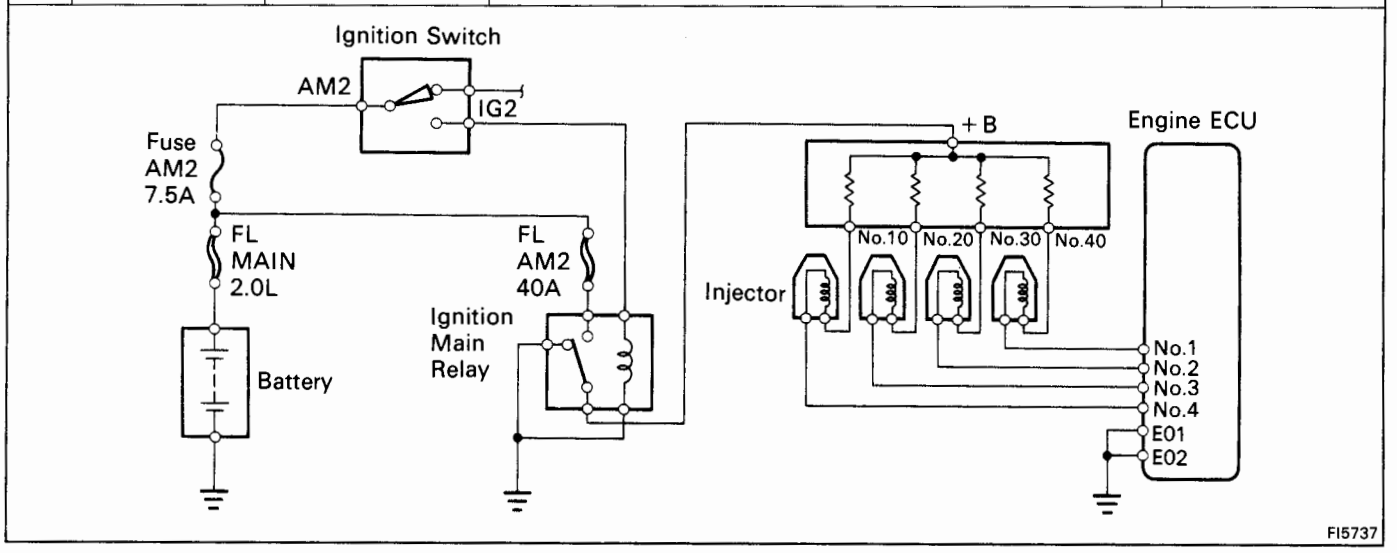

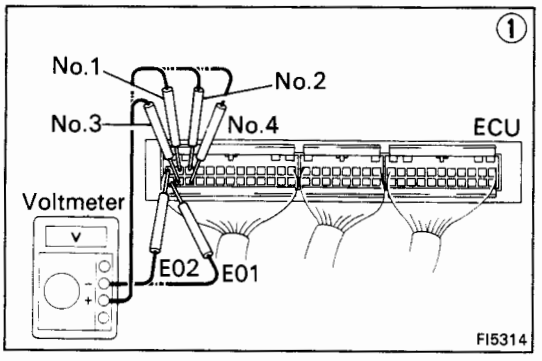

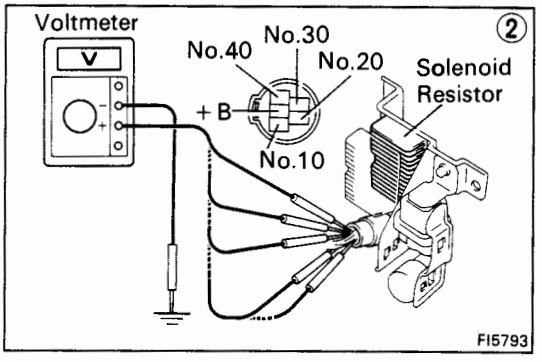

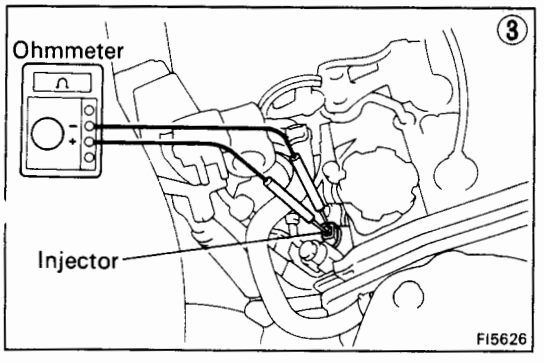

① There is no voltage between ECU terminals No.1, No.2, No.3 and/or No.4 and E01 and/or E02. **(IG SW ON)**

↓

② Check that there is specified voltage between solenoid resistor terminal +B and ground. **STD voltage: 10 – 14 V**

OK → ↓ NO → Check fuses, fusible links, wiring, ignition switch and ignition main relay. → BAD → Repair or replace.

↓

② Check that there is specified voltage between resistor terminals (No.10, No.20, No.30 or No.40) and body ground. **STD voltage: 10 – 14 V**

OK → ↓ NO → Replace resistor.

③ Check resistance of each injector. **STD resistance: 2 – 4 Ω**

OK → ↓ BAD → Replace injector.

↓

Check wiring between ECU and resistor. → BAD → Repair or replace wiring

↓ OK

Try another ECU.

No.	Terminals	Trouble	Condition		STD voltage
6	THA1 – E2	No voltage	IG SW ON	Intake air temperature 20°C (68°F)	1 – 3 V

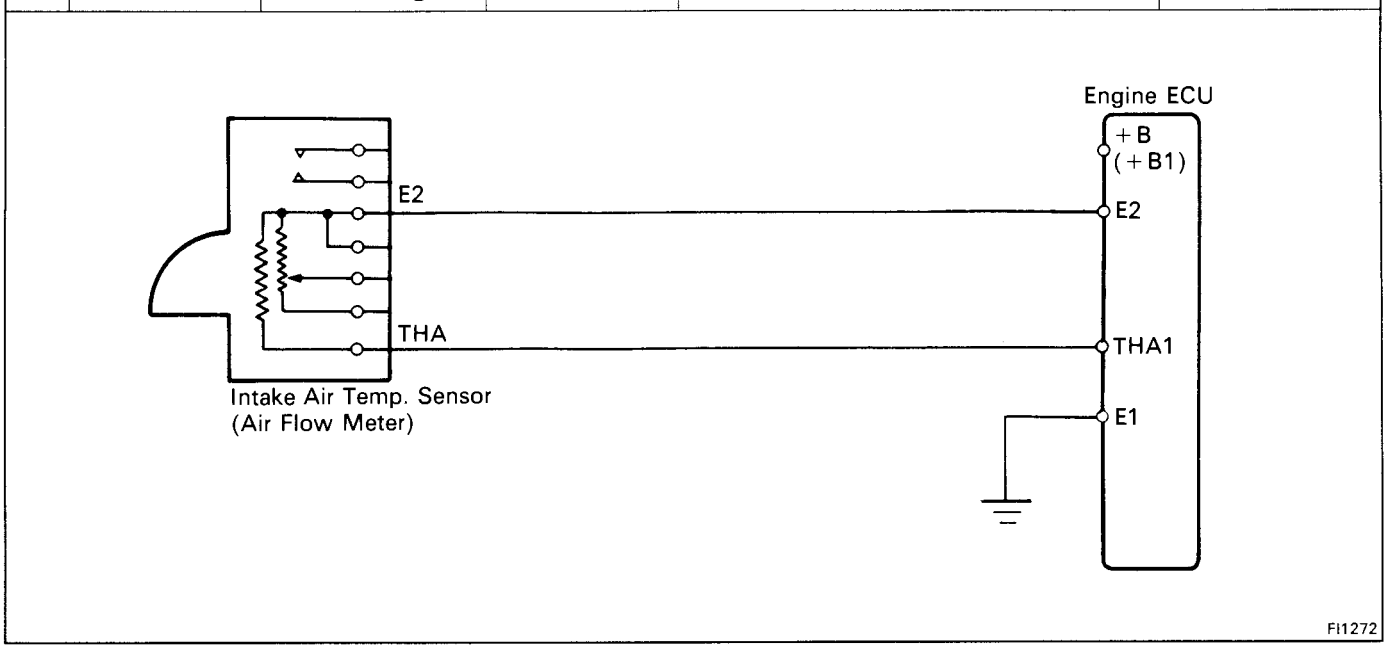

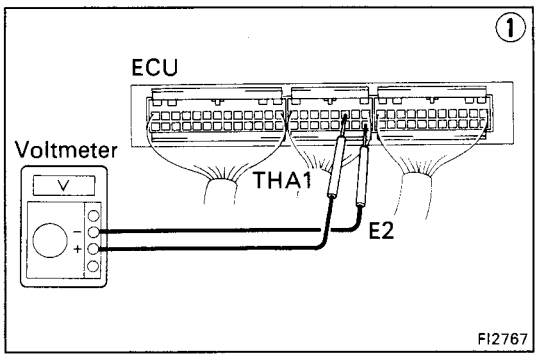

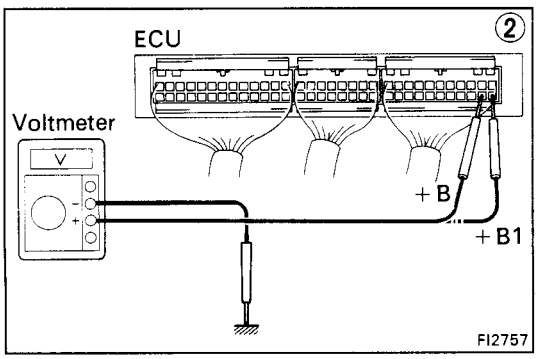

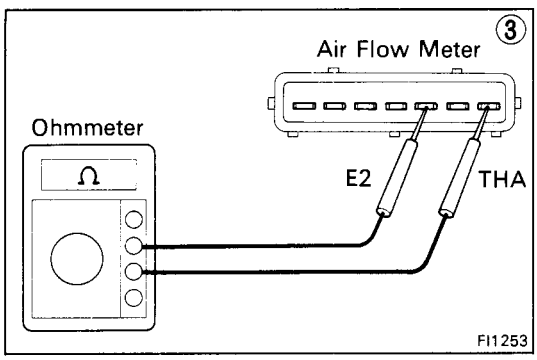

① There is no voltage between ECU terminal THA1 and E2. **(IG SW ON)**

② Check that there is voltage between ECU terminal +B (+B1) and Body ground. **(IG SW ON)**

- NO → Refer No.1. (See page FI-36)
- OK ↓

Check wiring between ECU terminal E1 and body ground.

- BAD → Repair or replace.
- OK ↓

③ Check intake air temp. sensor. (See page FI-131)

- BAD → Replace air flow meter.
- OK ↓

Check wiring between ECU and air temp. sensor.

- BAD → Repair or replace.
- OK → Try another ECU.

No.	Terminals	Trouble	Condition		STD voltage
7	THW – E2	No voltage	IG SW ON	Coolant temperature 80°C (176°C)	0.1 – 1.1 V

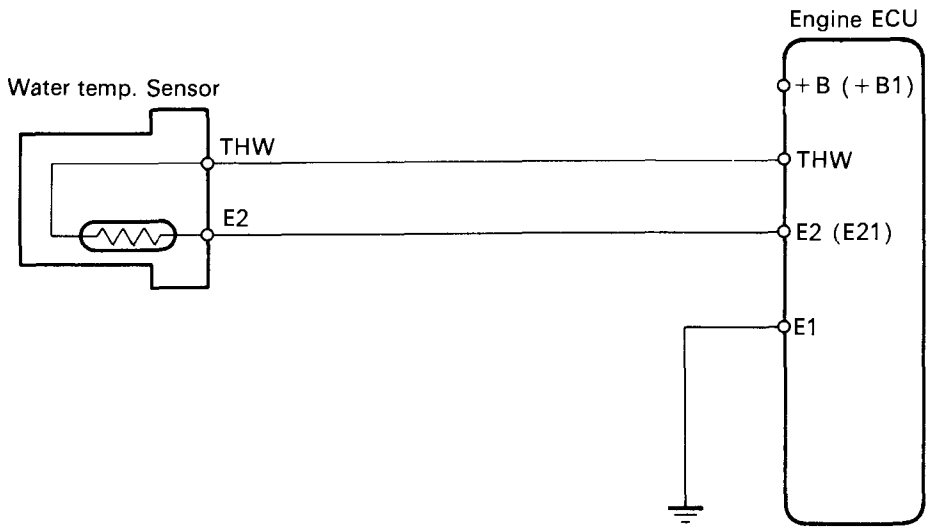

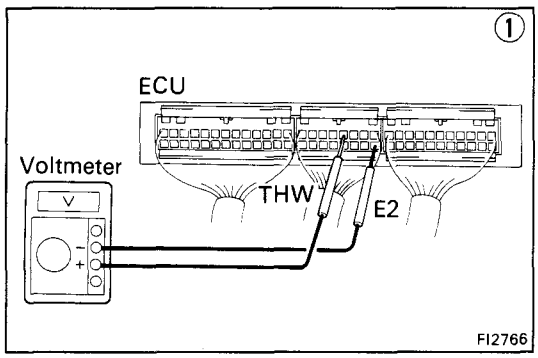

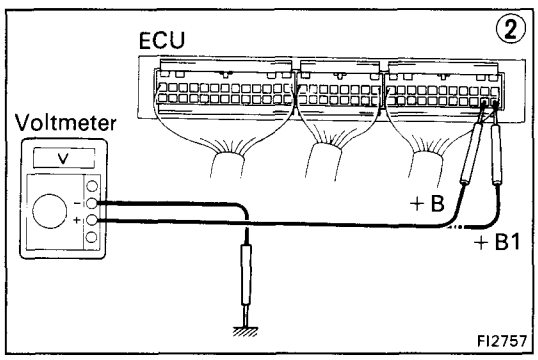

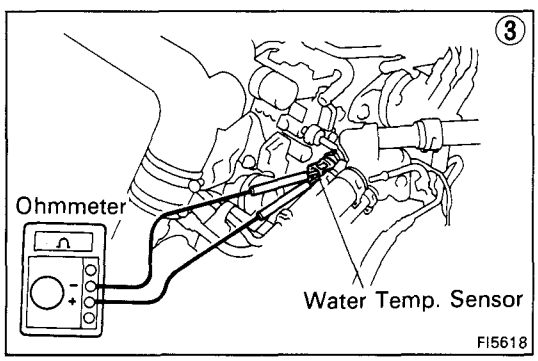

① There is no voltage between ECU terminal THW and E2. **(IG SW ON)**

↓

② Check that there is voltage between ECU terminal +B (+B1) and Body ground. **(IG SW ON)**

- NO → Refer No.1. (See page FI-36)
- OK ↓

Check wiring between ECU terminal E1 and body ground.

- BAD → Repair or replace.
- OK ↓

③ Check water temp. sensor. (See page FI-168)

- BAD → Replace water temp. sensor.
- OK ↓

Check wiring between ECU and water temp. sensor.

- BAD → Repair or replace.
- OK → Try another ECU.

No.	Terminals	Trouble	Condition	STD voltage
8	STA – E1	No voltage	Cranking	6 – 14 V

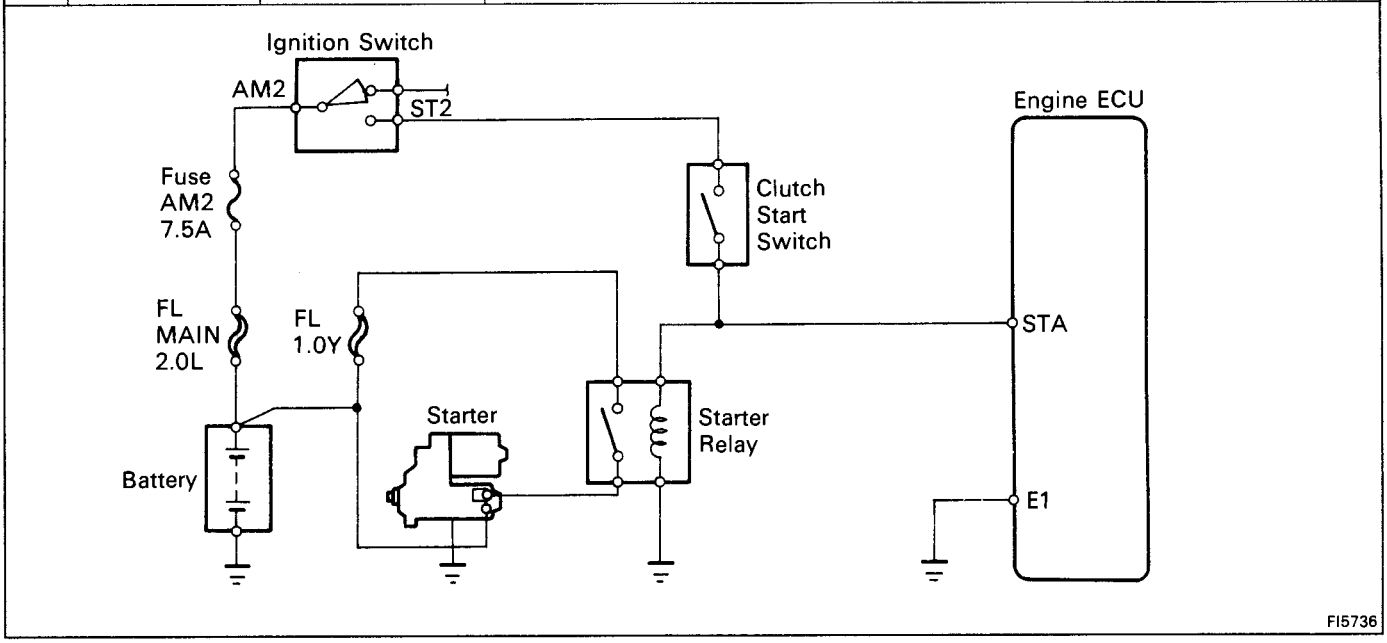

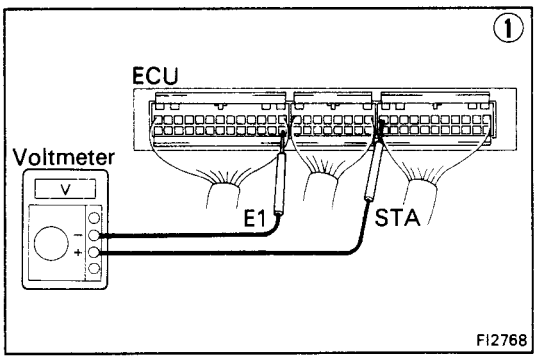

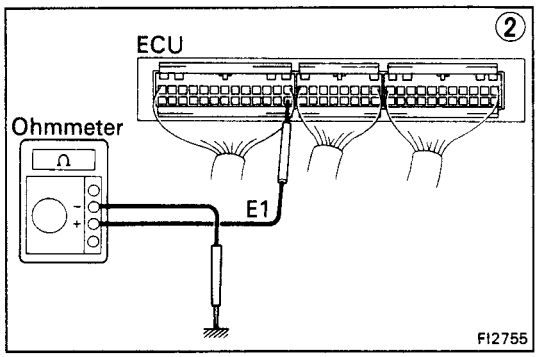

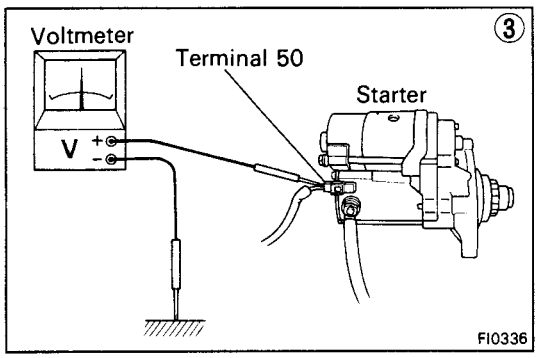

① There is no voltage between ECU terminals STA and E1. **(IG SW ON)**

Check starter operation.
- OK → Check wiring between ECU terminals STA and ignition switch terminal ST2.
  - OK → ② Check wiring between ECU terminal E1 and body ground.
    - OK → Try another ECU.
    - BAD → Repair or replace.
  - BAD → Repair or replace.
- BAD → Check fuse, fusible links, battery, wiring, ignition switch, clutch start switch and starter relay.
  - BAD → Repair or replace.
  - OK → ③ Check that there is voltage at terminal 50 of starter. **(IG SW START) STD voltage: 6 – 14 V**
    - OK → Check starter.
    - NO → Check wiring between ignition switch terminal ST2 and starter terminal 50.

No.	Terminals	Trouble	Condition	STD voltage
9	IGT – E1	No voltage	Idling	0.8 – 1.2 V

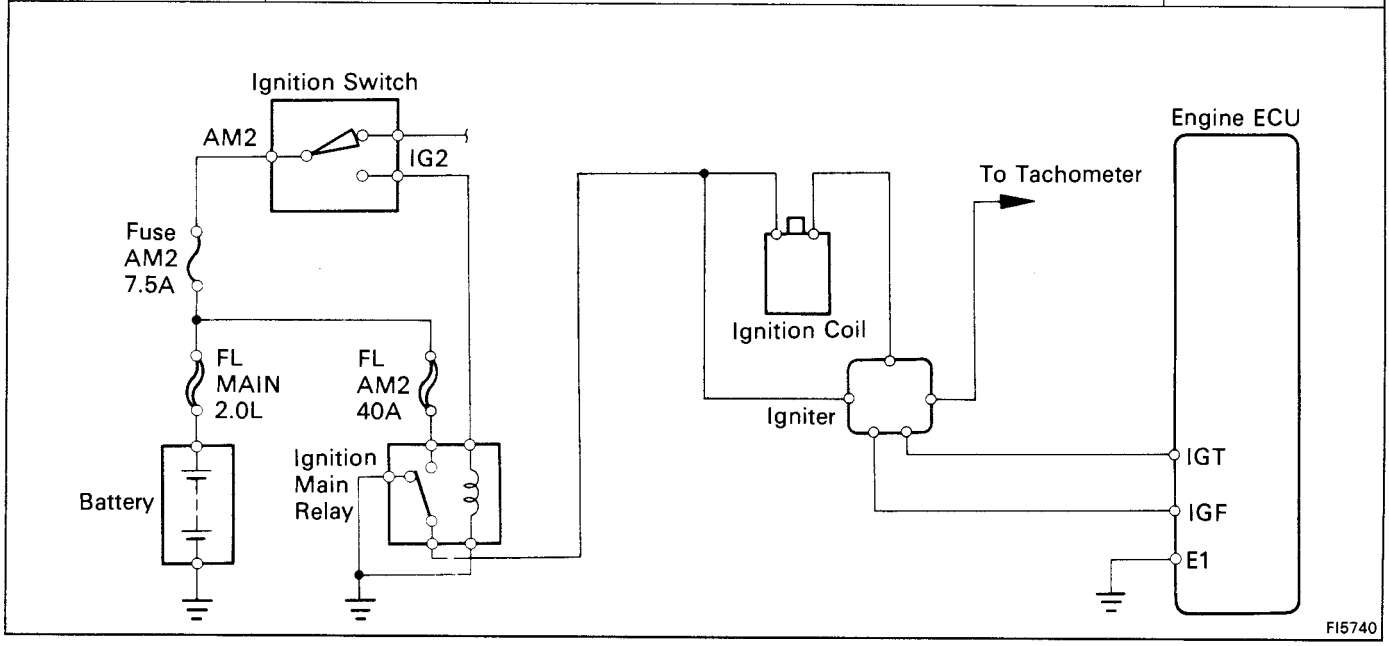

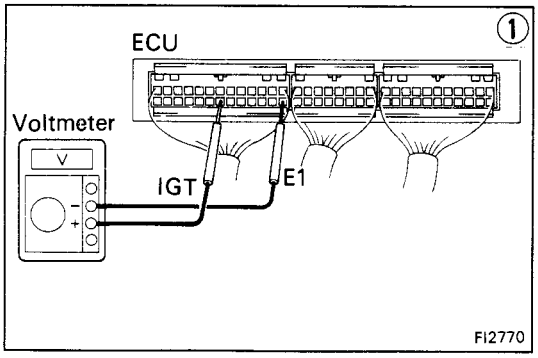

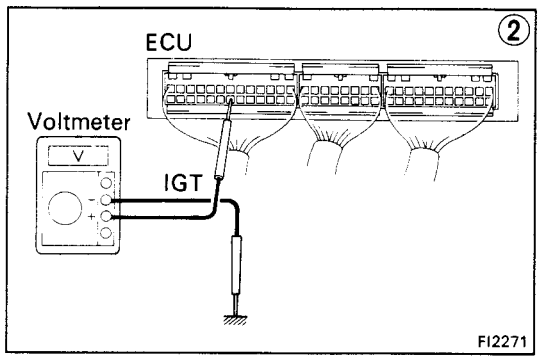

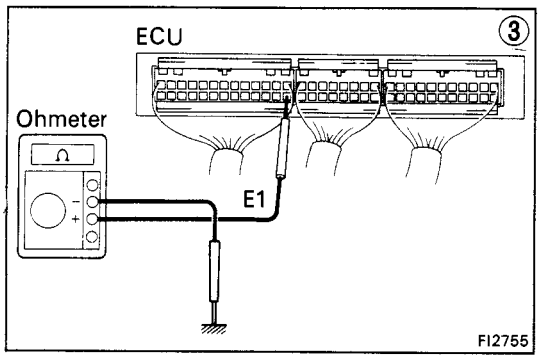

① There is no voltage between ECU terminals IGT and E1. **(Idling)**

② Check that there is voltage between ECU terminal IGT and body ground. **(Idling)**

NO → Check fuse, fusible links, ignition switch and ignition main relay.

OK → ③ Check wiring between ECU terminal E1 and body ground.

③ BAD → Repair or Replace.

③ OK → Try another ECU.

Check fuse, fusible links, ignition switch and ignition main relay. BAD → Repair or replace.

OK → Check distributor. (See page IG-9) BAD → Repair or replace.

OK → Check wiring between ECU and battery. BAD → Repair or replace.

OK → Check igniter. (See page IG-9) BAD → Repair or replace.

No.	Terminals	Trouble	Condition	STD voltage
10	RSC RSO – E1	No voltage	IG SW ON	8 – 14 V

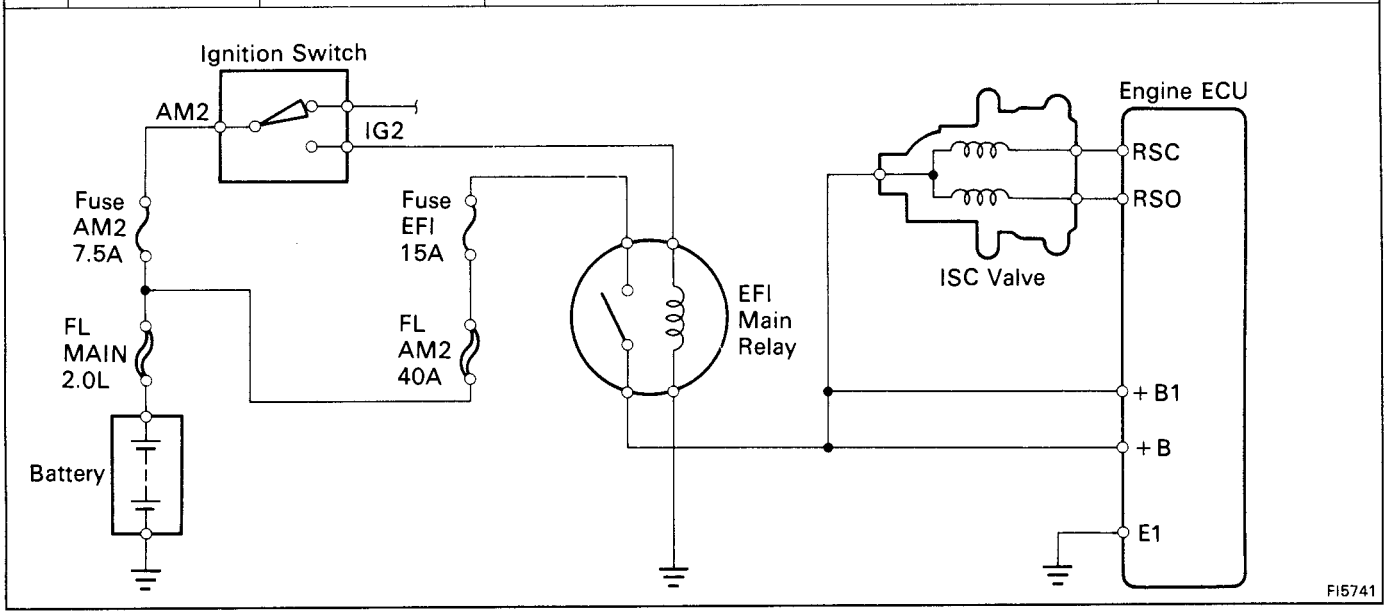

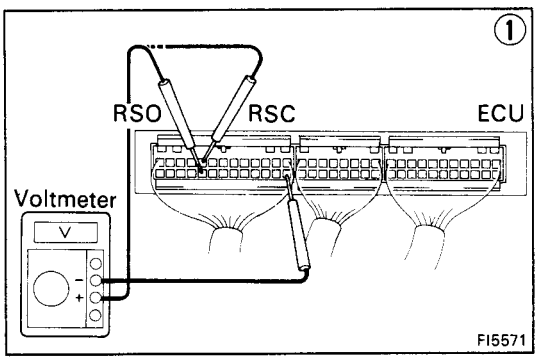

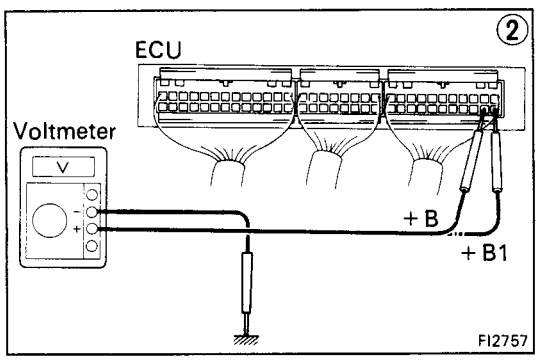

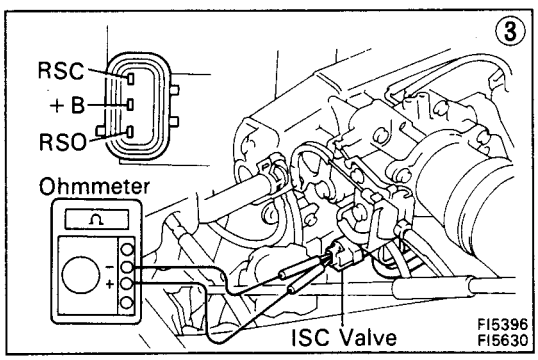

① There is no voltage between ECU terminals RSC or RSO and E1. **(IG SW ON)**

↓

② Check that there is voltage between ECU terminal +B (+B1) and body ground. **(IG SW ON)**

- NO → Refer to No.1. (See page FI-36)
- ON ↓

③ Check resistance between ISC valve terminals +B and RSC or RSO. **STD resistance: 17.7 – 23.9 Ω**

- BAD → Replace ISC valve.
- OK ↓

Check wiring between ECU and ISC valve.

- BAD → Repair or replace wiring.
- OK ↓

Try another ECU.

No.	Terminals	Trouble	Condition	STD voltage
11	W – E1	No voltage	No trouble ("CHECK" engine warning light off) and engine running.	10 – 14 V

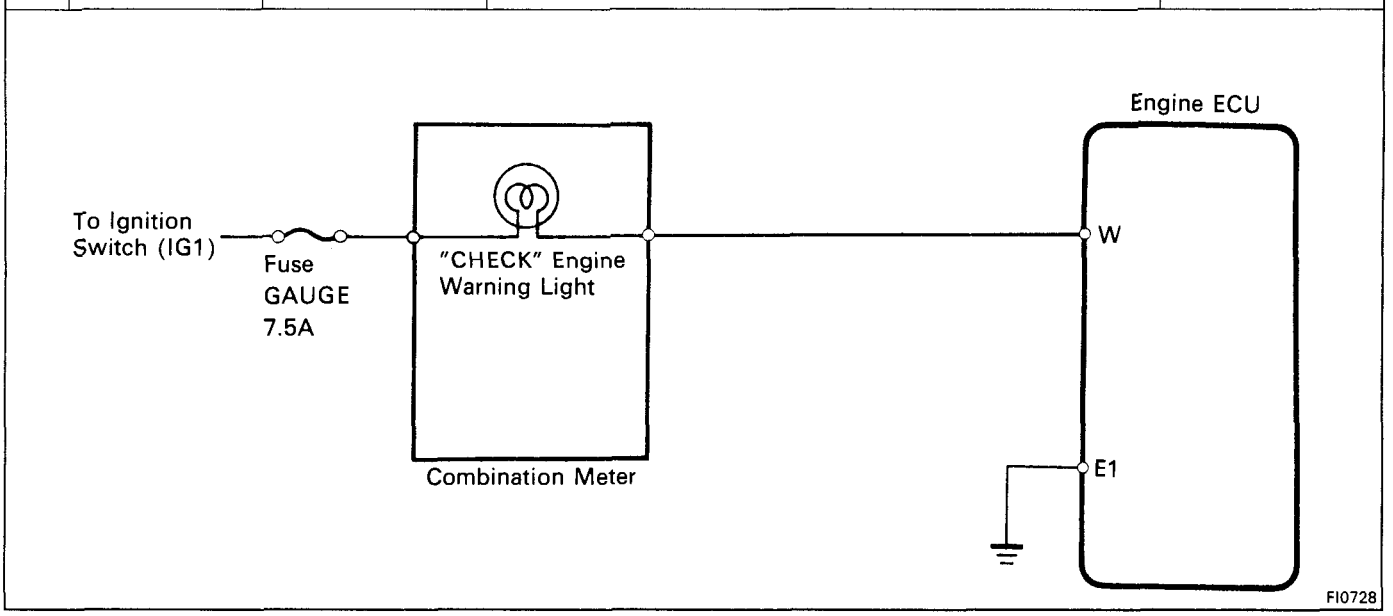

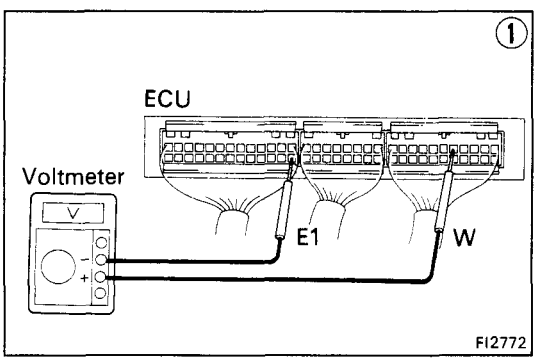

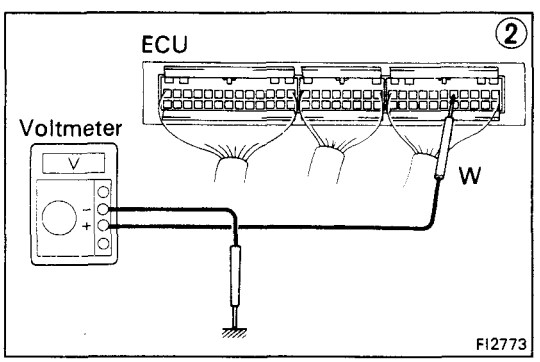

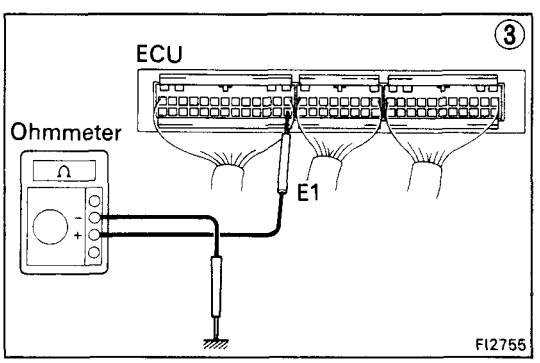

① There is no voltage between ECU terminals W and E1. **(Idling)**

↓

② Check that there is voltage between ECU terminal W and body ground.

- NO → Check fuse GAUGE (7.5A) and check engine warning light.
- OK → ③ Check wiring between ECU terminal E1 and body ground.
  - OK → Try another ECU.
  - BAD → Repair or replace.

Check fuse GAUGE (7.5A) and check engine warning light.

- OK → Check wiring between ECU terminal W and fuse.
- BAD → Repair or replace.
  - Fuse blows again → Check wiring between ECU terminal W and fuse.

Check wiring between ECU terminal W and fuse.

- BAD → Repair or replace.

No.	Terminals	Trouble	Condition	STD voltage
12	PIM – E2	No voltage	IG SW ON	2.5 – 4.5 V
	VC – E2			4 – 6 V

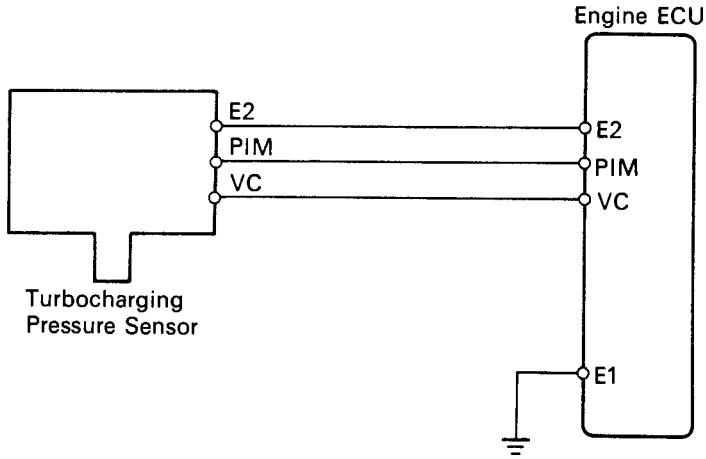

FI1226

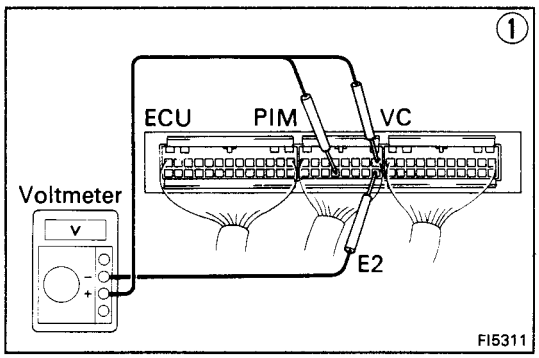

FI5311

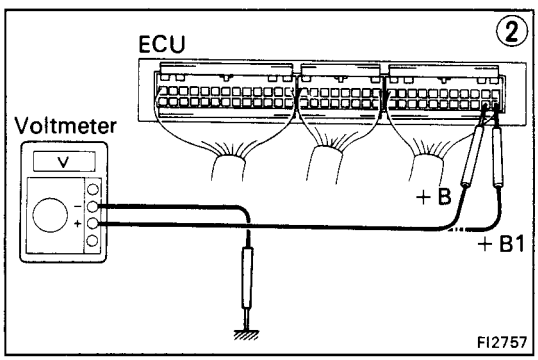

FI2757

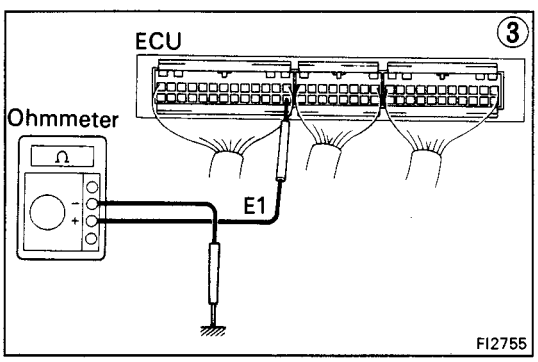

FI2755

• PIM – E2, VC – E2

① There is no voltage between ECU terminals PIM or VC and E2. **(IG SW ON)**

↓

② Check that there is voltage between ECU terminal +B or +B1 and body ground. **(IG SW ON)**

- NO → Refer to No.1. (See page FI-36)
- OK ↓

③ Check wiring between ECU terminal E1 and body ground.

- BAD → Repair or replace.
- OK ↓

Check turbocharging pressure sensor. (See page FI-171)

- BAD → Replace turbocharging pressure sensor.
- OK ↓

Check wiring between ECU and turbocharging pressure sensor.

- BAD → Repair or replace.
- OK ↓

Try another ECU.

No.	Terminal	Trouble	Condition	STD voltage
13	AC1 – E1	No voltage	Air conditioning ON	8 – 14 V

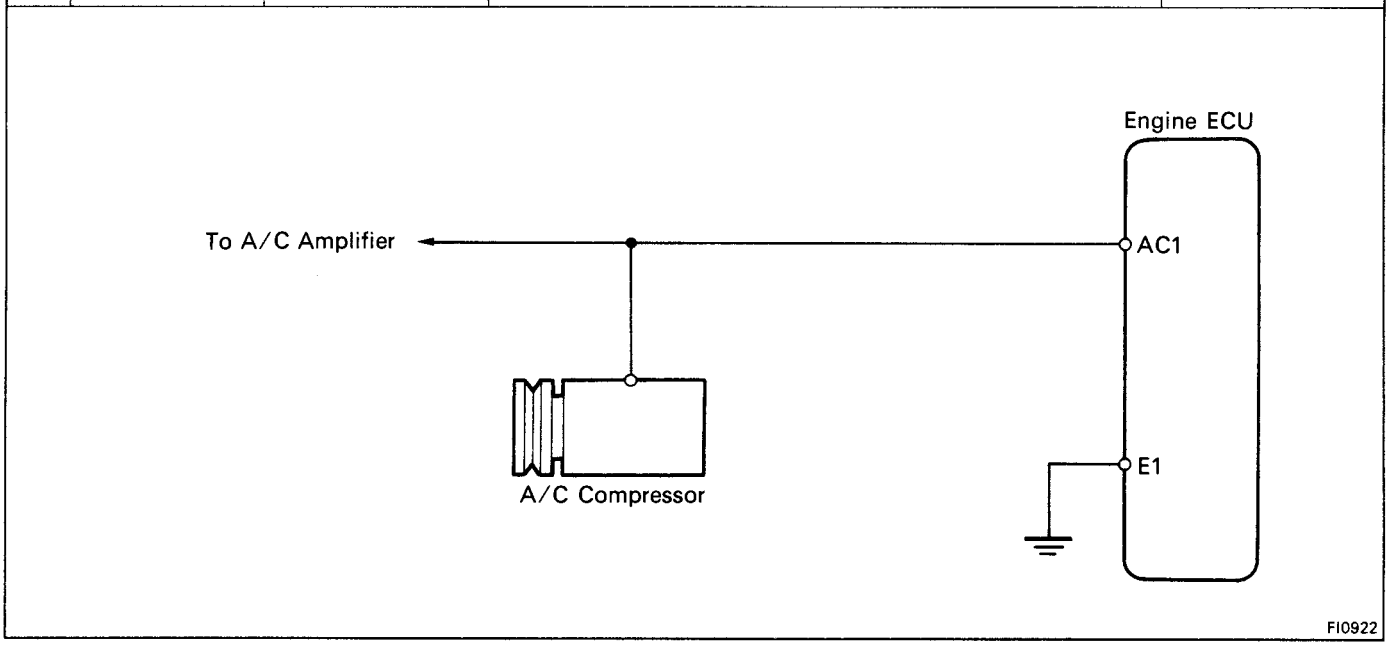

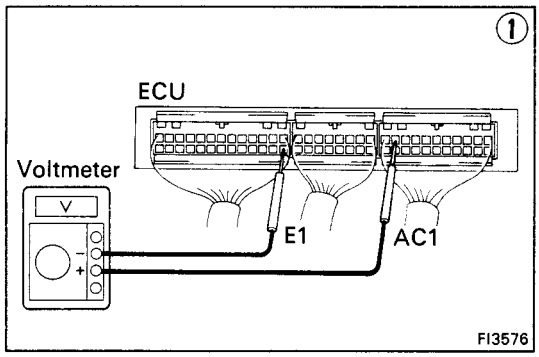

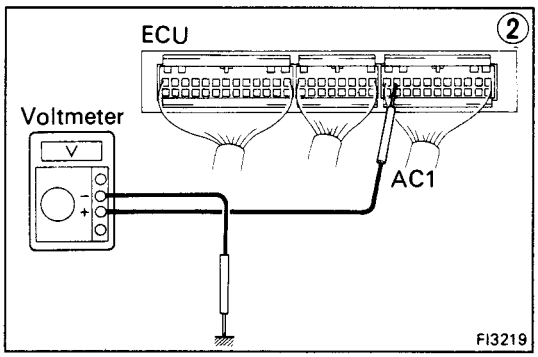

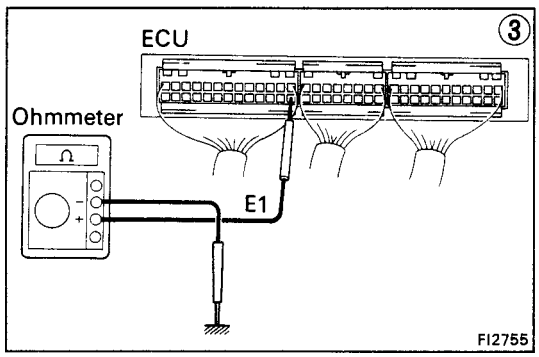

① There is no voltage between ECU terminals AC1 and E1. **(Air conditioning ON)**

② Check that there is voltage between ECU terminal AC1 and body ground.

- NO → Check compressor running.
- OK → ③ Check wiring between ECU terminal E1 and body ground.
  - OK → Try another ECU.
  - BAD → Repair or replace.

Check compressor running.

- OK → Check wiring between ECU terminal AC1 and amplifier.
  - BAD → Repair or replace.
- BAD → Check that there is voltage between amplifier terminal and body ground.
  - BAD → Repair or replace.
  - OK → Check wiring between amplifier and ECU or compressor.
    - BAD → Repair or replace.

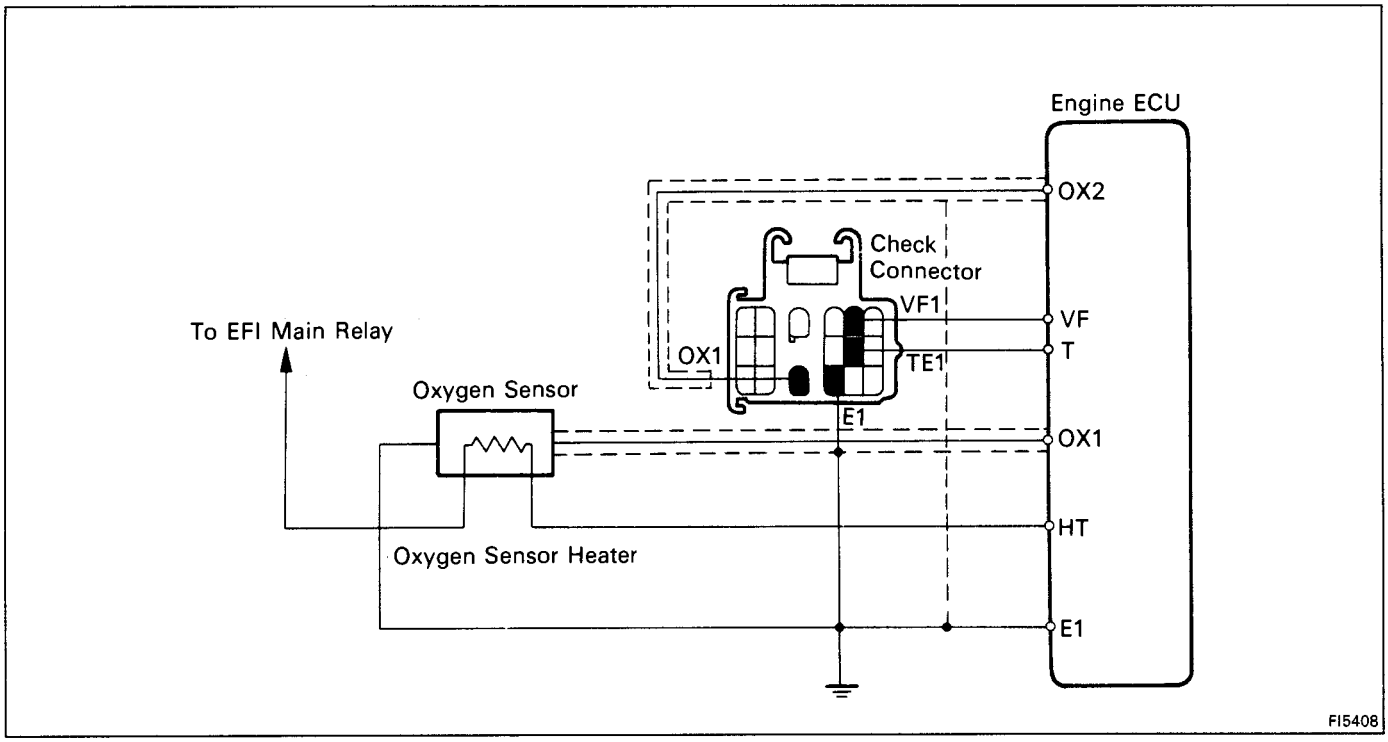

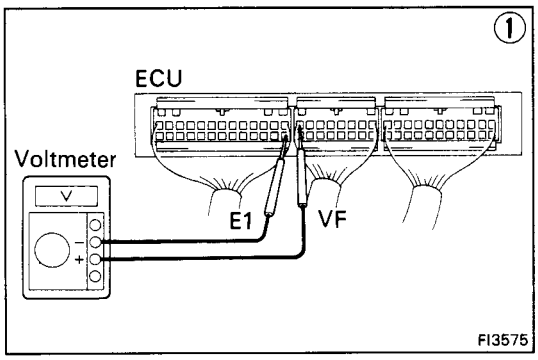

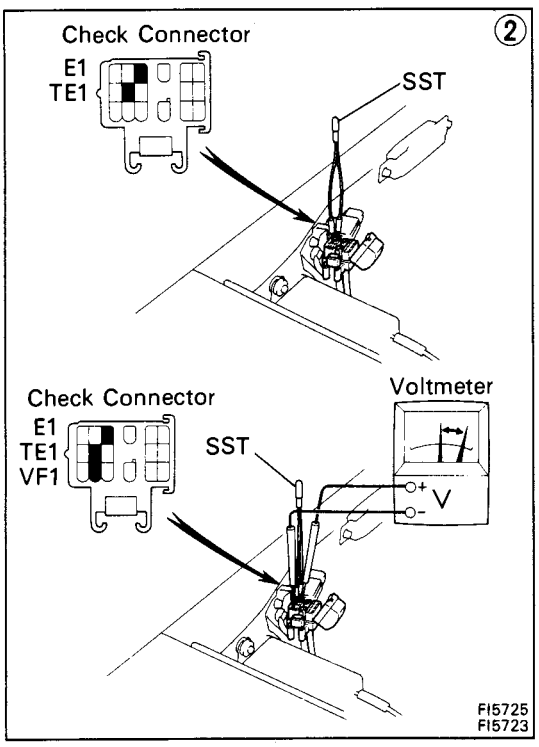

① There is no voltage between ECU terminals VF and E1.

↓

Check that there is voltage between ECU terminal VF and body ground.

NO → OK

Check wiring between ECU terminal E1 and body ground.

OK → Try another ECU. → Repair or replace.

BAD → Repair or replace.

↓

Is air leaking into air induction system? — BAD → Repair air leak.

↓ OK

Check spark plugs. (See page IG-6) — BAD → Repair or replace.

↓ OK

Check distributor and ignition system. (See page IG-4) — BAD → Repair or replace.

↓ OK

Check fuel pressure. (See page FI-87) — BAD → Repair or replace.

↓ OK

Check injectors. (See page FI-110) — BAD → Repair or replace.

↓ OK

* Check cold start injector. (See page FI-99) — BAD → Repair or replace.

↓ OK

Check air flow meter. (See page FI-131) — BAD → Repair or replace.

↓ OK

② Check operating of oxygen sensor. (See page FI-173) — BAD → System normal

↓ BAD

Check wiring between oxygen sensor and ECU. — BAD → Repair wiring.

↓ OK

Replace oxygen sensor.

* Rich malfunction only

CALIF. only

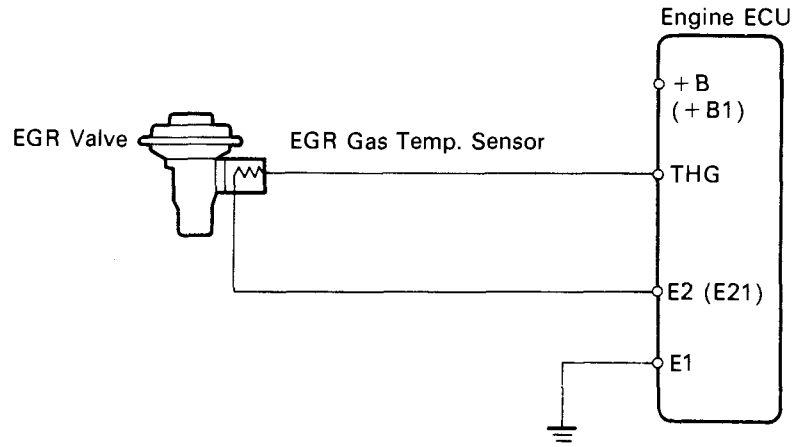

FI2680

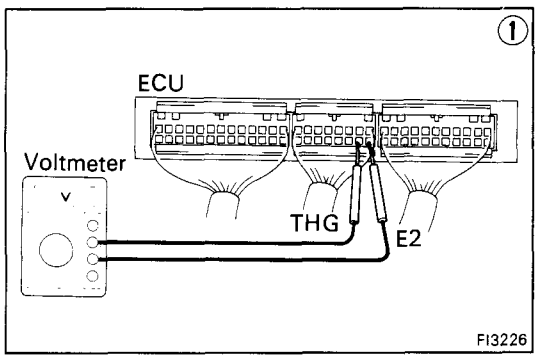

FI3226

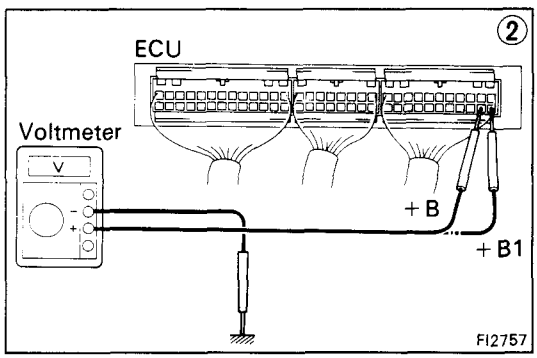

FI2757

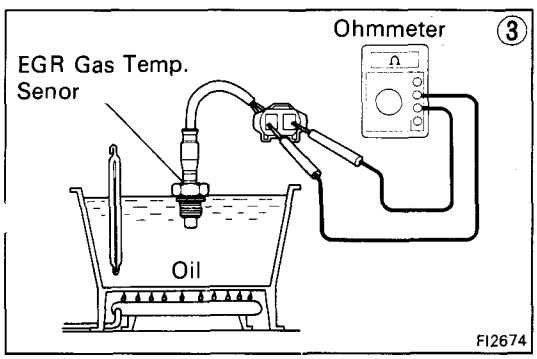

FI2674

① There is no voltage between ECU terminals THG and E2. **(IG SW ON)**

② Check that there is voltage between ECU terminal +B (+B1) and body ground. **(IG SW ON)**

- OK → Check wiring between ECU terminal E1 and body ground.
- NO → Refer to No.1. (See page FI-36)

Check wiring between ECU terminal E1 and body ground.

- OK → Check EGR system. (See page EC-8)
- BAD → Repair or replace.

Check EGR system. (See page EC-8)

- BAD → Repair or replace.
- OK → ③ Check EGR gas temp. sensor. (See page FI-172)

③ Check EGR gas temp. sensor. (See page FI-172)

- BAD → Replace EGR gas temp. sensor.
- OK → Check wiring between ECU and EGR gas temp. sensor.

Check wiring between ECU and EGR gas temp. sensor.

- OK → Try another ECU.
- BAD → Repair or replace

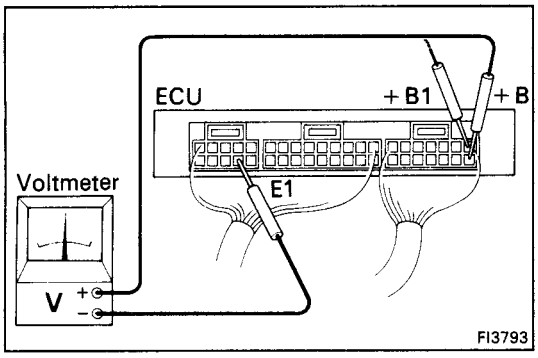

EFI SYSTEM CHECK PROCEDURE (5S-FE M/T)

HINT:

- Perform all voltage measurements with the connectors disconnected.
- Verify that the battery voltage is 11 V or more when the ignition switch is in "ON" position.

Using a voltmeter with high impedance (10 kΩ/V minimum), measure the voltage at each terminal of the wiring connectors.

Terminals of ECU

Symbol	Terminal	Symbol	Terminal	Symbol	Terminal
E01	POWER GROUND	G⊖	DISTRIBUTOR	PSCT	POWER STEERING ECU
E02	POWER GROUND	E21	SENSOR GROUND	PS	POWER STEERING ECU
No.10	INJECTOR	C1	DISTRIBUTOR	B/K	STOP LIGHT SWITCH
No.20	INJECTOR	NE	DISTRIBUTOR		–
STA	STARTER SWITCH	IGF	IGNITER	ELS	HEADLIGHT AND DEFOGGER
IGT	IGNITER	* THG	EGR GAS TEMP. SENSOR	SPD	SPEED SENSOR
STJ	COLD START INJECTOR	T	CHECK CONNECTOR	FC	CIRCUIT OPENING RELAY
E1	ENGINE GROUND	IDL	THROTTLE POSITION SENSOR	A/C	A/C COMPRESSOR
FPU	FUEL PRESSURE VSV	THA	INTAKE AIR TEMP. SENOR	VF	CHECK CONNECTOR
EGR	EGR VSV	VC	VACUUM SENSOR		–
ISCC	ISC VALVE	PIM	VACUUM SENSOR	BATT	BATTERY
ISCO	ISC VALVE	PSW	THROTTLE POSITION SENSOR	W	WARNING LIGHT
OX1	OXYGEN SENSOR (MAIN)	THW	WATER TEMP. SENSOR	+B1	EFI MAIN RELAY
* OX2	SUB-OXYGEN SENSOR	E2	SENSOR GROUND	+B	EFI MAIN RELAY

Engine ECU Terminals

* CALIF. only

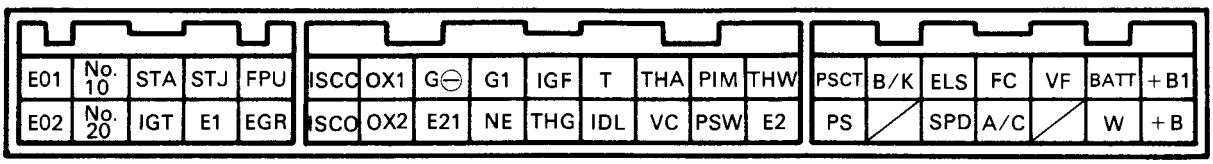

FI4065

Voltage at ECU Wiring Connectors

No.	Terminals	Condition		STD voltage (V)	See page
1	+B, +B1 – E1	IG SW ON		10 – 14	FI-54
2	BATT – E1	–		10 – 14	FI-55
3	IDL – E1	IG SW ON	Throttle valve open	8 – 14	FI-56
	PSW – E1		Throttle valve fully closed (Throttle opener must be cancelled first)	4.5 – 5.5	
4	PIM – E2	IG SW ON		3.3 – 3.9	FI-57
	VC – E2			4.5 – 5.5	
5	No.10, No.20 – E01, E02			10 – 14	FI-58
6	THA – E2	IG SW ON	Intake air temp. 20°C (68°F)	1.7 – 3.1	FI-59
7	THW – E2		Coolant temp. 80°C (176°F)	0.3 – 0.8	FI-60
8	STA – E1	Cranking		6 – 14	FI-61
9	IGT – E1	Cranking or idling		0.8 – 1.2	FI-62
10	ISCC, ISCO – E1	IG SW ON		8 – 14	FI-63
11	W – E1	No trouble ("CHECK" engine warning light off) and engine running		10 – 14	FI-64
12	A/C– E1	IG SW ON	Air conditioning ON	8 – 14	FI-65

Engine ECU Terminals

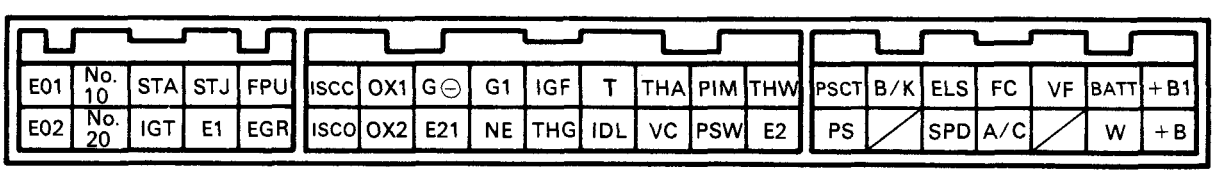

FI4065

No.	Terminals	Trouble	Condition	STD voltage
1	+B +B1 – E1	No voltage	IG SW ON	10 – 14 V

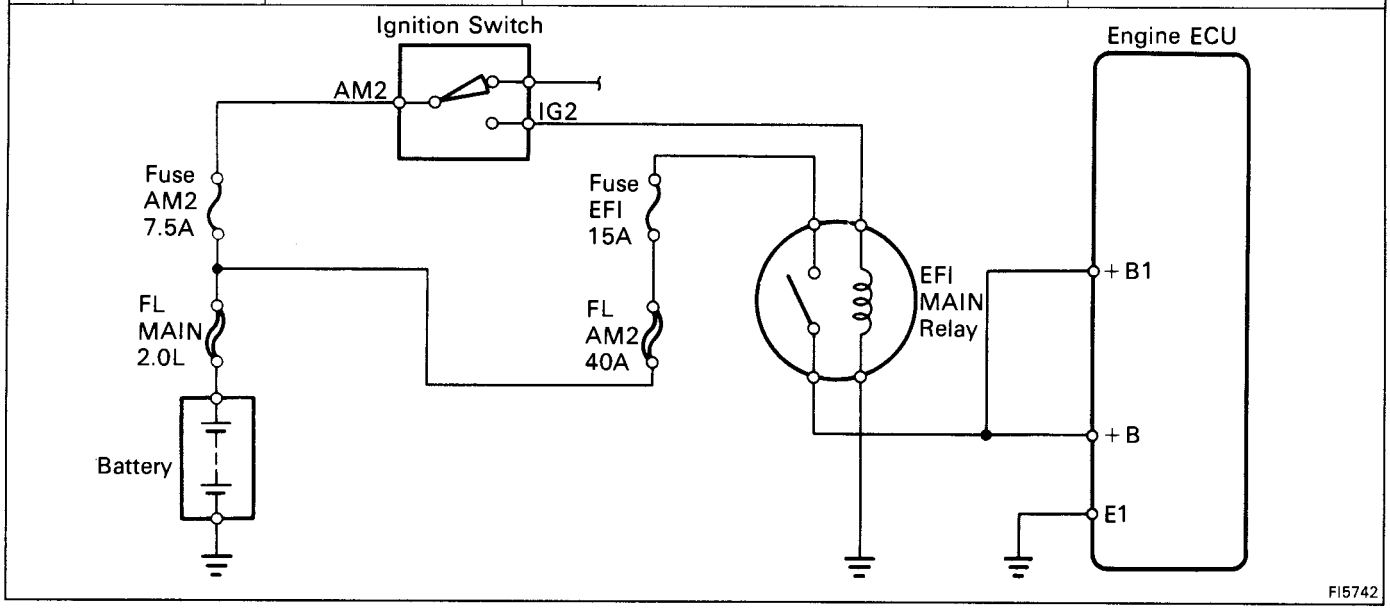

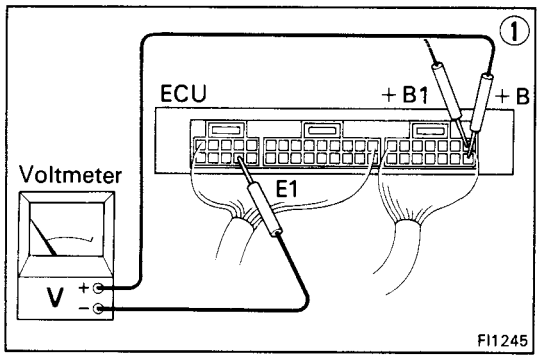

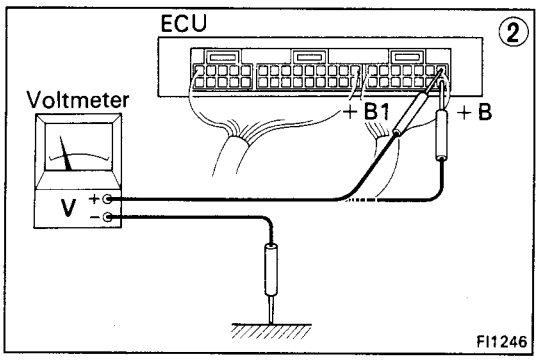

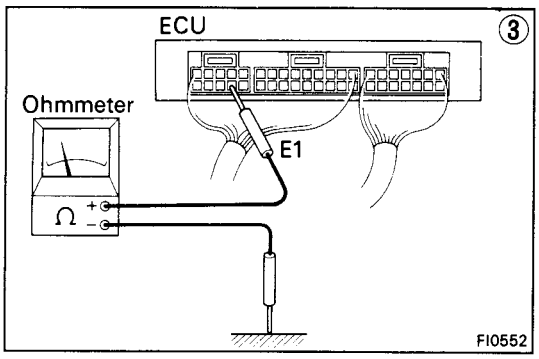

① There is no voltage between ECU terminals +B or +B1 and E1. **(IG SW ON)**

↓

② Check that there is voltage between ECU terminal +B or +B1 and body ground. **(IG SW ON)**

- OK → ③ Check wiring between ECU terminal E1 and body ground.
  - OK → Try another ECU.
  - BAD → Repair or replace.
- NO → Check fuses, fusible links and ignition switch.
  - BAD → Repair or replace.
  - OK ↓

Check EFI main relay. (See page FI-156)
- BAD → Replace.
- OK ↓

Check wiring between EFI main relay and battery.
- BAD → Repair or replace.

No.	Terminals	Trouble	Condition	STD voltage
2	BATT – E1	No voltage	IG SW ON	10 – 14 V

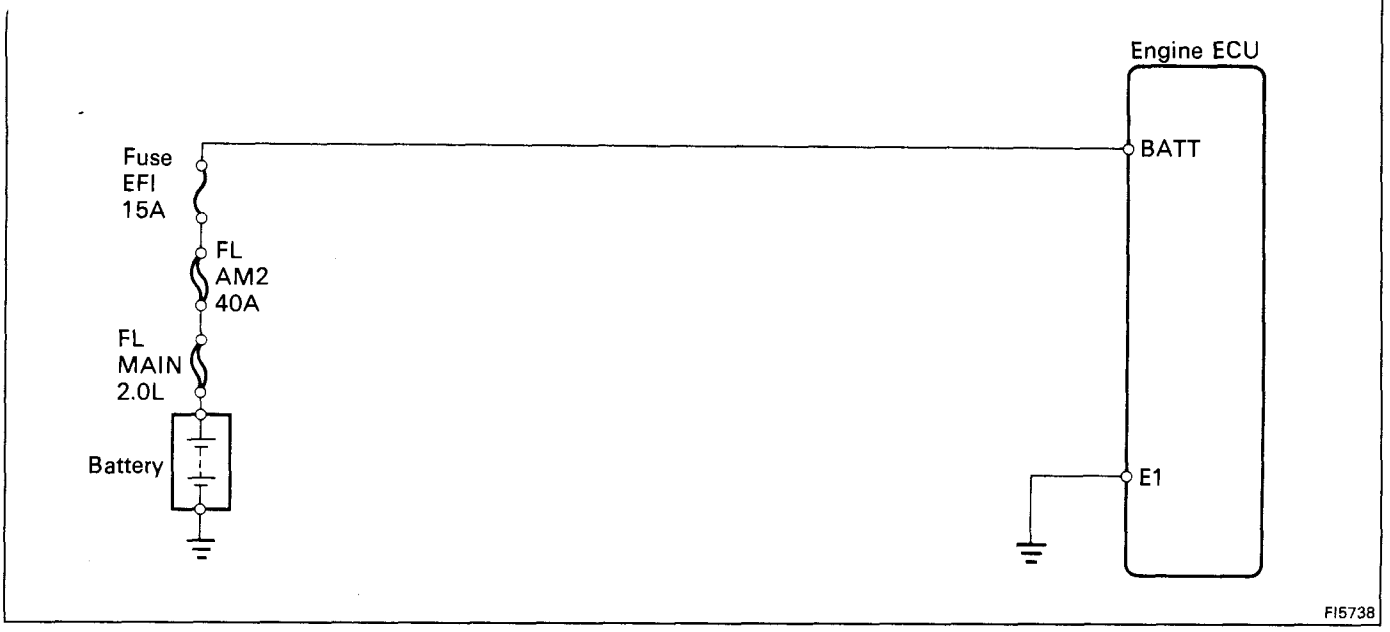

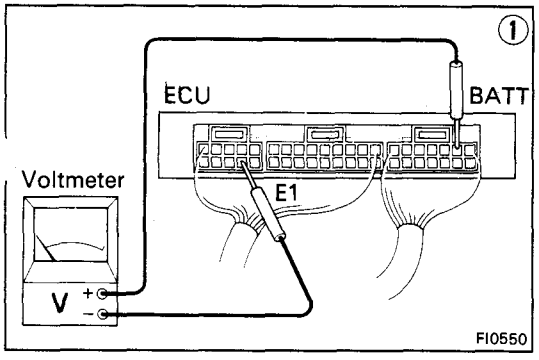

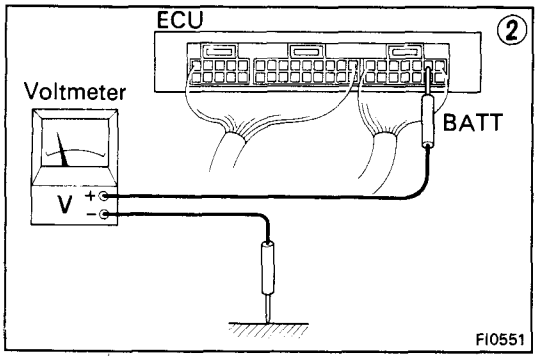

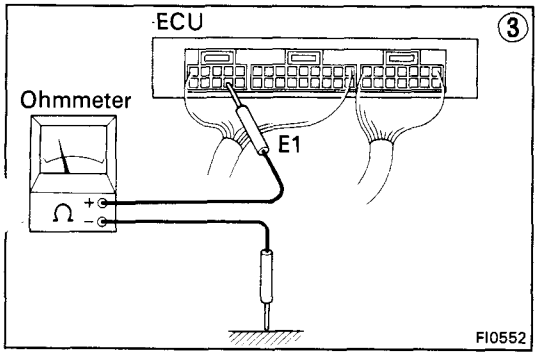

① There is no voltage between ECU terminals BATT and E1.

↓

② Check that there is voltage between ECU terminal BATT and body ground.

NO → Check fuse and fusible links.

OK → ③ Check wiring between ECU terminal E1 and body ground.

- OK → Try another ECU.
- BAD → Repair or replace.

Check fuse and fusible links.
- BAD → Replace.
- OK → Check wiring between ECU terminal and battery.
  - BAD → Repair or replace.

No.	Terminals	Trouble	Condition		STD Voltage
3	IDL – E1	No voltage	IG SW ON	Throttle valve open	8 – 14 V
	PSW – E1			Throttle valve fully closed (Throttle opener must be cancelled first)	4 – 6 V

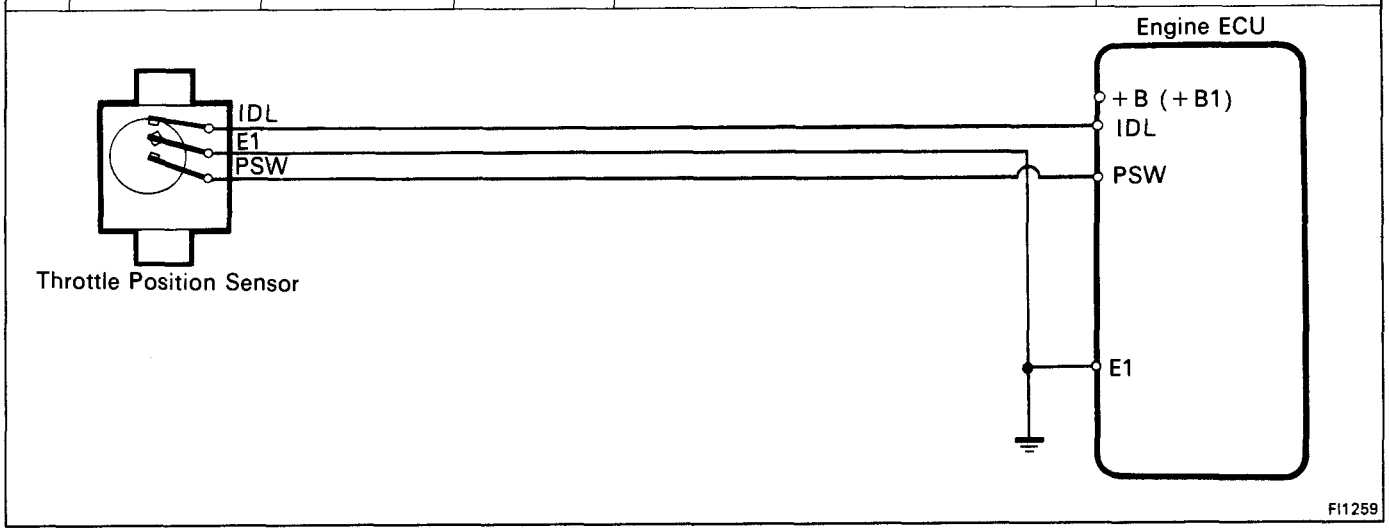

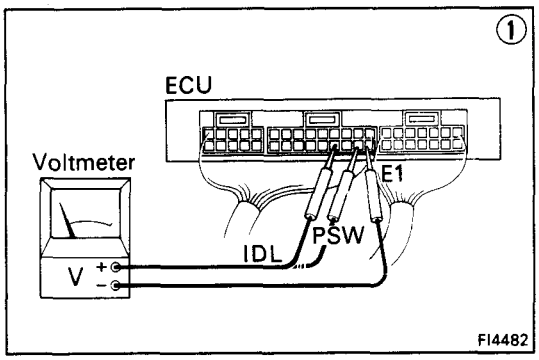

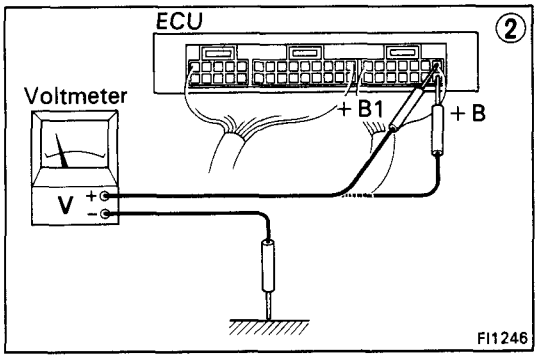

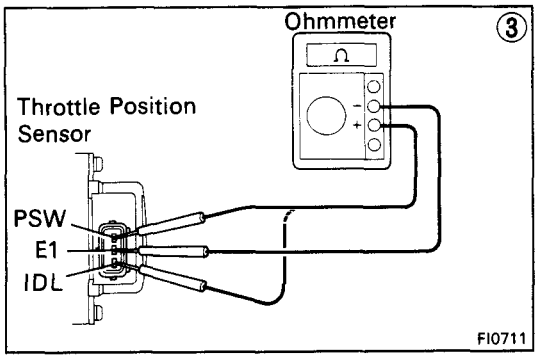

● **IDL – E1, PSW – E1**

① There is no voltage between ECU terminals IDL or PSW and E1. **(IG SW ON)**

② Check that there is voltage between ECU terminal +B or +B1 and body ground. **(IG SW ON)**

NO → Refer to No.1. (See page FI-54)

OK → Check wiring between ECU terminal E1 and body ground.

- OK → Try another ECU.
- BAD → Repair or replace.

Refer to No.1. (See page FI-54)

- BAD → Repair or replace.
- OK → ③ Check throttle position sensor. (See page FI-141)

③ Check throttle position sensor. (See page FI-141)

- BAD → Replace or repair throttle position sensor.
- OK → Check wiring between ECU and throttle position sensor.

Check wiring between ECU and throttle position sensor.

- BAD → Repair or replace.
- OK → Try another ECU.

No.	Terminals	Trouble	Condition	STD Voltage
4	PIM – E2	No voltage	IG SW ON	3.3 – 3.9 V
	VC – E2			4.5 – 5.5 V

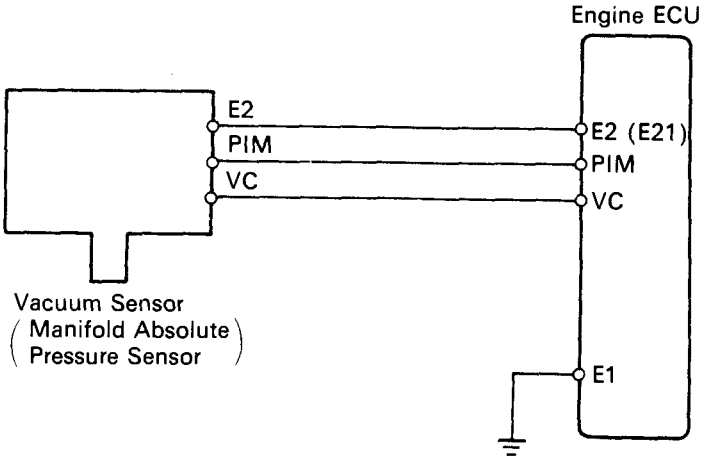

FI1226

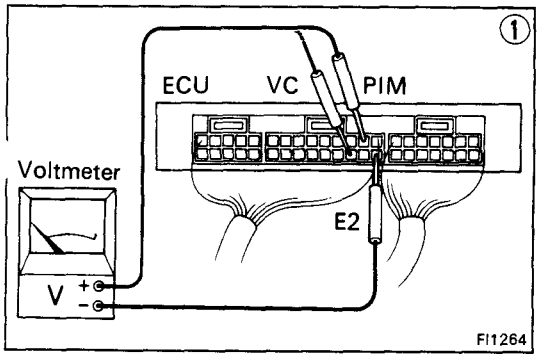

FI1264

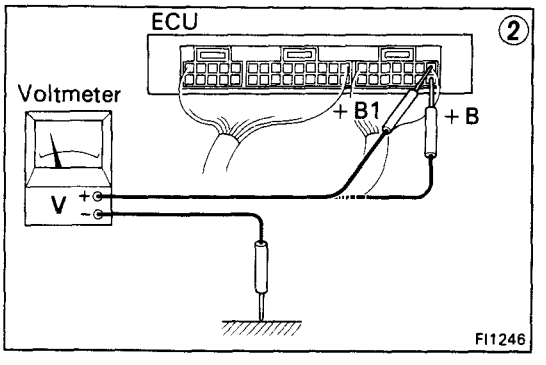

FI1246

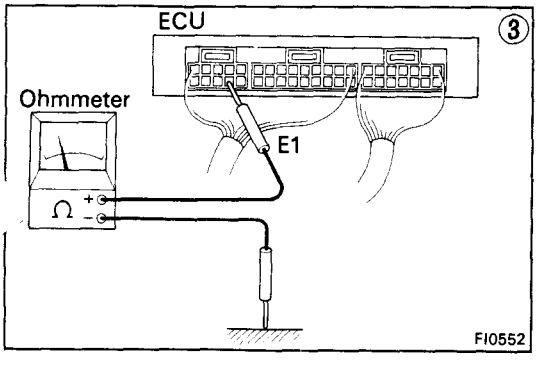

FI0552

● **PIM – E2, VC – E2**

① There is no voltage between ECU terminal PIM or VC and E2. **(IG SW ON)**

↓

② Check that there is voltage between ECU terminal +B (+B1) and body ground. **(IG SW ON)**

- NO → Refer to No.1. (See page FI-54)
- OK ↓

③ Check wiring between ECU terminal E1 and body ground.

- BAD → Repair or replace.
- OK ↓

Check vacuum sensor. (See page FI-136)

- BAD → Replace vacuum sensor.
- OK ↓

Check wiring between ECU and vacuum sensor.

- BAD → Repair or replace.
- OK ↓

Try another ECU.

No.	Terminals	Trouble	Condition	STD voltage
5	No.10 – E01 No.20 – E02	No voltage	IG SW ON	10 – 14 V

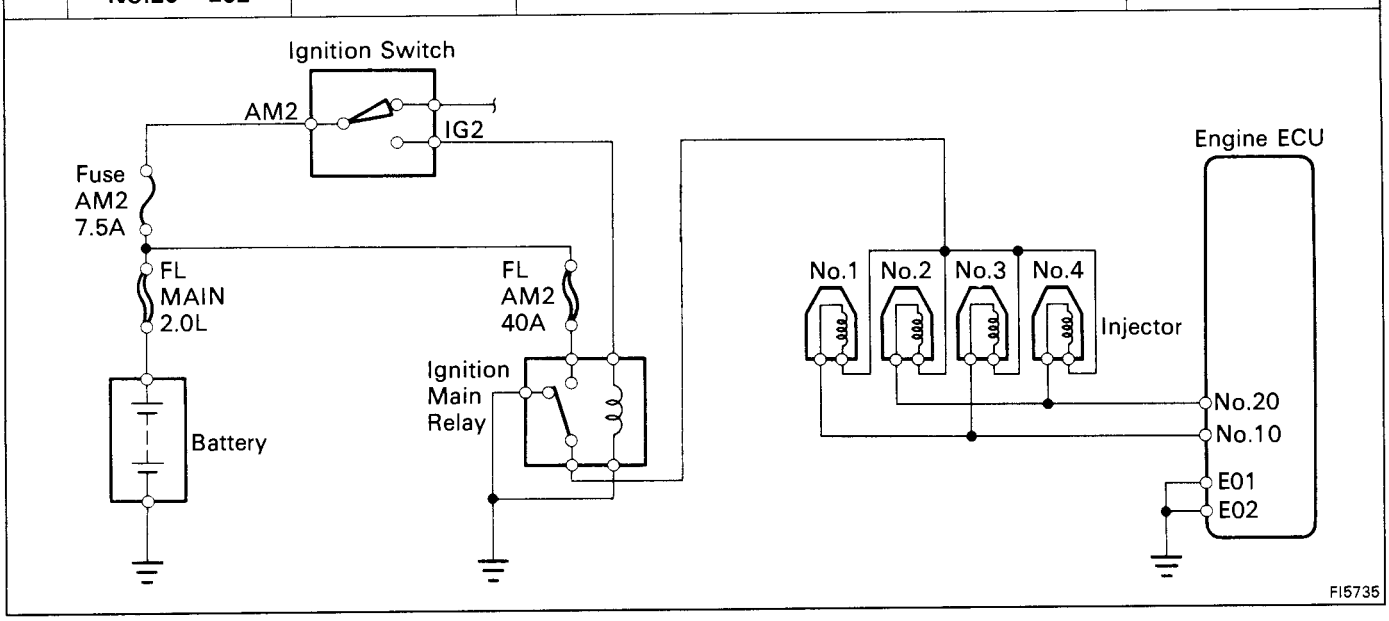

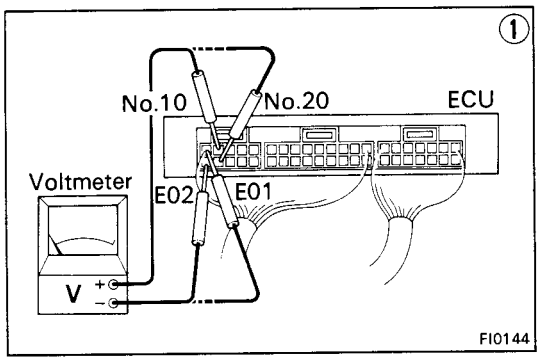

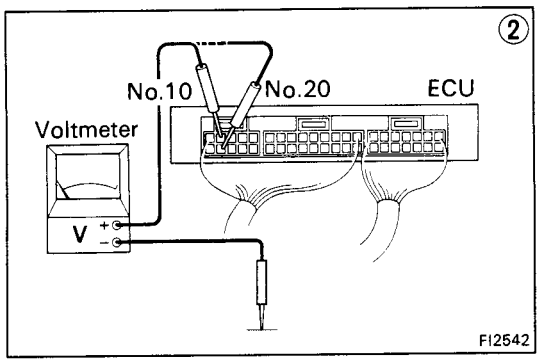

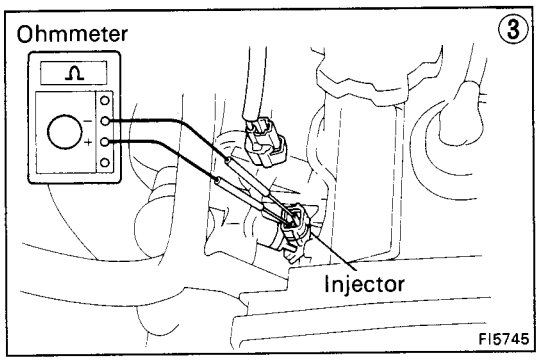

① There is no voltage between ECU terminals No.10 and/or No.20 and E01 and/or E02. **(IG SW ON)**

↓

② Check that there is voltage between ECU terminal No.10 and/or No.20 and body ground.

- NO → Check fuse, fusible links, ignition switch and ignition main relay.
- OK → Check wiring between ECU terminal E01 and/or E02 and body ground.
  - OK → Try another ECU.
  - BAD → Repair or replace.

Check fuse, fusible links, ignition switch and ignition main relay.
- BAD → Repair or Replace.
- OK ↓

③ Check resistance of each injector.
STD resistance: Approx. 13.8 Ω

- OK ↓
- BAD → Replace injector.

Check wiring between ECU terminal No.10 and/or No.20 and battery.
- BAD → Repair or replace.

No.	Terminals	Trouble	Condition		STD voltage
6	THA – E2	No voltage	IG SW ON	Intake air temperature 20°C (68°F)	1.7 – 3.1 V

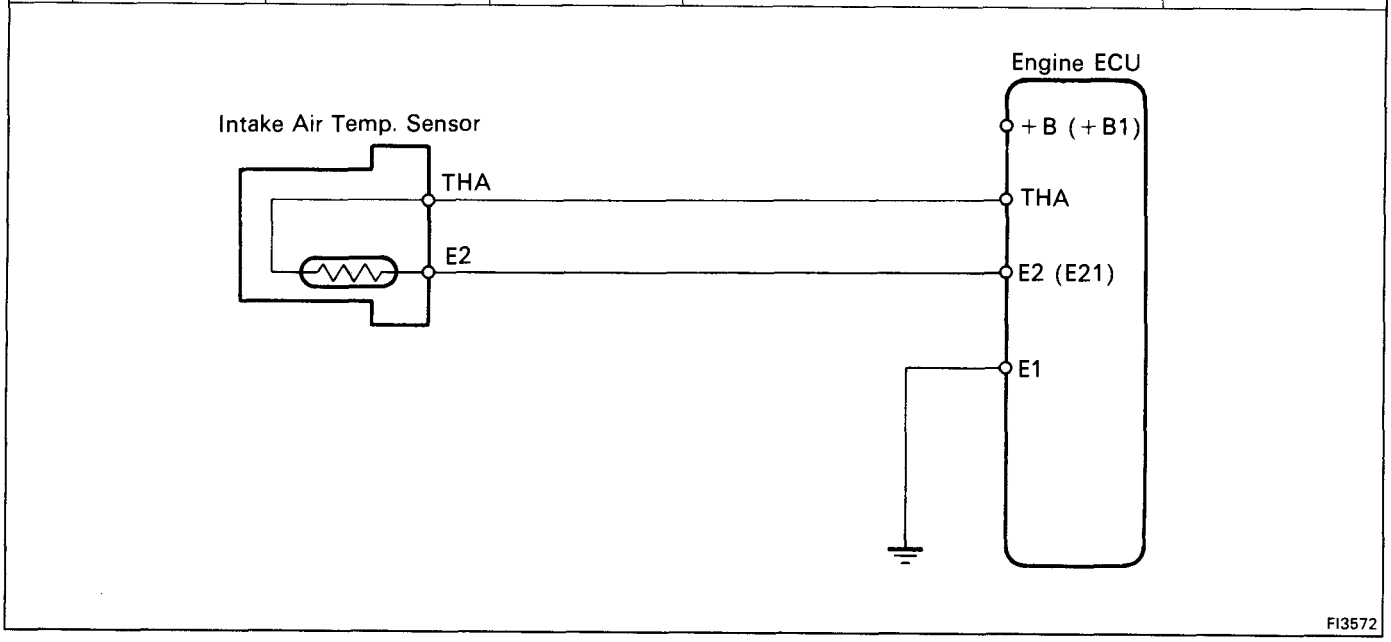

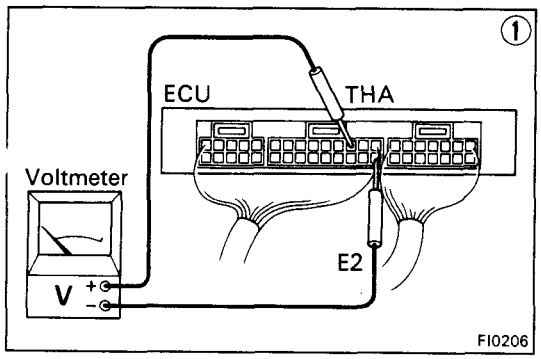

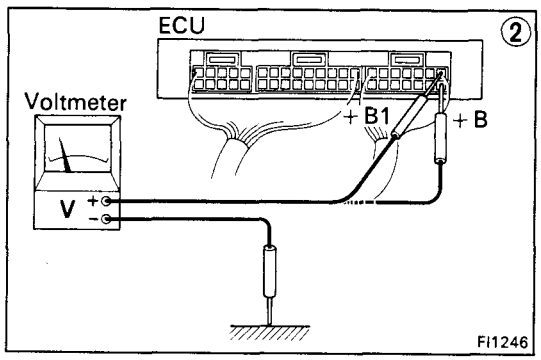

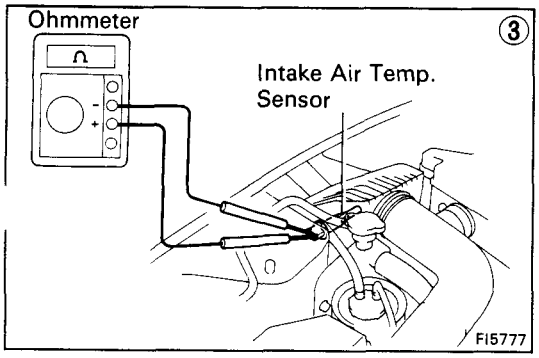

① There is no voltage between ECU terminals THA and E2. **(IG SW ON)**

↓

② Check that there is voltage between ECU terminal +B or +B1 and body ground. **(IG SW ON)**

- NO → Refer to No.1. (See page FI-54)
- OK ↓

Check wiring between ECU terminal E1 and body ground.

- BAD → Repair or replace.
- OK ↓

③ Check intake air temp. sensor. (See page FI-169)

- BAD → Replace intake air temp. sensor.
- OK ↓

Check wiring between ECU and intake air temp. sensor.

- BAD → Repair or replace.
- OK → Try another ECU.

No.	Terminals	Trouble	Condition		STD voltage
7	THW – E2	No voltage	IG SW ON	Coolant temperature 80°C (176°F)	0.3 – 0.8 V

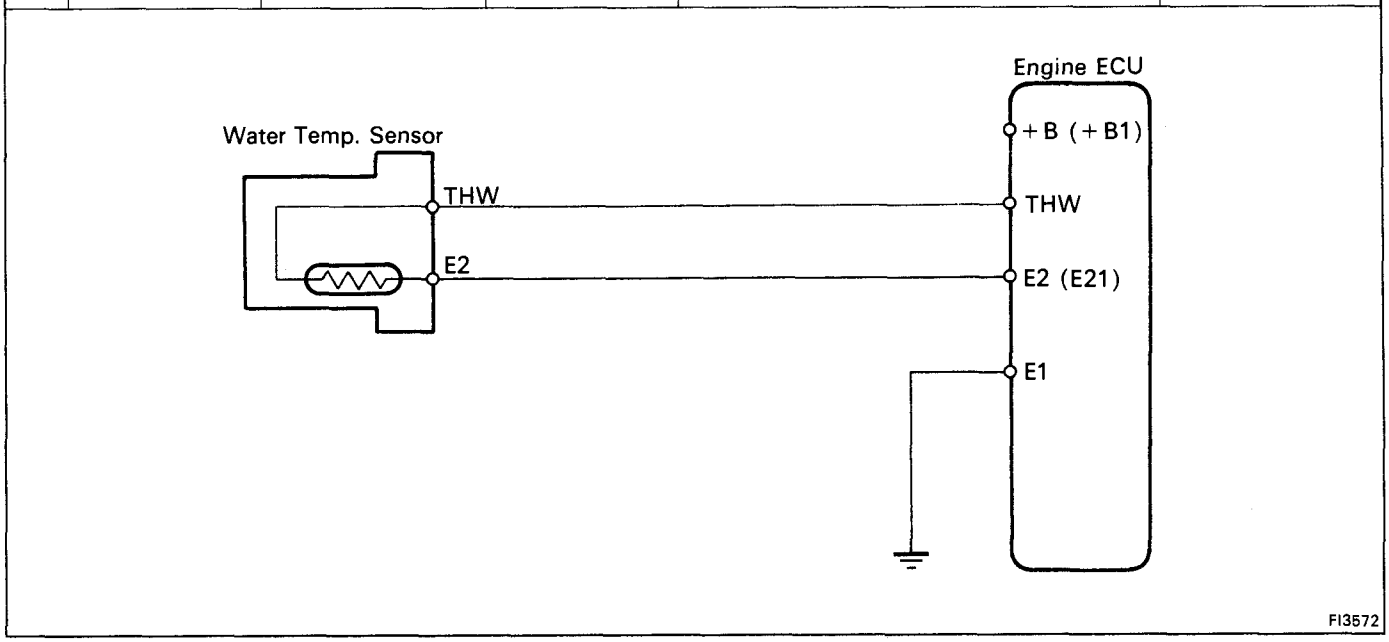

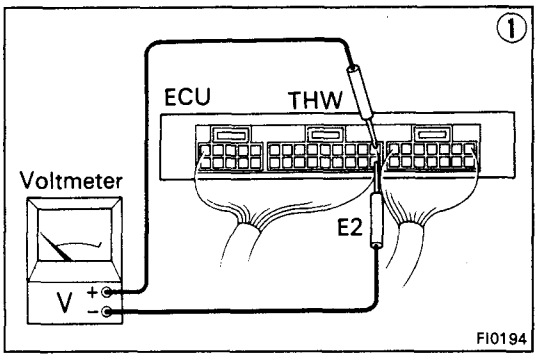

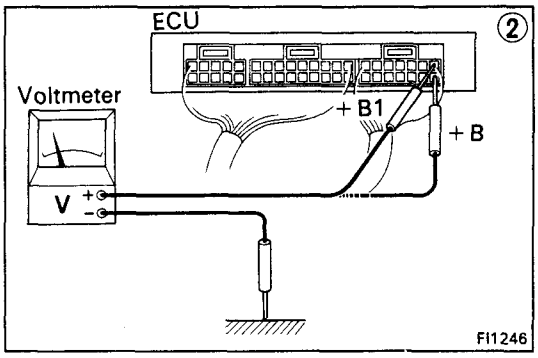

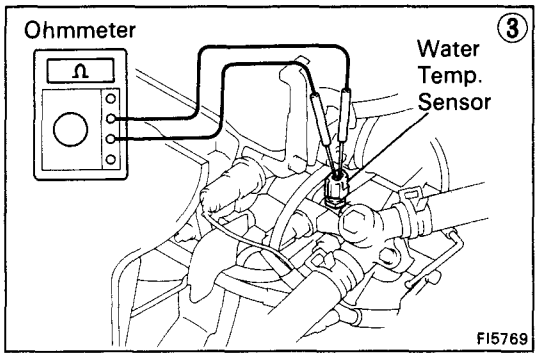

① There is no voltage between ECU terminals THW and E2. **(IG SW ON)**

↓

② Check that there is voltage between ECU terminal +B or +B1 and body ground. **(IG SW ON)**

- NO → Refer to No.1. (See page FI-54)
- OK ↓

Check wiring between ECU terminal E1 and body ground.

- BAD → Repair or replace.
- OK ↓

③ Check water temp. sensor. (See page FI-168)

- BAD → Replace water temp. sensor.
- OK ↓

Check wiring between ECU and water temp. sensor.

- BAD → Repair or replace.
- OK → Try another ECU.

No.	Terminals	Trouble	Condition	STD voltage
8	STA – E1	No voltage	Cranking	6 – 14 V

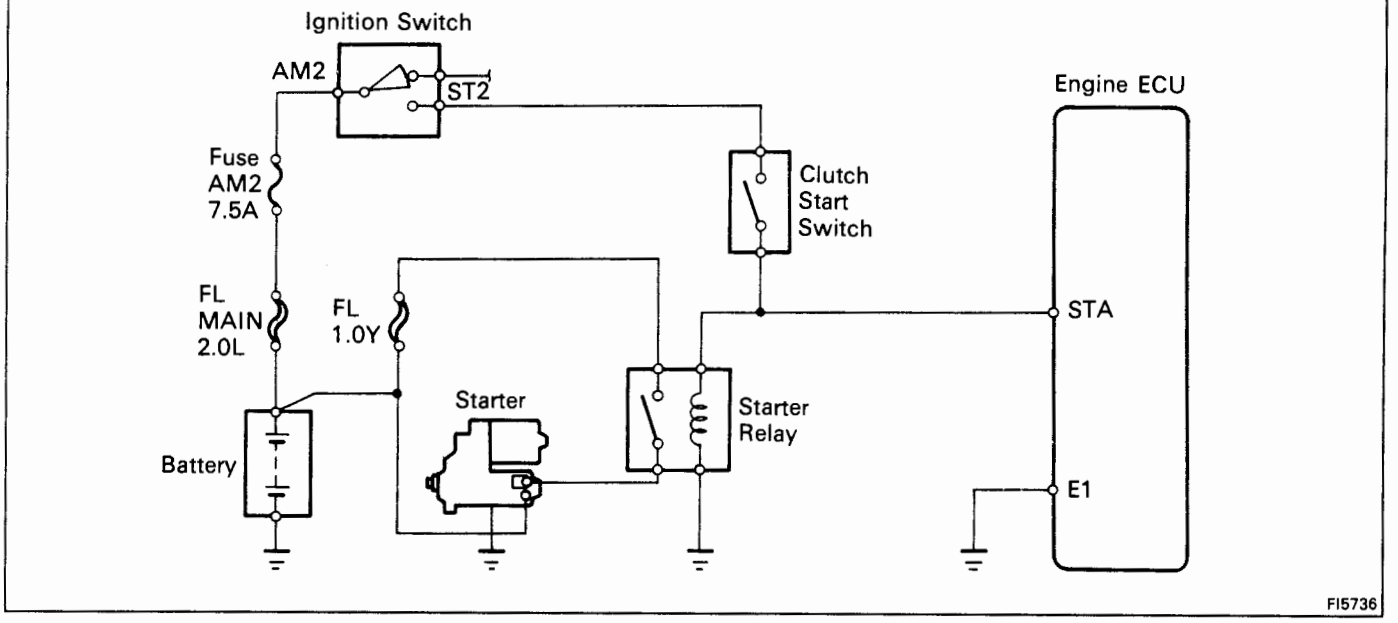

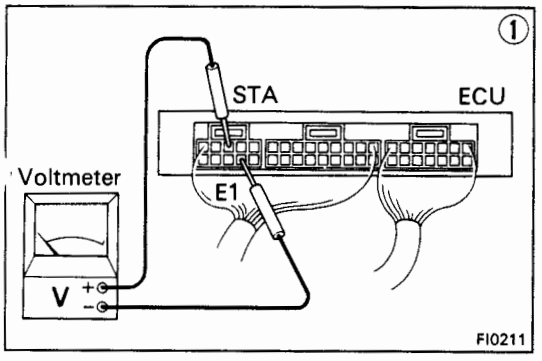

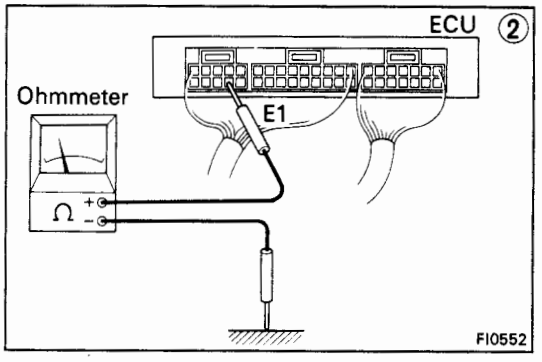

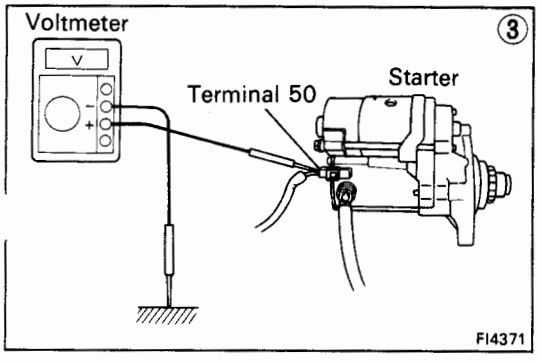

① There is no voltage between ECU terminals STA and E1. **(IG SW START)**

Check starter operation.
- OK → Check wiring between ECU terminal STA and ignition switch terminal ST2.
  - BAD → Repair or replace.
  - OK → ② Check wiring between ECU terminal E1 and body ground.
    - OK → Try another ECU.
    - BAD → Repair or replace.
- BAD → Check fuse, fusible links, battery, wiring, ignition switch, clutch start switch and starter relay.
  - BAD → Repair or replace.
  - OK → ③ Check that there is voltage at terminal 50 of starter. **(IG SW START) STD voltage: 6 – 14 V**
    - OK → Check starter.
    - NO → Check wiring between ignition switch terminal ST2 and starter terminal 50.

No.	Terminals	Trouble	Condition	STD voltage
9	IGT – E1	No voltage	Idling	0.8 – 1.2 V

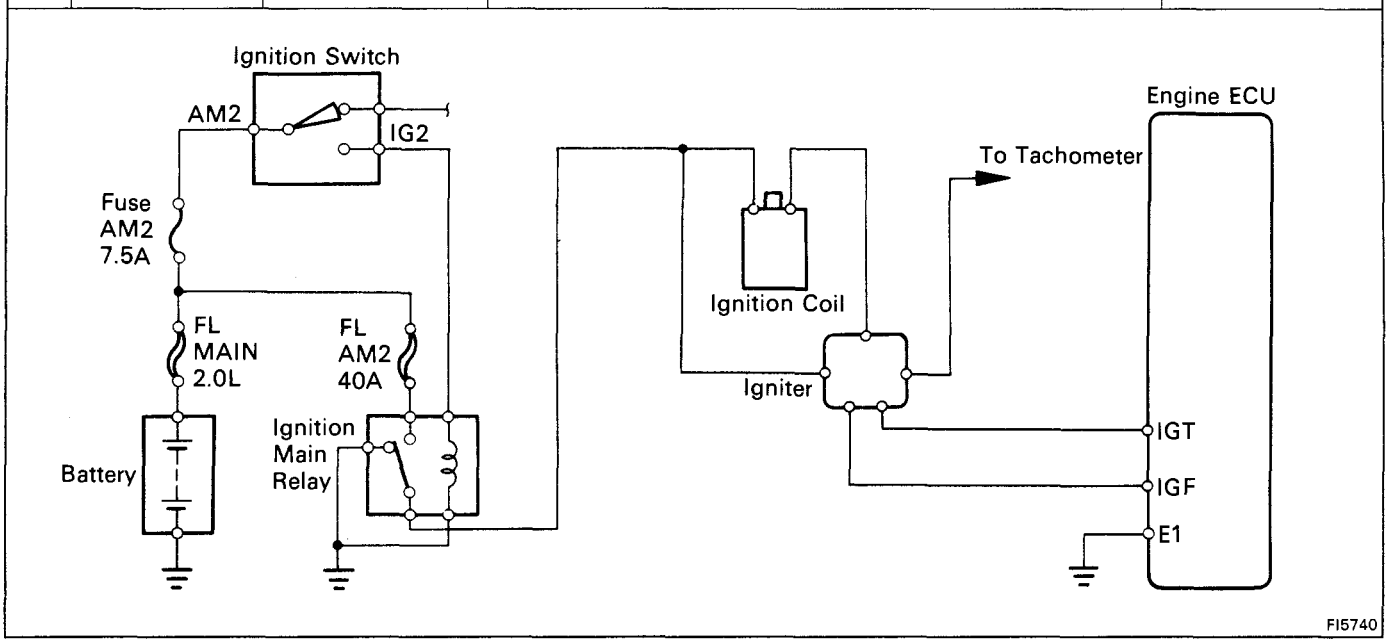

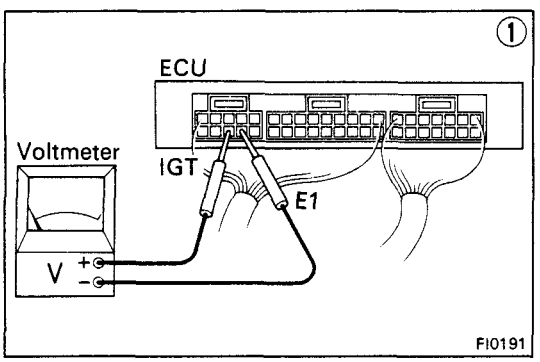

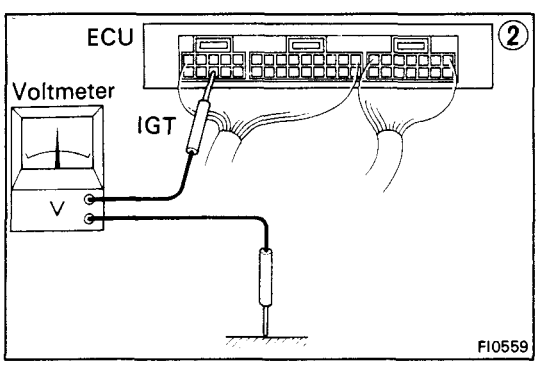

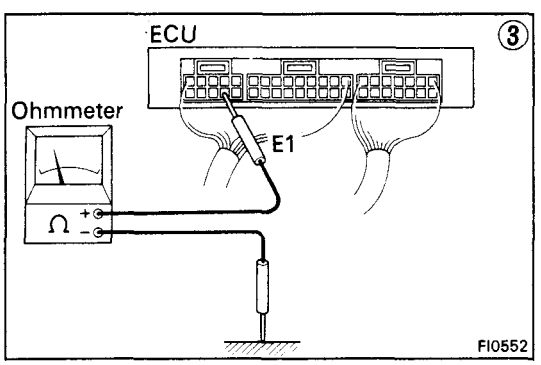

① There is no voltage between ECU terminals IGT and E1. **(Idling)**

↓

② Check that there is voltage between ECU terminal IGT and body ground. **(Idling)**

NO → ↓ OK

③ Check wiring between ECU terminal E1 and body ground. → BAD → Repair or Replace.

↓ OK

Try another ECU.

Check fuse, fusible links, ignition switch and ignition main relay. → BAD → Repair or replace.

↓ OK

Check distributor. (See page IG-13) → BAD → Repair or replace.

↓ OK

Check wiring between ECU and battery. → BAD → Repair or replace.

↓ OK

Check igniter. (See page IG-13) → BAD → Repair or replace.

No.	Terminals	Trouble	Condition	STD voltage
10	ISCC ISCO – E1	No voltage	IG SW ON	8 – 1.2 V

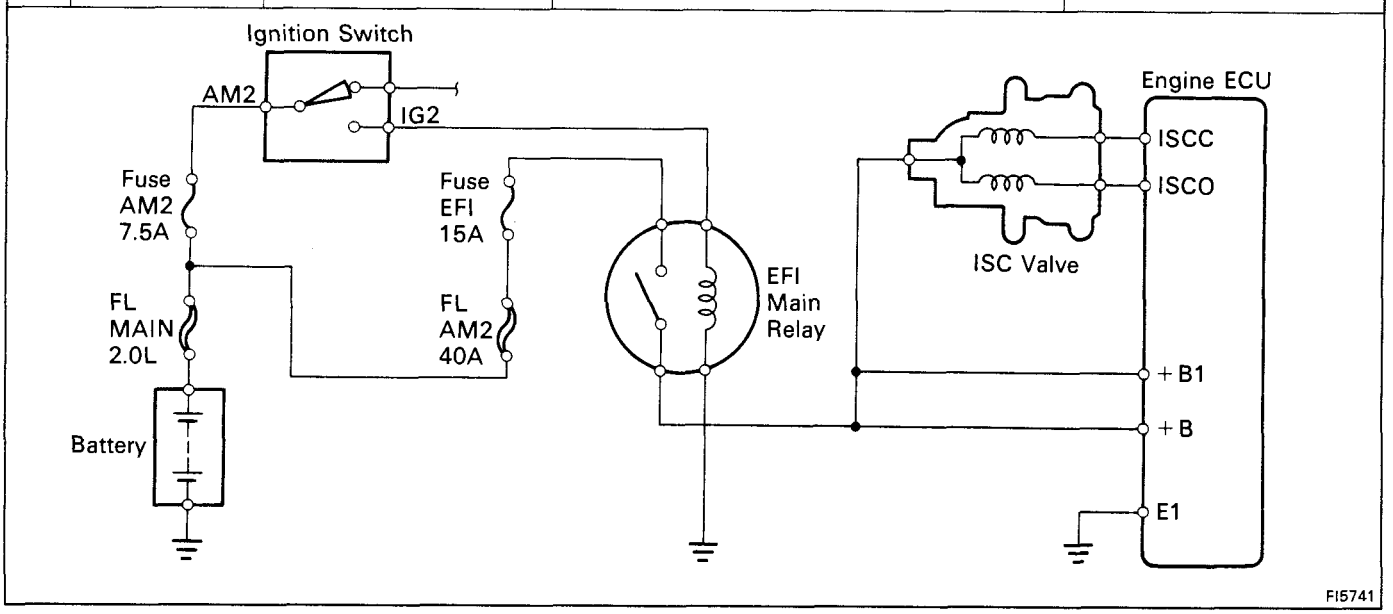

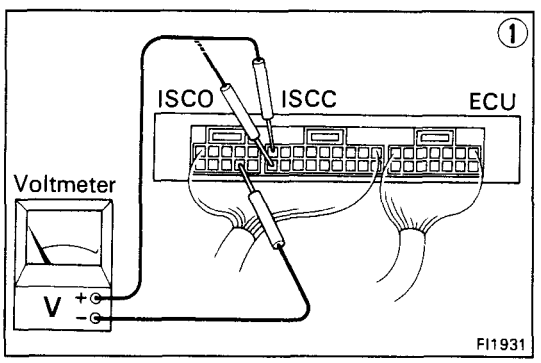

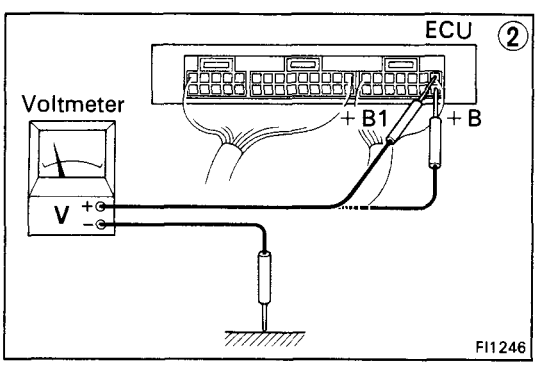

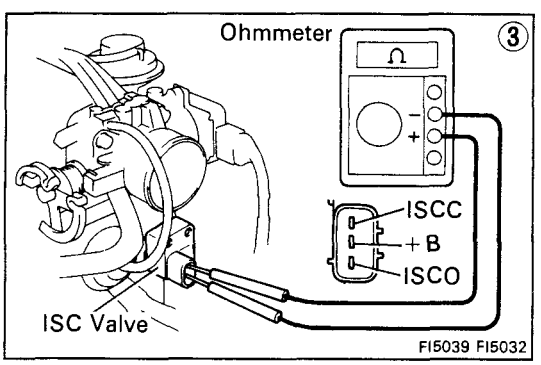

① There is no voltage between ECU terminals ISCC or ISCO and E1. **(IG SW ON)**

↓

② Check that there is voltage between ECU terminal +B or +B1 and body ground. **(IG SW ON)**

- NO → Refer to No.1. (See page FI-54)
- OK ↓

③ Check resistance between ISC valve terminals +B and ISCC or ISCO
STD resistance:
Approx. 19.3 – 22.3 Ω

- BAD → Replace ISC valve.
- OK ↓

Check wiring between ECU and ISC valve.

- BAD → Repair or replace wiring.
- OK ↓

Try another ECU.

No.	Terminals	Trouble	Condition	STD voltage
11	W – E1	No voltage	No troable ("CHECK warning light off) and engine running	10 – 14 V

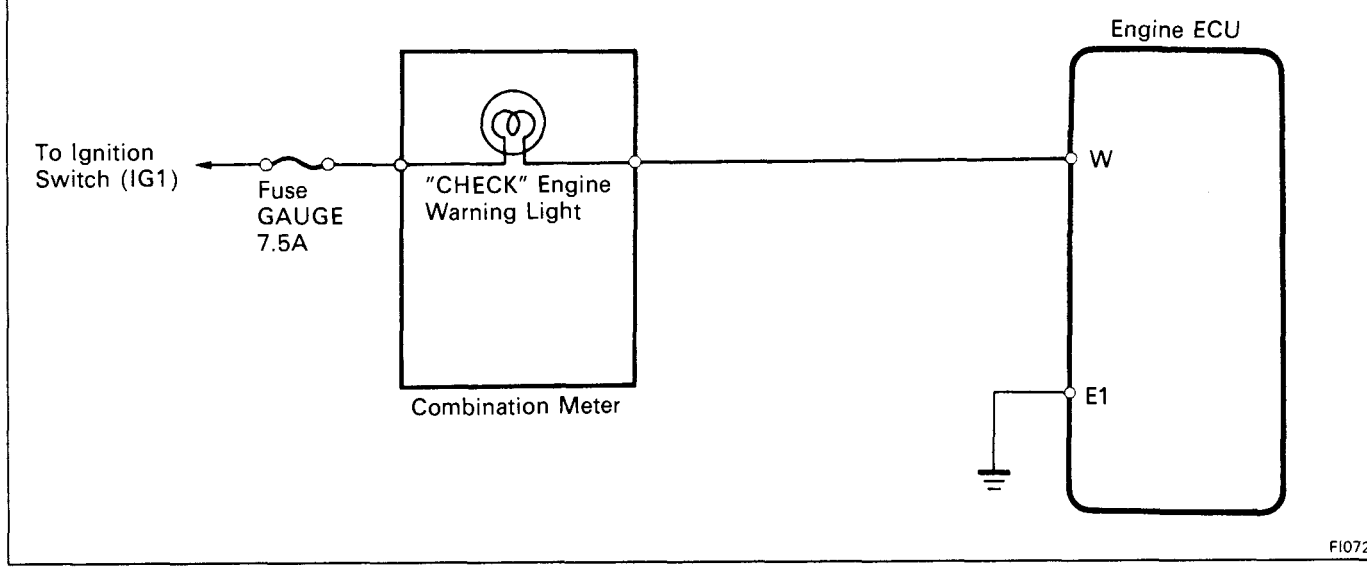

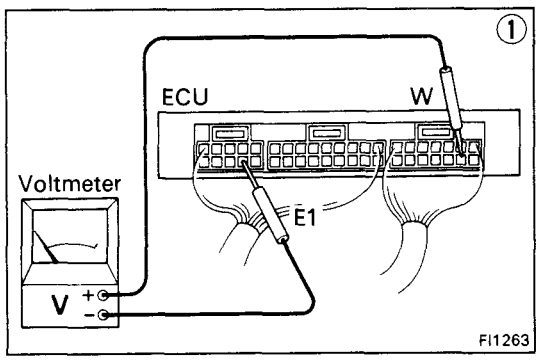

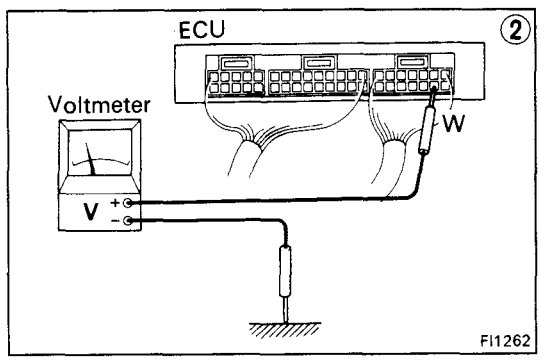

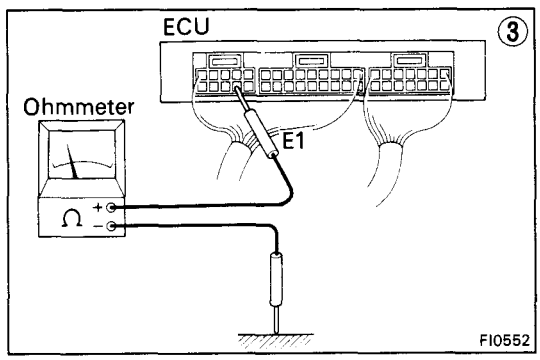

① There is no voltage between ECU terminals W and E1. **(Idling)**

↓

② Check that there is voltage between ECU terminal W and body ground.

- NO → Check fuse GAUGE (7.5A) and "CHECK" engine warning light.
- OK → ③ Check wiring between ECU terminal E1 and body ground.
  - OK → Try another ECU.
  - BAD → Repair or replace.

Check fuse GAUGE (7.5A) and "CHECK" engine warning light.

- OK → Check wiring between ECU terminal W and fuse.
- BAD → Repair or replace.
  - Fuse blows again → Check wiring between ECU terminal W and fuse.

Check wiring between ECU terminal W and fuse.

- BAD → Repair or replace.

No.	Terminals	Trouble	Condition	STD voltage
12	A/C – E1	No voltage	Air conditioning ON	8 – 14 V

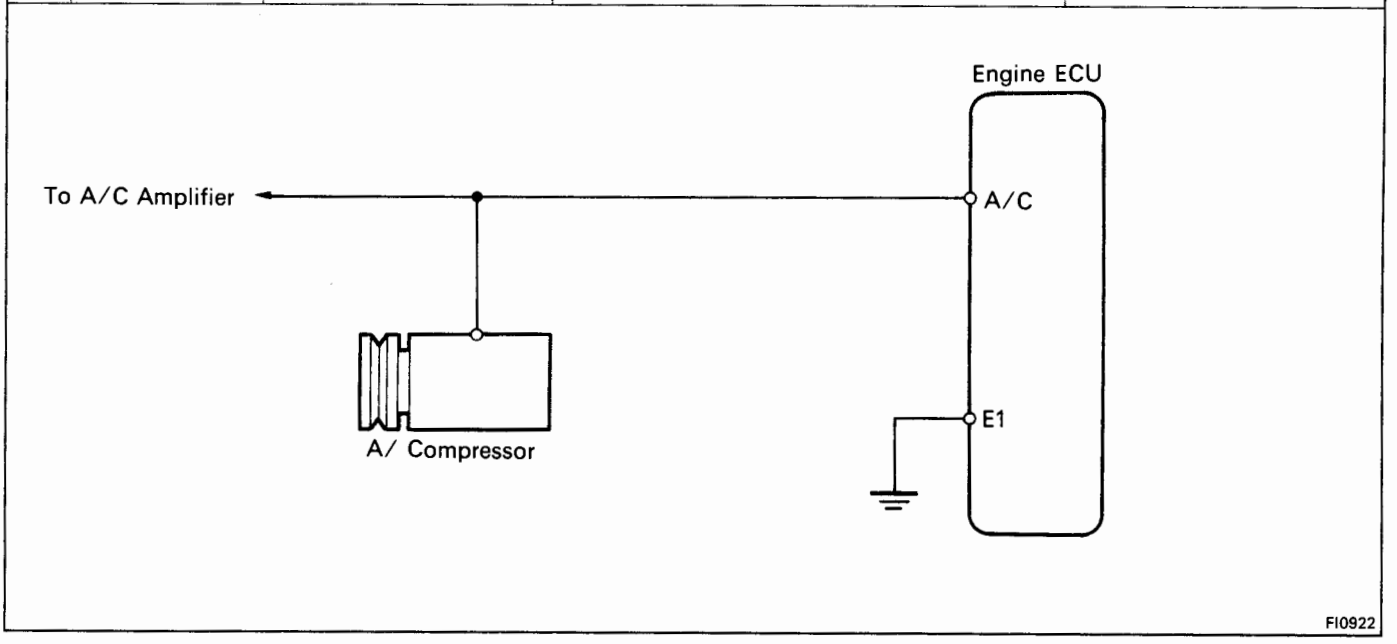

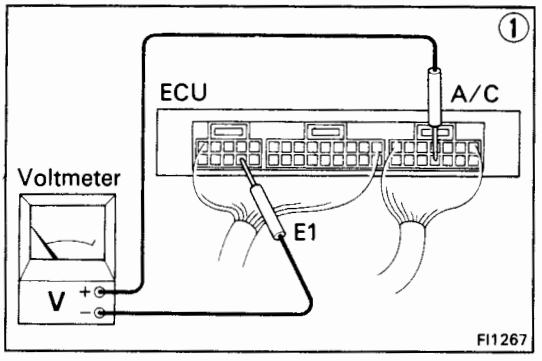

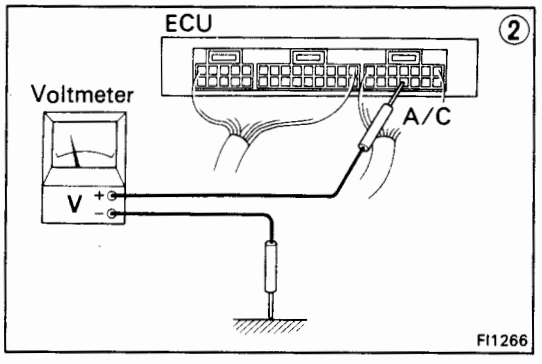

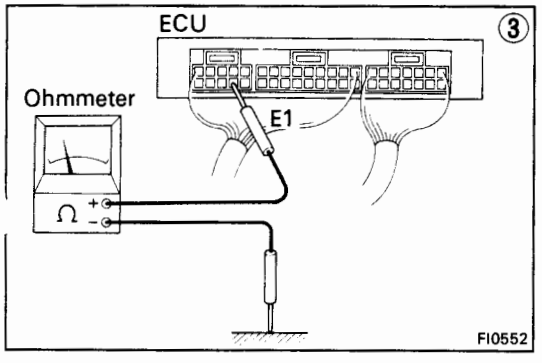

① There is no voltage between ECU terminals A/C and E1. **(Air conditioning ON)**

② Check that there is voltage between ECU terminal A/C and body ground.

- NO → Check compressor running.
- OK → ③ Check wiring between ECU terminal E1 and body ground.
  - OK → Try another ECU.
  - BAD → Repair or replace.

Check compressor running.

- OK → Check wiring between ECU terminal A/C and amplifier.
  - BAD → Repair or replace.
- BAD → Check that there is voltage between amplifier terminal and body ground.
  - BAD → Repair or replace.
  - OK → Check wiring between amplifier and ECU or compressor.
    - BAD → Repair or replace.

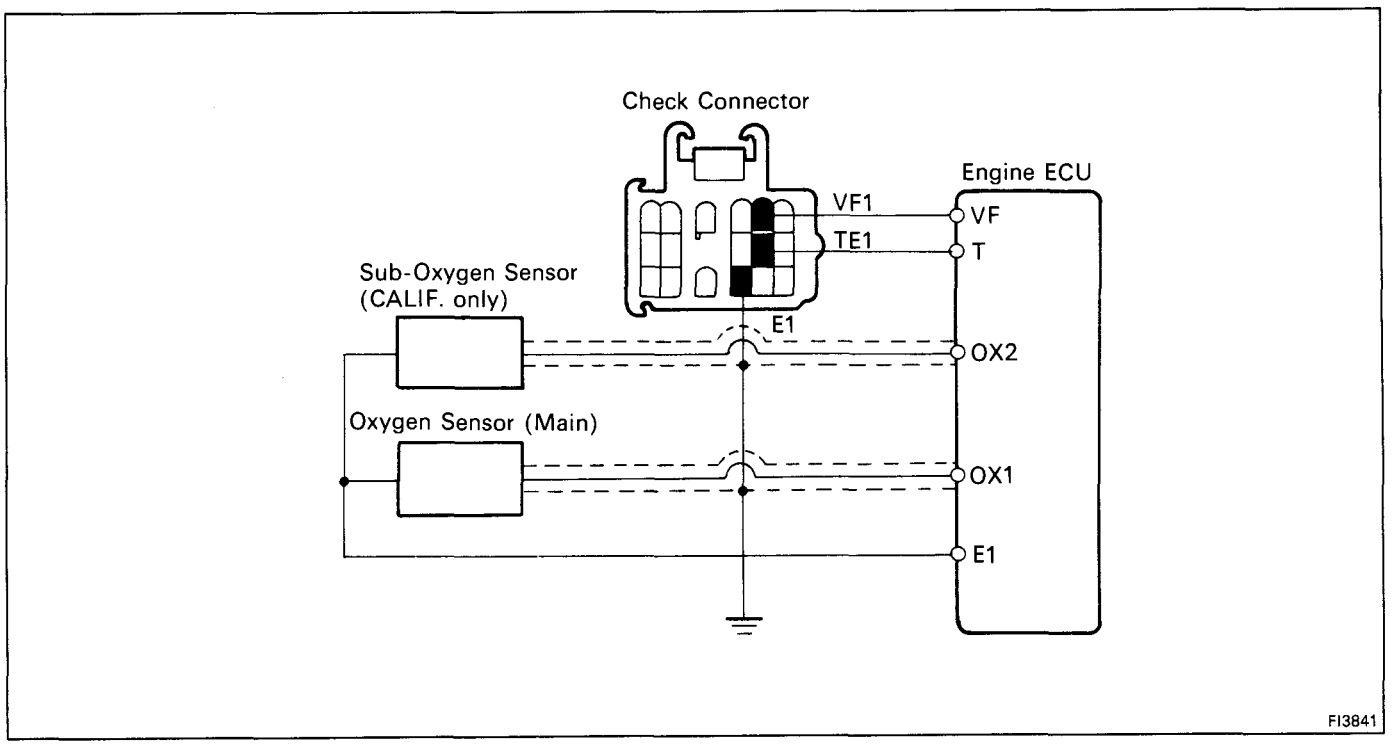

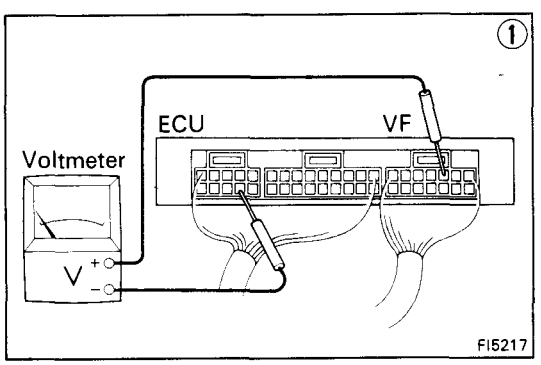

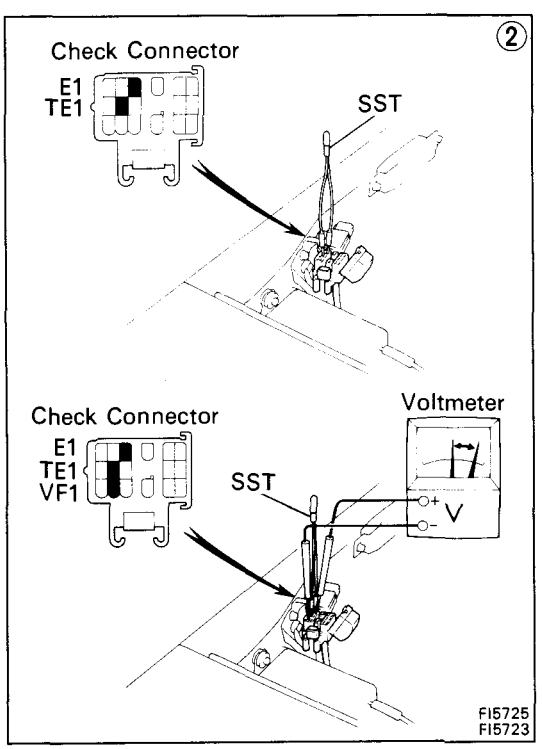

① There is no voltage between ECU terminals VF and E1

↓

Check that there is voltage between ECU terminal VF and body ground.

No ↓ OK

Check wiring between ECU terminal E1 and body ground.

OK ↓ BAD

Try another ECU. → BAD → Repair or replace.

↓

Is air leaking into air induction system? → BAD → Repair or replace.

↓ OK

Check spark plugs. (See page IG-11) → BAD → Repair or replace

↓ OK

Check distributor and Ignition system. (See page IG-4) → BAD → Repair or replace.

↓ OK

Check fuel pressure. (See page FI-87) → BAD → Repair or replace.

↓ OK

Check injectors. (See page FI-120) → BAD → Repair or replace.

↓ OK

* Check cold start injector. (See page FI-102) → BAD → Repair or replace.

↓ OK

Check vacuum sensor. (See page FI-170) → BAD → Repair or replace.

↓ OK

② Check operation of oxygen sensors(s). (See page FI-173 and 175) → OK → System normal

↓ BAD

Check wiring between oxygen senor(s) and ECU. → BAD → Repair wiring.

↓ OK

Replace oxygen sensor(s).

* Rich malfunction only

CALIF. only

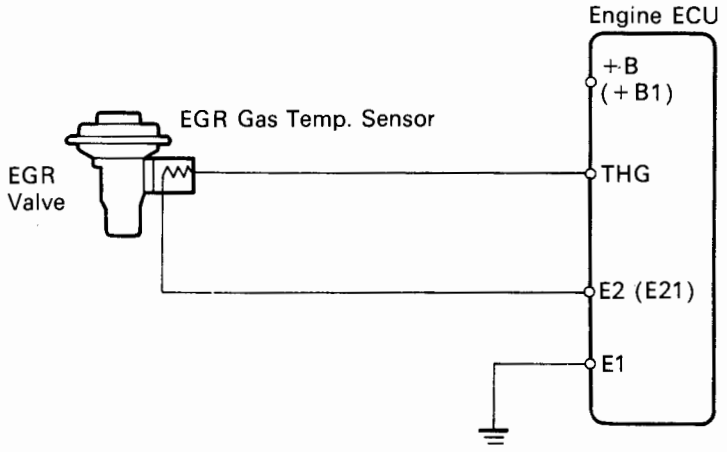

FI2680

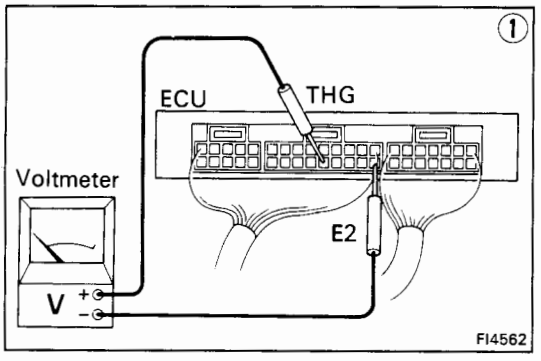

FI4562

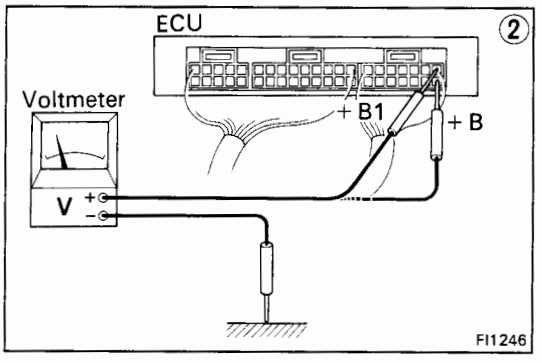

FI1246

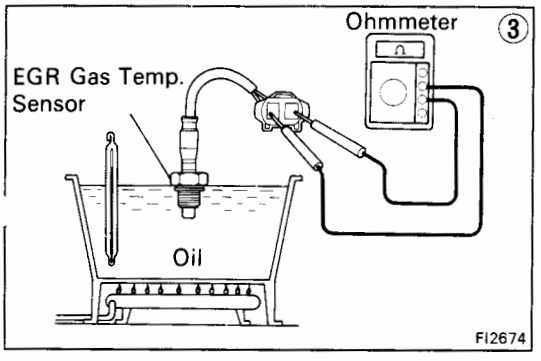

FI2674

① There is no voltage between ECU terminals THG and E2. **(IG SW ON)**

② Check that there is voltage between ECU terminal +B or +B1 and body ground. **(IG SW ON)**

- OK → Check wiring between ECU terminal E1 and body ground.
- NO → Refer to No.1. (See page FI-54)

Check wiring between ECU terminal E1 and body ground.

- OK → Check EGR system. (See page EC-24)
- BAD → Repair or replace.

Check EGR system. (See page EC-24)

- BAD → Repair or replace.
- OK → ③ Check EGR gas temp. sensor. (See page FI-172)

③ Check EGR gas temp. sensor. (See page FI-172)

- BAD → Replace EGR gas temp. sensor.
- OK → Check wiring between ECU and EGR gas temp. sensor.

Check wiring between ECU and EGR gas temp. sensor.

- OK → Try another ECU.
- BAD → Repair or replace.

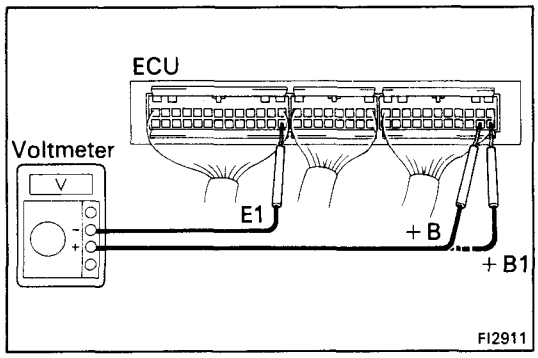

EFI SYSTEM CHECK PROCEDURE (5S-FE A/T)

HINT:

- Perform all voltage measurements with the connectors disconnected.
- Verify that the battery voltage is 11 V or more when the ignition switch is in "ON" position.

Using a voltmeter with high impedance (10 kΩ/V minimum), measure the voltage at each terminal of the wiring connectors.

Terminals of ECU

Symbol	Terminal	Symbol	Terminal	Symbol	Terminal
E01	POWER GROUND		–	A/C	A/C COMPRESSOR
E02	POWER GROUND	G1	DISTRIBUTOR	ACT	A/C AMPLIFIER
No.10	INJECTOR	NE	DISTRIBUTOR	SPD	SPEED SENSOR (for Meter)
	–	E1	ENGINE GROUND	OD1	CC ECU
No.20	INJECTOR	VF	CHECK CONNECTOR	PS	POWER STEERING ECU
	–	G⊖	DISTRIBUTOR		–
ISCO	ISC VALVE	DC	CHECK CONNECTOR	OD2	OD MAIN SWITCH
EGR	EGR VALVE	T	CHECK CONNECTOR		–
ISCC	ISC VALVE	OX1	OXYGEN SENSOR (MAIN)	PSCT	POWER STEERING ECU
	–	* OX2	SUB-OXYGEN SENSOR		–
FPU	FUEL PRESSURE VSV		–		–
	–		–		–
STJ	COLD START INJECTOR	THW	WATER TEMP. SENSOR	B/K	STOP LIGHT SWITCH
IGT	IGNITER	IDL	THROTTLE POSITION SENSOR		–
S1	ECT SOLENOID	THA	INTAKE AIR TEMP. SENSOR		–
L	NEUTRAL START SWITCH	VTA	THROTTLE POSITION SENSOR	FC	CIRCUIT OPENING RELAY
S2	ECT SOLENOID	PIM	VACUUM SENSOR	ELS	HEADLIGHT SWITCH DEFOGGER SWITCH
2	NEUTRAL START SWITCH	* THG	EGR GAS TEMP. SENSOR	+B1	EFI MAIN RELAY
SL	ECT SOLENOID	VC	VACUUM SENSOR	BATT	BATTERY
SP2	SPEED SENSOR (for ECT)	E2	SENSOR GROUND	+B	EFI MAIN RELAY
IGF	IGNITER	STA	STARTER SWITCH		
E21	SENSOR GROUND	NSW	NEUTRAL START SWITCH		

* CALIF. only

Engine & ECT ECU Terminals

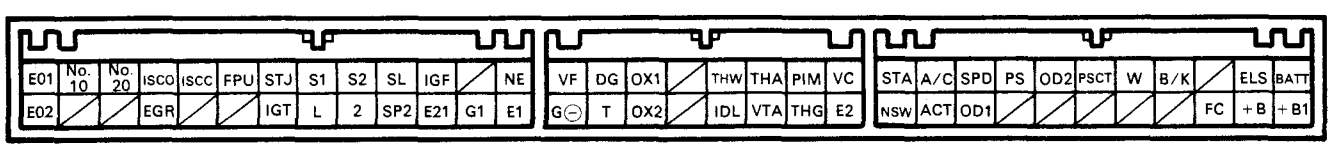

FI2796

Voltage at ECU Wiring Connectors

No.	Terminals	Condition		STD voltage (V)	See page
1	+ B + B1 – E1	IG SW ON		10 – 14	FI-70
2	BATT – E1	—		10 – 14	FI-71
3	IDL – E2	IG SW ON	Throttle valve open	8 – 14	FI-72
	VC – E2		—	4.5 – 5.5	
	VTA – E2		Throttle valve fully closed (Throttle opener must be cancelled first)	0.8 – 1.2	
			Throttle valve fully open	3.2 – 4.2	
4	PIM – E2	IG SW ON		3.3 – 3.9	FI-74
	VC – E2			4.5 – 5.5	
5	No.10 – E01 No.20 – E02			10 – 14	FI-75
6	THA – E2	IG SW ON	Intake air temp. 20°C (68°F)	1.7 – 3.1	FI-76
7	THW – E2		Coolant temp. 80°C (176°F)	0.3 – 0.8	FI-77
8	STA – E1	Cranking		6 – 14	FI-78
9	IGT – E1	Cranking or idling		0.8 – 1.2	FI-79
10	ISCC ISCO – E1	IG SW ON		8 – 14	FI-80
11	W – E1	No trouble ("CHECK" engine warning light off) and engine running		10 – 14	FI-81
12	A/C – E1	IG SW ON	Air conditioning ON	8 – 14	FI-82

Engine & ECT ECU Terminals

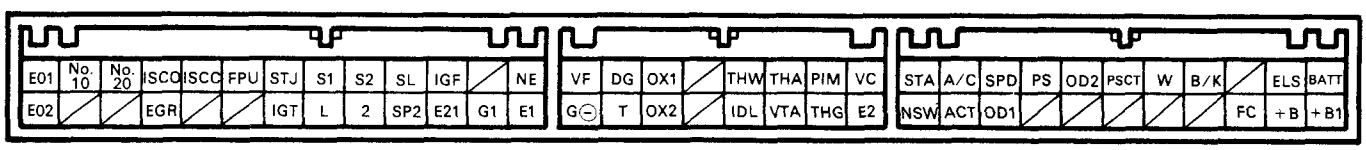

FI2796

No.	Terminals	Trouble	Condition	STD voltage
1	+B +B1 – E1	No voltage	IG SW ON	10 – 14V

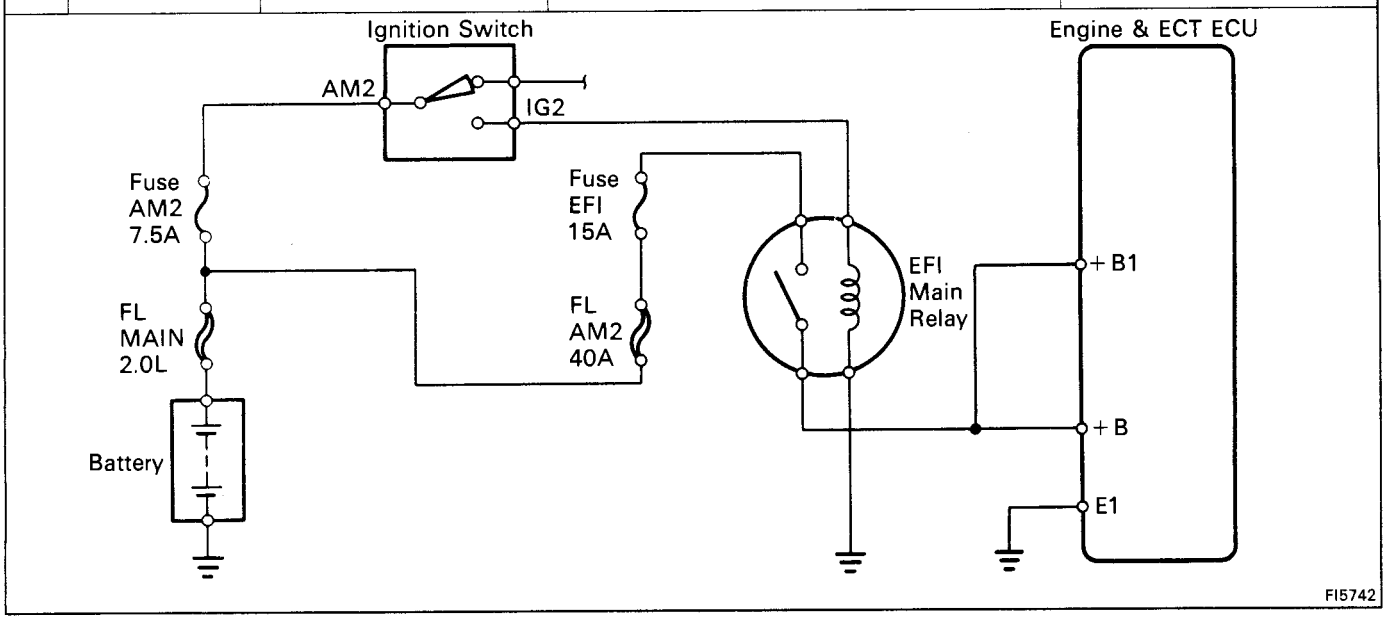

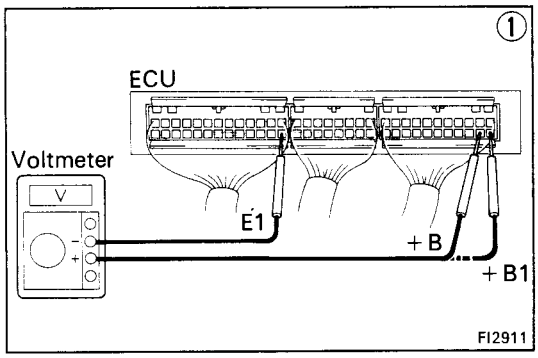

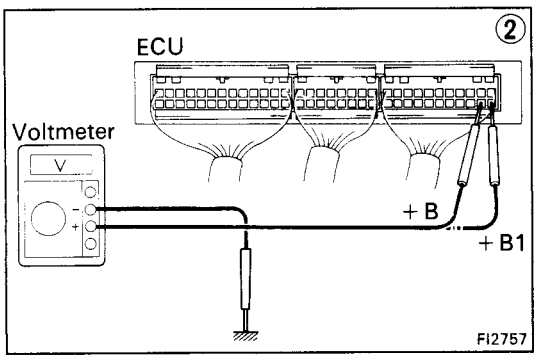

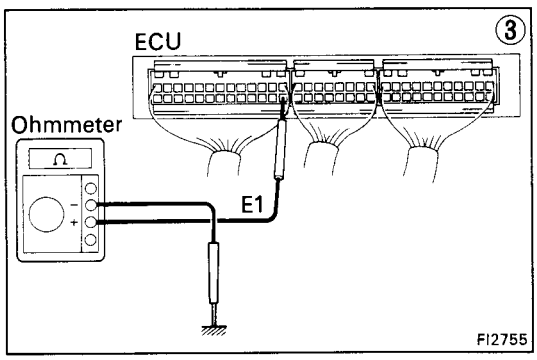

① There is no voltage between ECU terminals +B or +B1 and E1. **(IG SW ON)**

↓

② Check that there is voltage between ECU terminal +B or +B1 and body ground. **(IG SW ON)**

- NO → Check fuses, fusible links and ignition switch.
- OK → ③ Check wiring between ECU terminal E1 and body ground.
  - OK → Try another ECU.
  - BAD → Repair or replace.

Check fuses, fusible links and ignition switch.
- BAD → Repair or replace.
- OK ↓

Check EFI main relay. (See page FI-156)
- BAD → Replace.
- OK ↓

Check wiring between EFI main relay and battery.
- BAD → Repair or replace.

No.	Terminals	Trouble	Condition	STD voltage
2	BATT – E1	No voltage	–	10 – 14 V

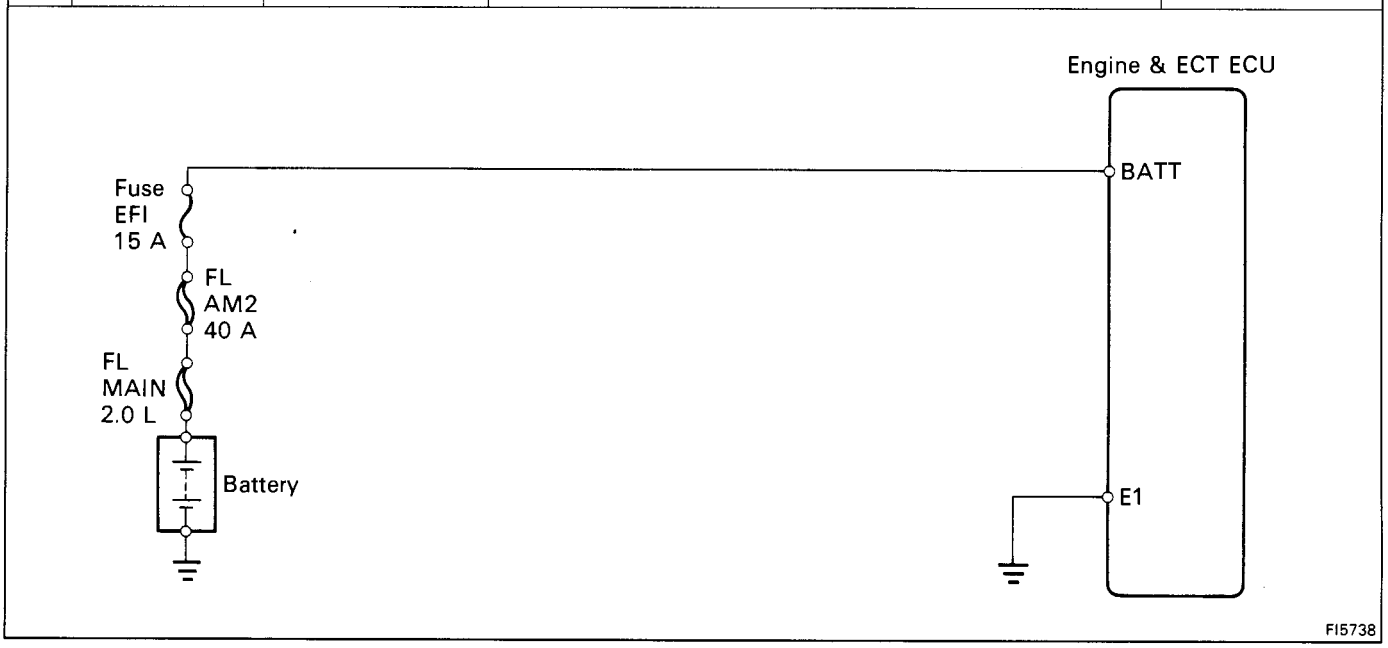

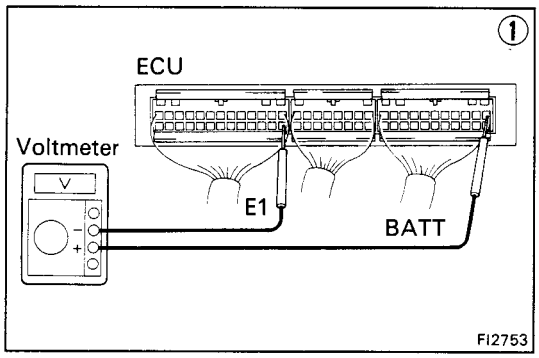

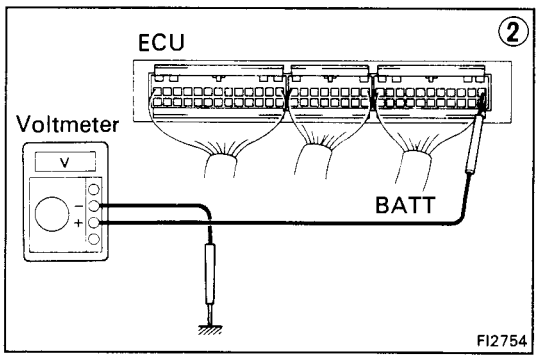

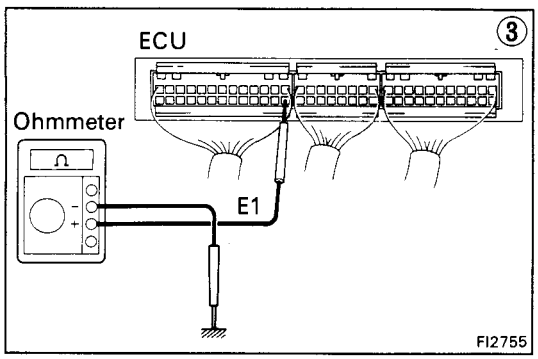

① There is no voltage between ECU terminals BATT and E1.

↓

② Check that there is voltage between ECU terminal BATT and body ground.

- NO → Check fuse and fusible links.
- OK ↓

③ Check wiring between ECU terminal E1 and body ground.

- OK → Try another ECU.
- BAD → Repair or replace.

Check fuse and fusible links.

- BAD → Replace.
- OK ↓

Check wiring between ECU terminal and battery.

- BAD → Repair or replace.

No.	Terminals	Trouble		Condition	STD Voltage
3	IDL – E2	No voltage	IG SW ON	Throttle valve open	8 – 14 V
	VC – E2			–	4.5 – 5.5 V
	VTA – E2			Throttle valve fully closed (Throttle opener must be cancelled first)	0.8 – 1.2 V
				Throttle valve fully open	3.2 – 4.2 V

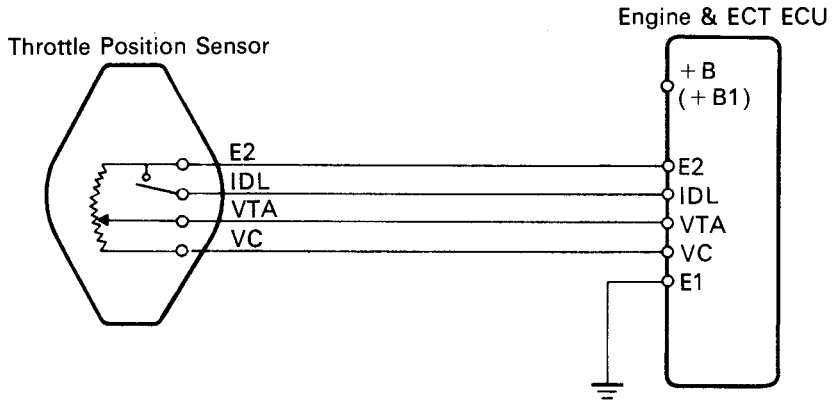

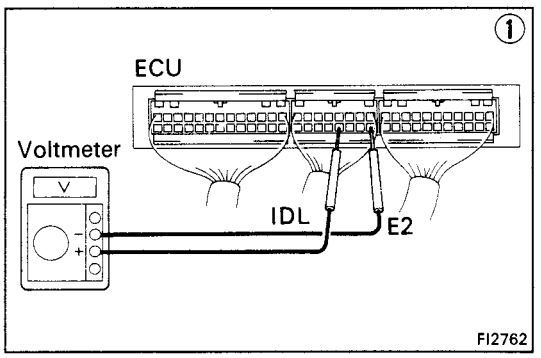

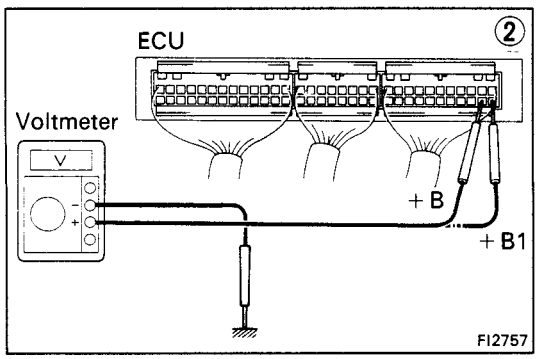

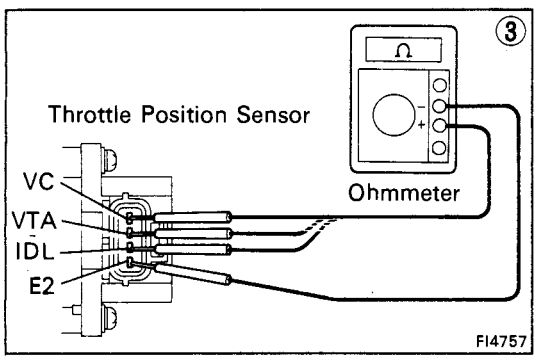

● **IDL – E2**

① There is no voltage between ECU terminals IDL and E2. **(IG SW ON)** (Throttle valve open)

② Check that there is voltage between ECU terminal +B (+B1) and body ground. **(IG SW ON)**

- NO → Refer to No.1. (See page FI-70)
- OK → Check wiring between ECU terminal E1 and body ground.
  - OK → Try another ECU.
  - BAD → Repair or replace.

Refer to No.1. (See page FI-70)
- BAD → Repair or replace.
- OK → ③

③ Check throttle position sensor. (See page FI-141)
- BAD → Repair or replace throttle position sensor.
- OK → Check wiring between ECU and throttle position sensor.
  - BAD → Repair or replace.
  - OK → Try another ECU.

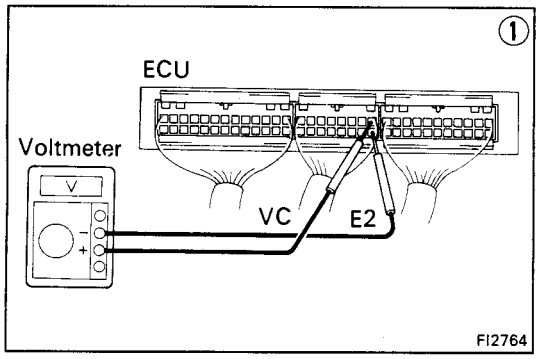

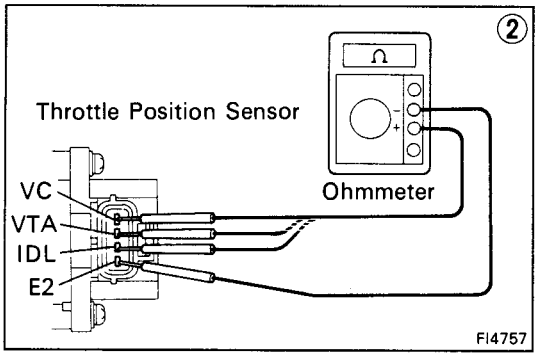

● **VC – E2**

① There is no voltage between ECU terminals VC and E2. **(IG SW ON)**

↓

Check that there is voltage between ECU terminal +B (+B1) and body ground. **(IG SW ON)**

- OK → ② Check throttle position sensor. (See page FI-141)
  - BAD → Repair or replace.
  - OK → Check wiring between ECU and throttle position sensor.
    - OK → Try another ECU.
    - BAD → Repair or replace wiring.
- NO → Refer to No.1. (See page FI-70)

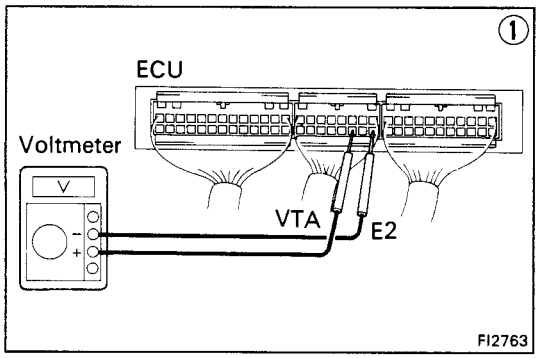

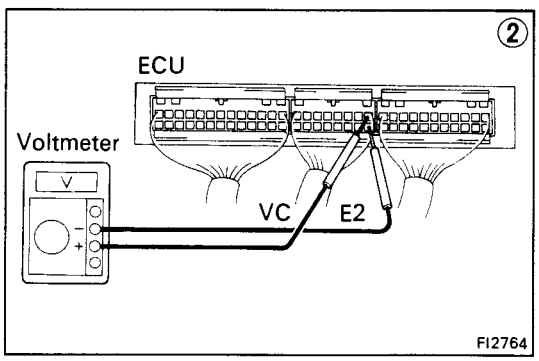

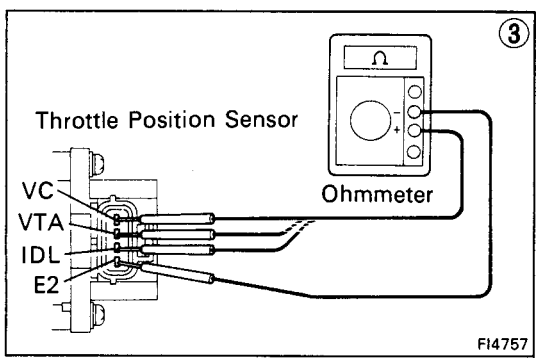

● **VTA – E2**

① There is no specified voltage at ECU terminals VTA and E2. **(IG SW ON)**

↓

② Check that there is voltage between ECU terminals VC and E2. **(IG SW ON)**

- NO → Refer to VC – E2 trouble section.
- OK →

↓

③ Check throttle position sensor. (See page FI-141)
- BAD → Repair or replace.
- OK ↓

Check wiring between ECU and throttle position sensor.
- BAD → Repair or replace.
- OK ↓

Try another ECU.

No.	Terminals	Trouble	Condition	STD voltage
4	PIM – E2	No voltage	IG SW ON	3.3 – 3.9 V
	VC – E2			4.5 – 5.5 V

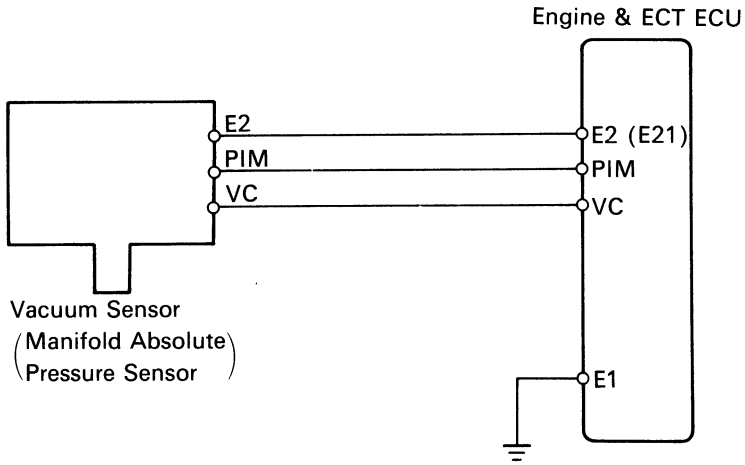

FI1226

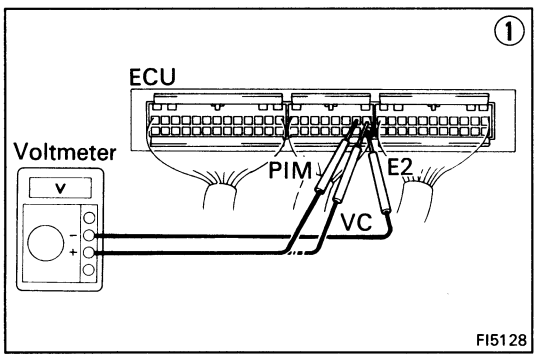

FI5128

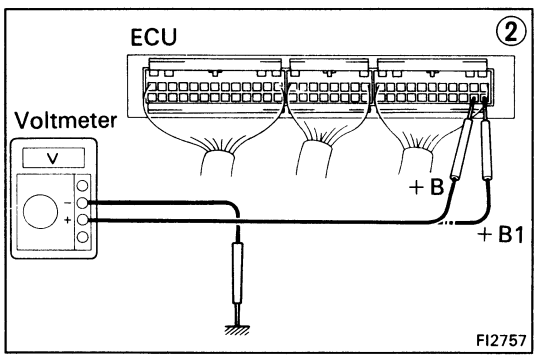

FI2757

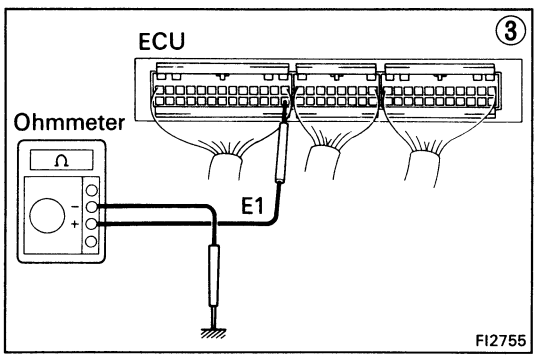

FI2755

● **PIM – E2, VC – E2**

① There is no voltage between ECU terminals PIM or VC and E2. **(IG SW ON)**

↓

② Check that there is voltage between ECU terminal +B (+B1) and body ground. **(IG SW ON)**

- NO → Refer to No.1. (See page FI-70)
- OK ↓

③ Check wiring between ECU terminal E1 and body ground.

- BAD → Repair or replace.
- OK ↓

Check vacuum sensor. (See page FI-170)

- BAD → Replace vacuum sensor.
- OK ↓

Check wiring between ECU and vacuum sensor.

- BAD → Repair or replace.
- OK → Try another ECU.

No.	Terminals	Trouble	Condition	STD voltage
5	No.10 – E01 No.20 – E02	No voltage	IG SW ON	10 – 14 V

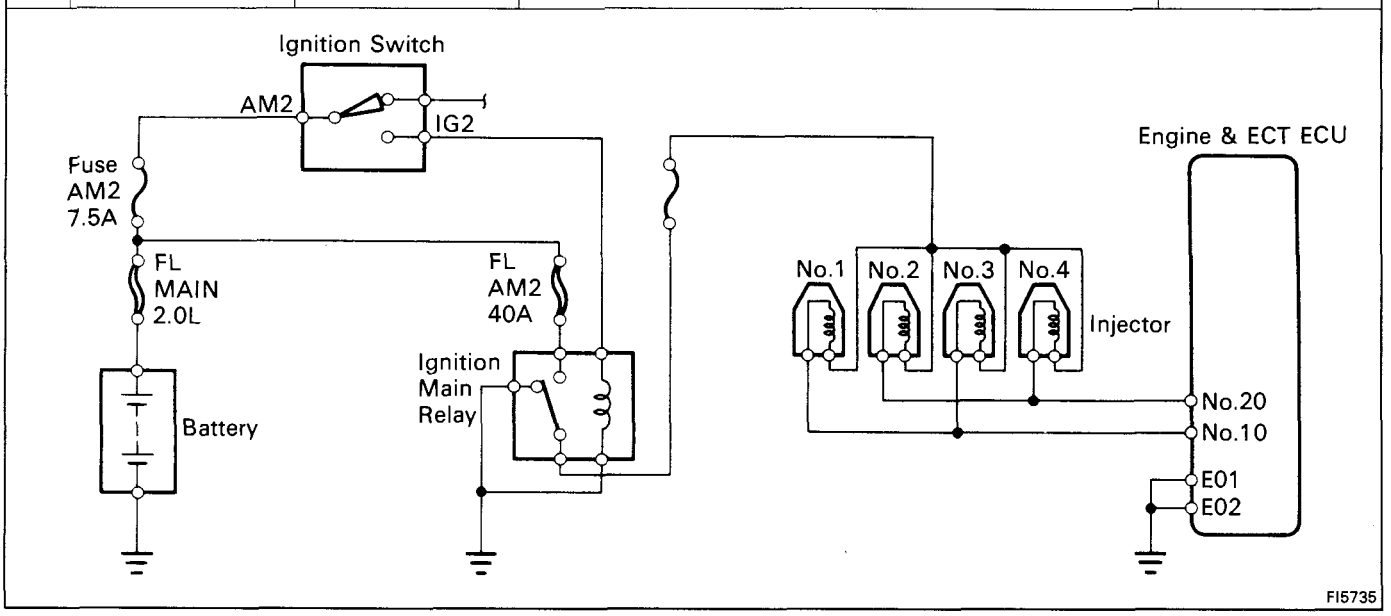

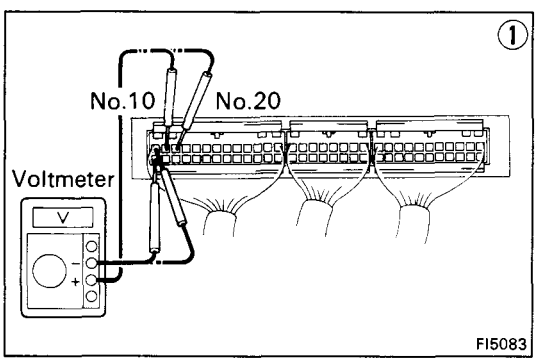

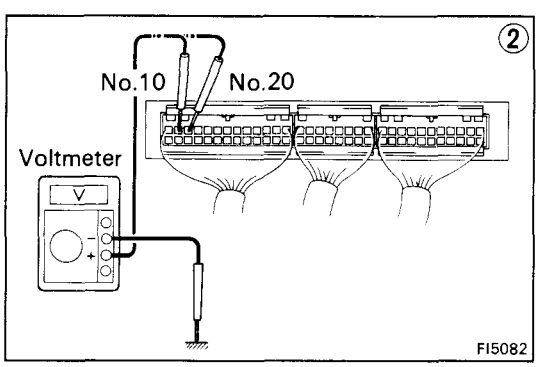

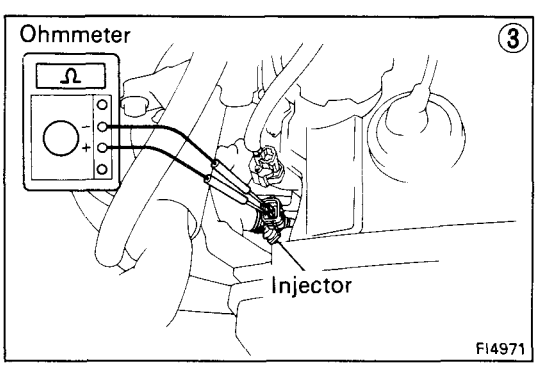

① There is no voltage between ECU terminals No.10 and/or No.20 and E01 and/E02. **(IG SW ON)**

↓

② Check that there is voltage between ECU terminal No.10 and/or No.20 and body ground.

- NO → Check fuse, fusible links, ignition switch and ignition relay.
- OK → Check wiring between ECU terminal E01 and/or E02 and body ground.
  - OK → Try another ECU.
  - BAD → Repair or replace.

Check fuse, fusible links, ignition switch and ignition relay.
- BAD → Repair or replace.
- OK ↓

③ Check resistance of each injector.
STD resistance: Approx. 13.8 Ω

- OK → Check wiring between ECU terminal No.10 and/or No.20 and battery.
  - BAD → Repair or replace.
- OK → Replace injector.

No.	Terminals	Trouble	Condition		STD voltage
6	THA – E2	No voltage	IG SW ON	Intake air temperature 20°C (68°F)	1.7 – 3.1 V

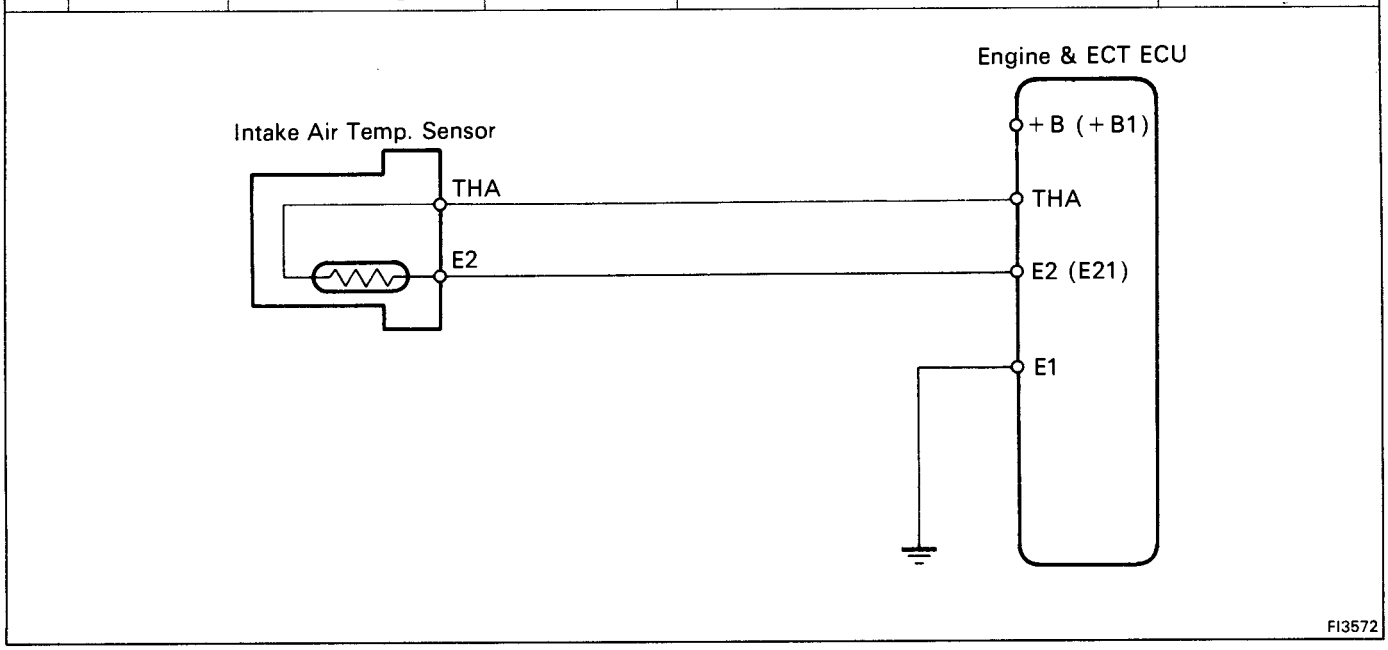

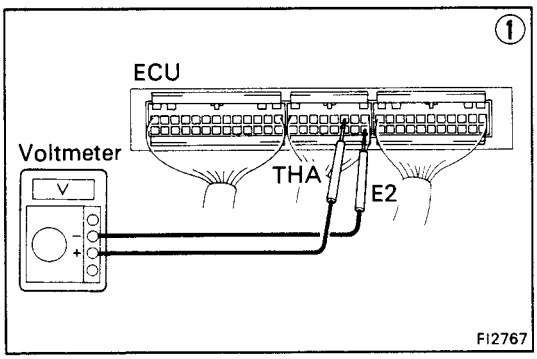

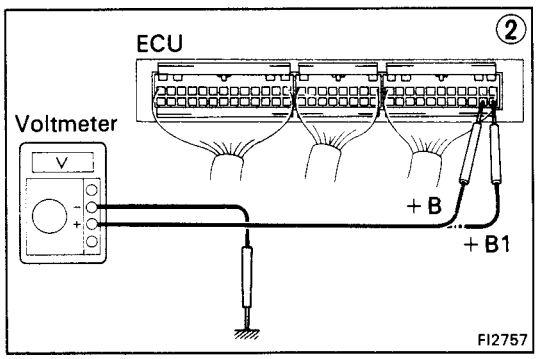

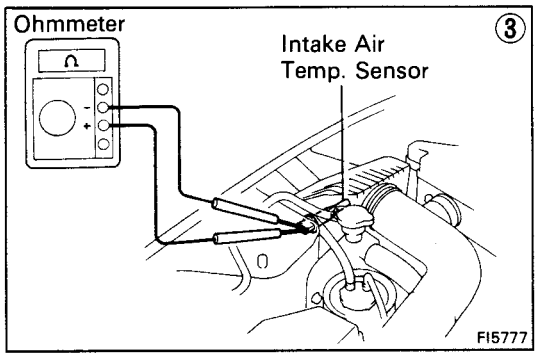

① There is no voltage between ECU terminals THA and E2. **(IG SW ON)**

↓

② Check that there is voltage between ECU terminal +B or +B1 and body ground. **(IG SW ON)**

- NO → Refer to No.1. (See page FI-70)
- OK ↓

Check wiring between ECU terminal E1 and body ground.

- BAD → Repair or replace.
- OK ↓

③ Check intake air temp. sensor. (See page FI-169)

- BAD → Replace intake air temp. sensor.
- OK ↓

Check wiring between ECU and intake air temp. sensor.

- BAD → Repair or replace.
- OK → Try another ECU.

No.	Terminals	Trouble	Condition		STD voltage
7	THW – E2	No voltage	IG SW ON	Coolant temperature 80°C (176°F)	0.3 – 0.8 V

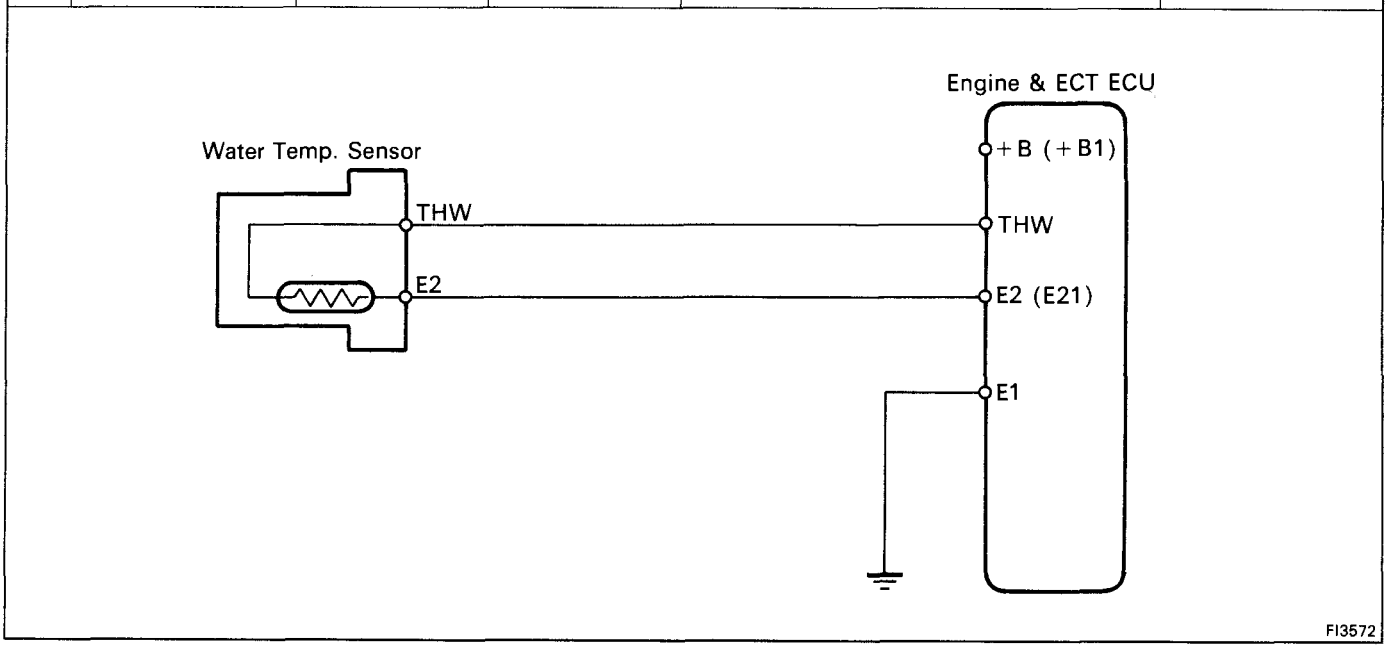

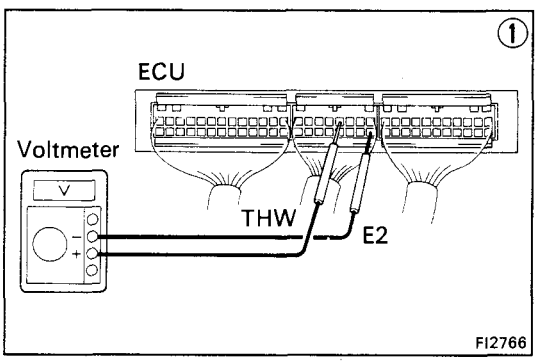

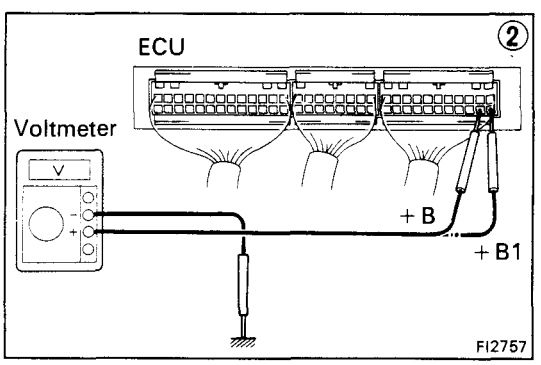

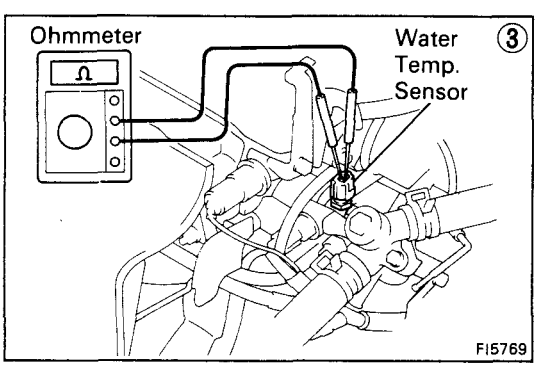

① There is no voltage between ECU terminals THW and E2. **(IG SW ON)**

② Check that there is voltage between ECU terminal +B or +B1 and body ground. **(IG SW ON)**

- OK → Check wiring between ECU terminal E1 and body ground.
- NO → Refer to No.1. (See page FI-70)

Check wiring between ECU terminal E1 and body ground.

- OK → ③ Check water temp. sensor. (See page FI-168)
- BAD → Repair or replace.

③ Check water temp. sensor. (See page FI-168)

- BAD → Replace water temp. sensor.
- OK → Check wiring between ECU and water temp. sensor.

Check wiring between ECU and water temp. sensor.

- OK → Try another ECU.
- BAD → Repair or replace.

No.	Terminals	Trouble	Condition	STD voltage
8	STA – E1	No voltage	Cranking	6 – 14 V

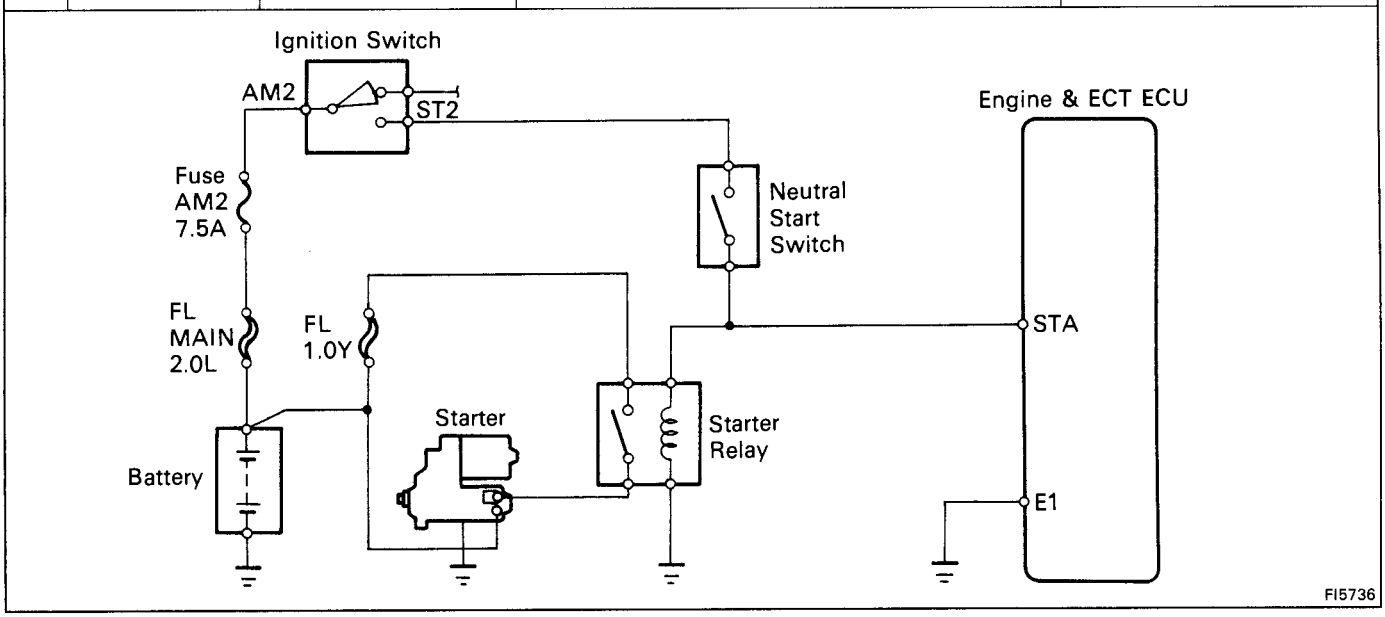

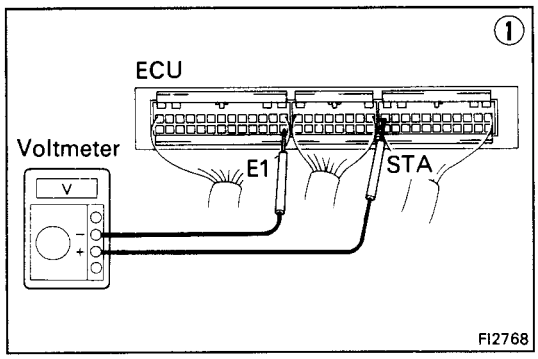

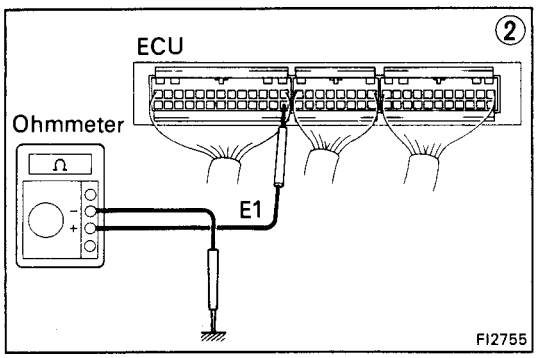

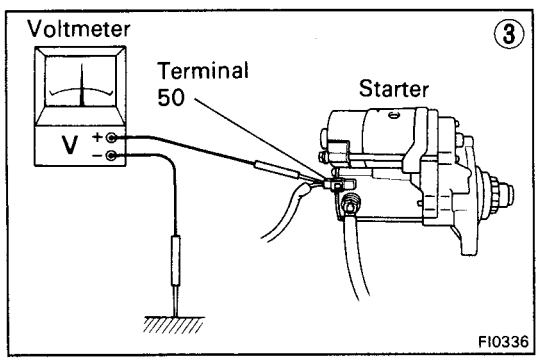

① There is no voltage between eCU terminals STA and E1. **(IG SW START)**

Check starter operation.
- OK → Check wiring between ECU terminal STA and ignition switch terminal ST2.
  - OK → ② Check wiring between ECU terminal E1 and body ground.
    - OK → Try another ECU.
    - BAD → Repair or replace.
  - BAD → Repair or replace.
- BAD → Check fuse, fusible links, battery, wiring, ignition switch, starter relay and neutral start switch.
  - BAD → Repair or replace.
  - OK → ③ Check that there is voltage at terminal 50 of starter. **(IG SW START) STD voltage: 6 – 14 V**
    - OK → Check starter.
    - NO → Check wiring between ignition switch terminal ST2 and starter terminal 50.

No.	Terminals	Trouble	Condition	STD voltage
9	IGT – E1	No voltage	Idling	0.8 – 1.2 V

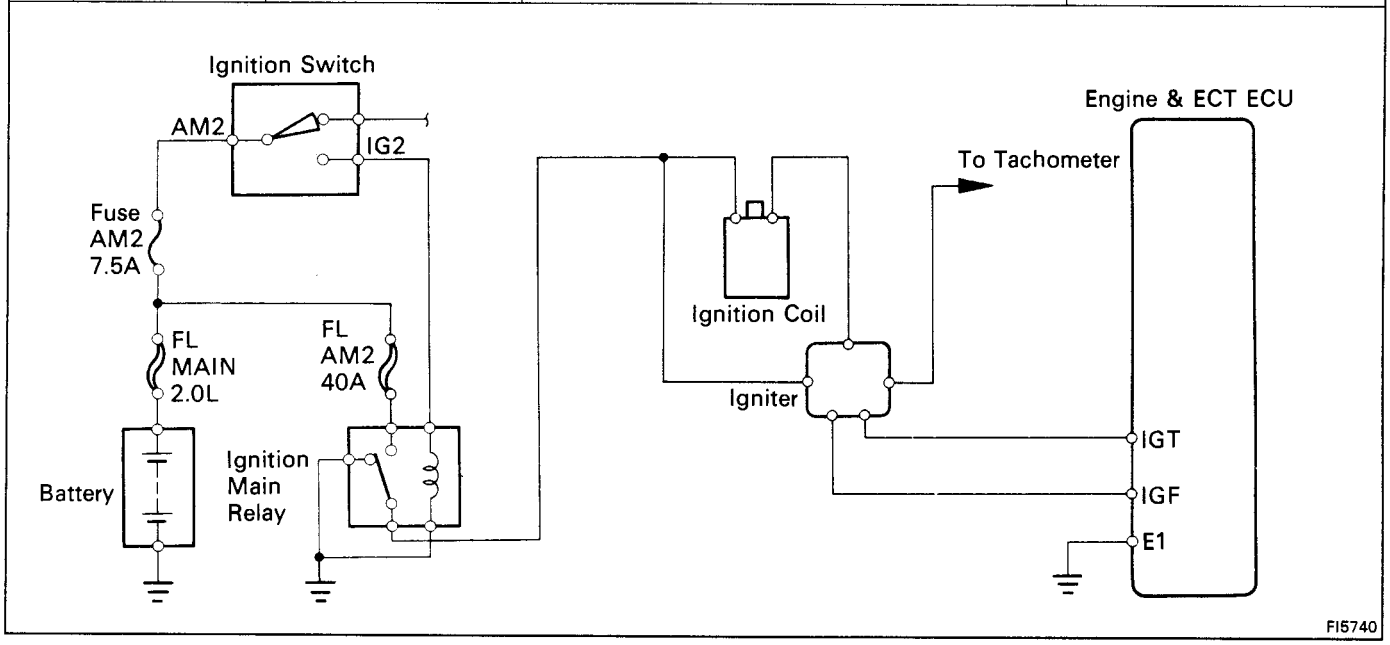

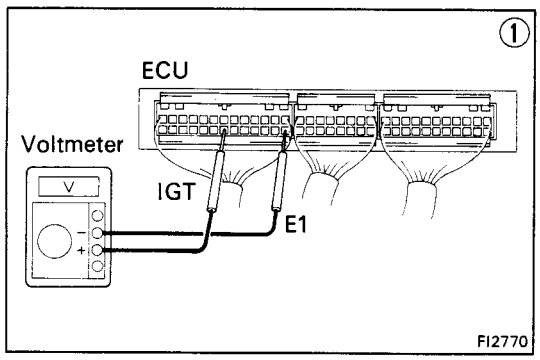

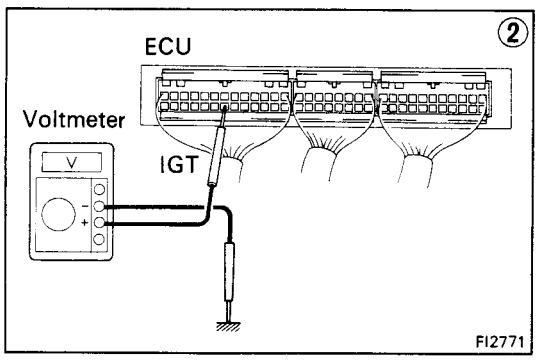

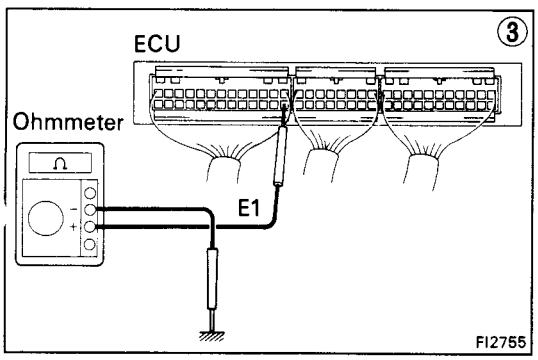

① There is no voltage between ECU terminals IGT and E1. **(Idling)**

↓

② Check that there is voltage between ECU terminal IGT and body ground. **(Idling)**

- NO → Check fuse, fusible links, ignition switch and ignition main relay.
- OK → ③ Check wiring between ECU terminal E1 and body ground.
  - BAD → Repair or Replace.
  - OK → Try another ECU.

Check fuse, fusible links, ignition switch and ignition main relay.
- BAD → Repair or replace.
- OK ↓

Check distributor. (See page IG-13)
- BAD → Repair or replace.
- OK ↓

Check wiring between ECU and battery.
- BAD → Repair or replace.
- OK ↓

Check igniter. (See page IG-13)
- BAD → Repair or replace.

No.	Terminals	Trouble	Condition	STD voltage
10	ISCC, ISCO – E1	No voltage	IG SW ON	8 – 14 V

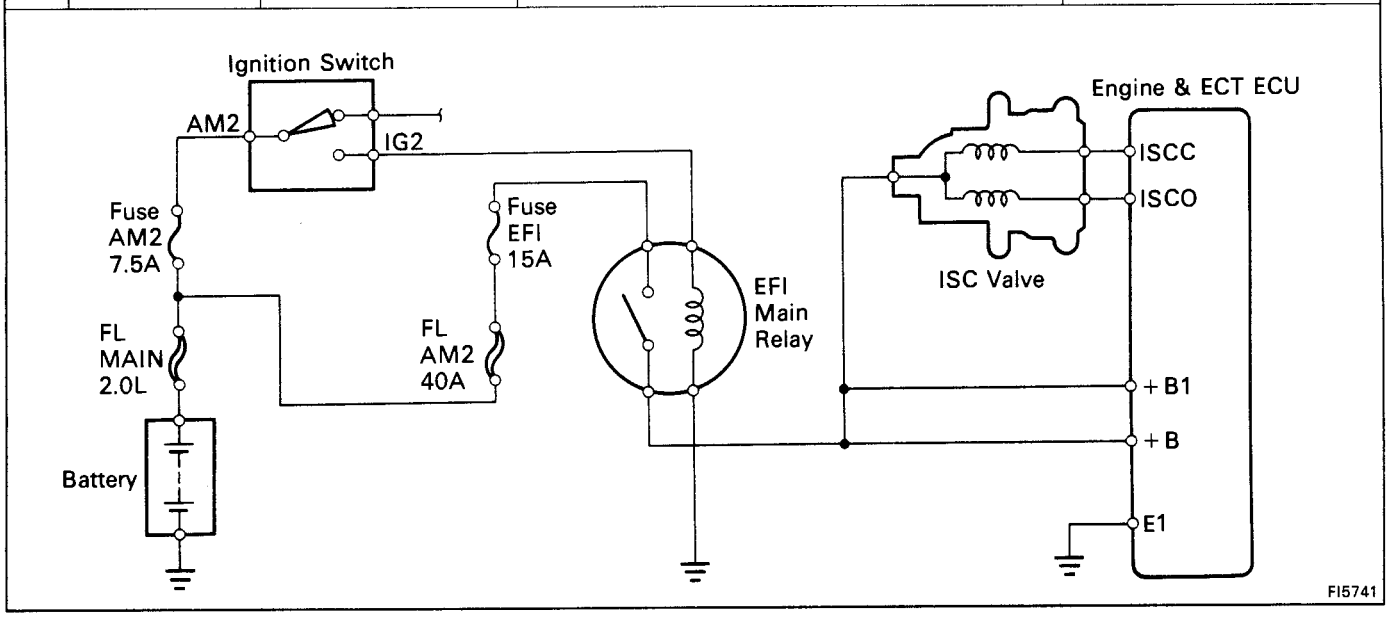

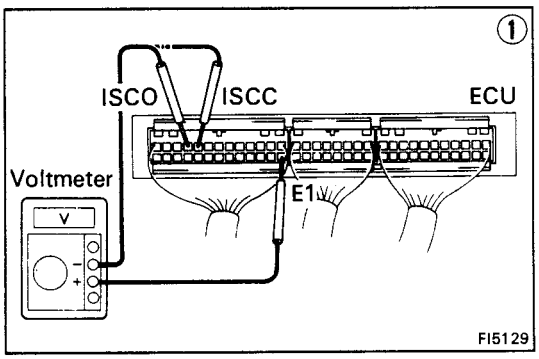

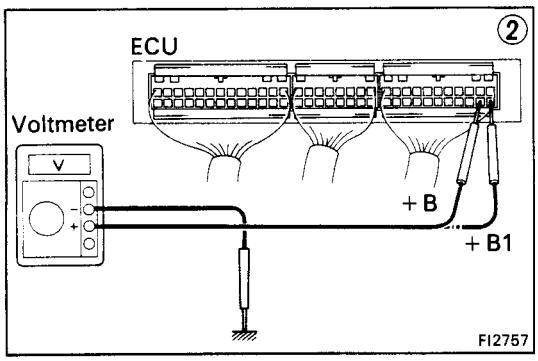

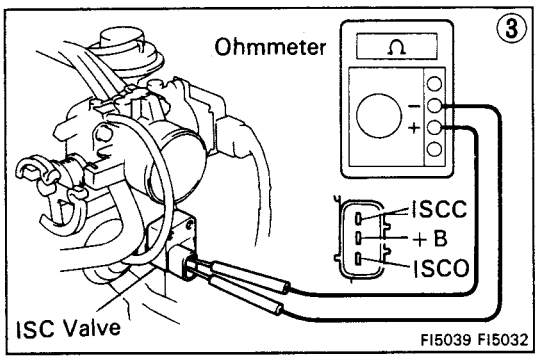

① There is no voltage between ECU terminals ISCC or ISCO and E1. **(IG SW ON)**

↓

② Check that there is voltage between ECU terminal +B or +B1 and body ground. **(IG SW ON)**

- NO → Refer to No.1. (See page FI-70)
- OK ↓

③ Check resistance between ISC valve terminals +B and ISCC or ISCO. **STD resistance: 19.3 – 22.3 Ω**

- BAD → Replace ISC valve.
- OK ↓

Check wiring between ECU and ISC valve.

- BAD → Repair or replace wiring.
- OK ↓

Try another ECU.

No.	Terminals	Trouble	Condition	STD voltage
11	W – E1	No voltage	No trouble ("CHECK" engine warning light off) and engine running.	10 – 14 V

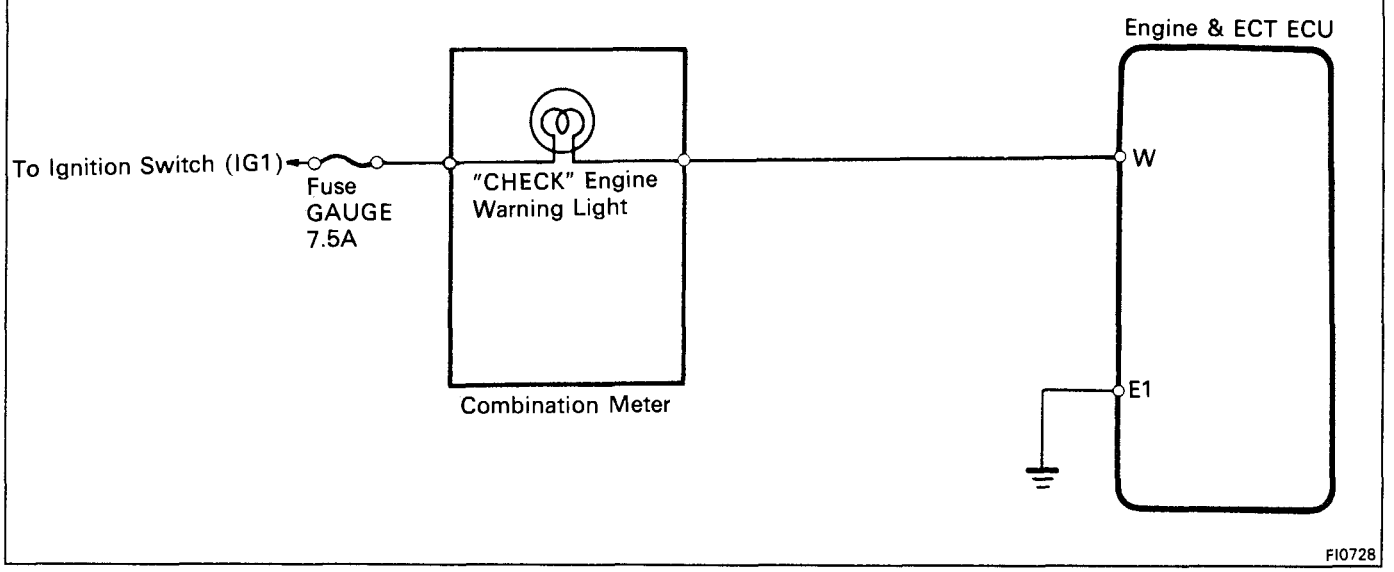

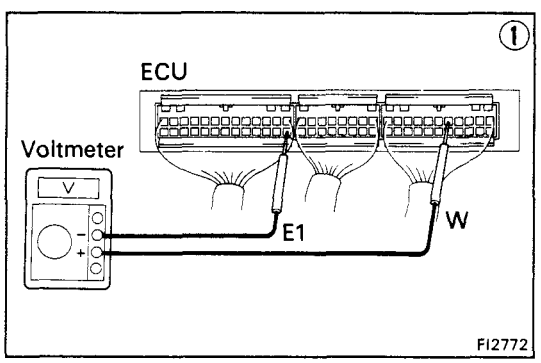

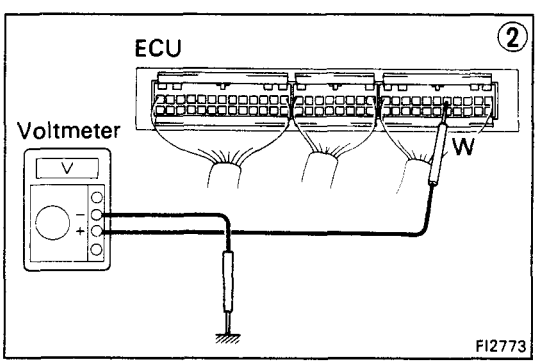

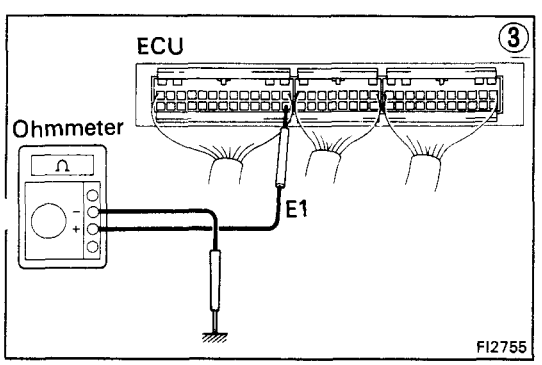

① There is no voltage between ECU terminals W and E1. **(Idling)**

↓

② Check that there is voltage between ECU terminal W and body ground.

NO → Check fuse GAUGE (7.5A) and check engine warning light.

OK → ③ Check wiring between ECU terminal E1 and body ground.

- OK → Try another ECU.
- BAD → Repair or replace.

Check fuse GAUGE (7.5A) and check engine warning light.

- OK → Check wiring between ECU terminal W and fuse.
- BAD → Repair or replace.

Repair or replace.

Fuse blows again.

Check wiring between ECU terminal W and fuse.

- BAD → Repair or replace.

No.	Terminals	Trouble	Condition	STD voltage
12	A/– E1	No voltage	Air conditioning ON	8 – 14 V

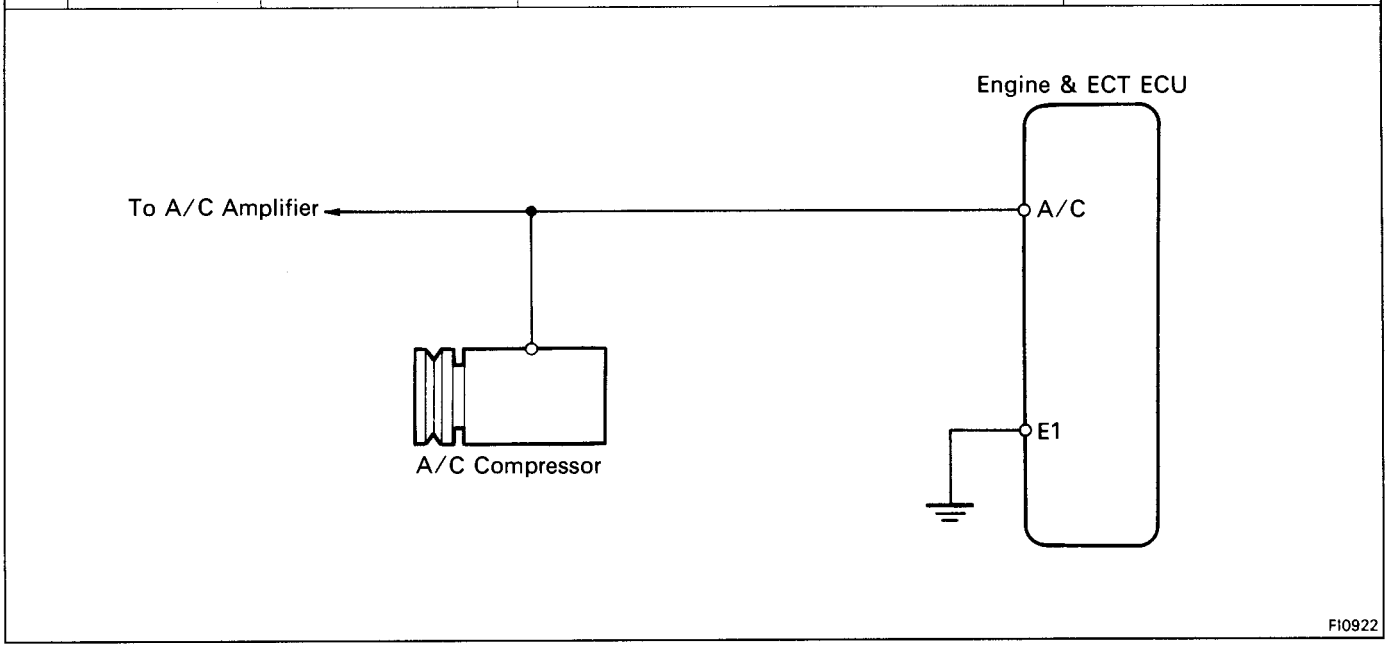

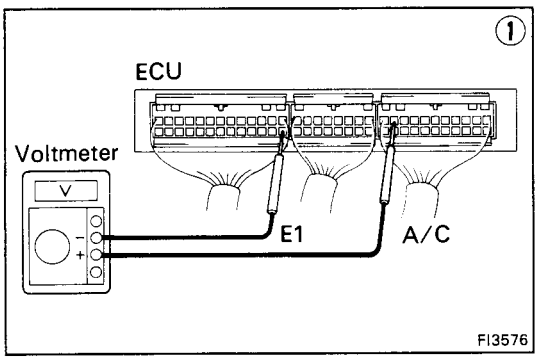

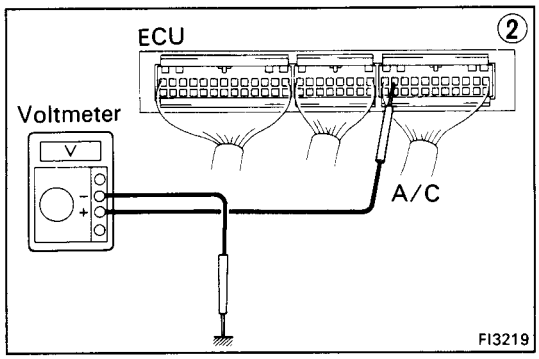

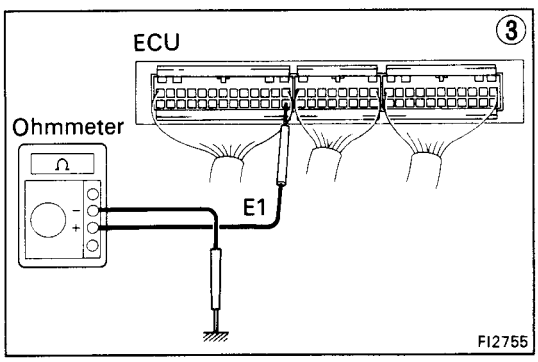

① There is no voltage between ECU terminal A/C and E1. **(Air conditioning ON)**

↓

② Check that there is voltage between ECU terminal A/C and body Ground.

- OK → Check compressor running.
- OK → ③ Check wiring between ECU terminal E1 and body ground.
  - OK → Try another ECU.
  - BAD → Repair or replace.

Check compressor running.

- BAD → Check wiring between ECU terminal A/C and amplifier.
  - BAD → Repair or replace.

↓

Check that there is voltage between amplifier terminal and body ground.

- BAD → Repair or replace.
- OK ↓

Check wiring between amplifier and ECU or compressor.

- BAD → Repair or replace.

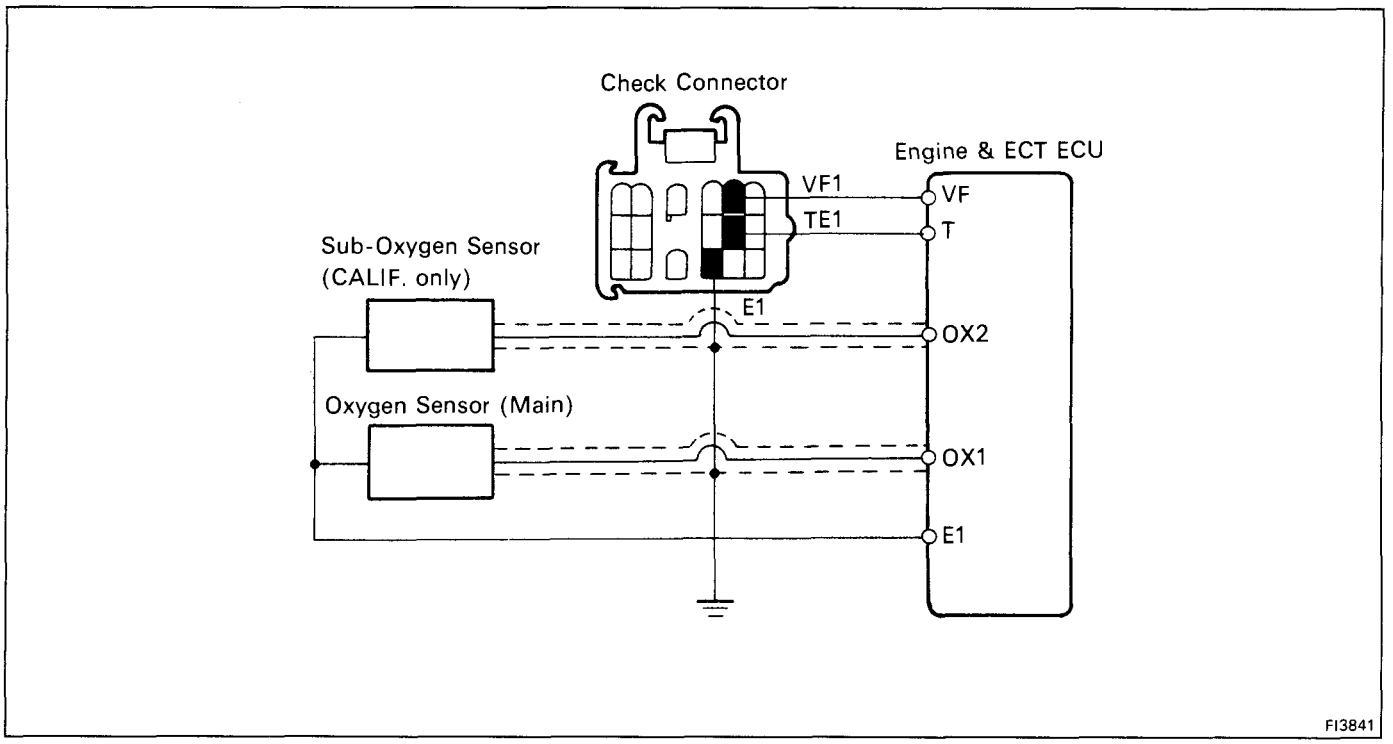

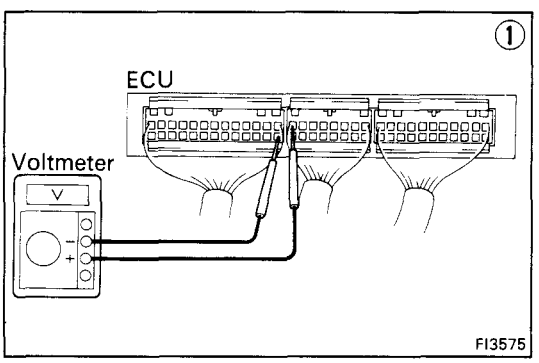

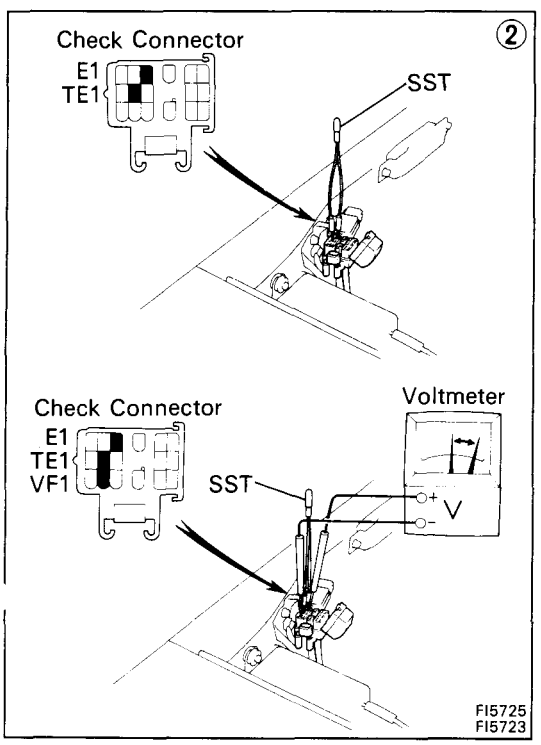

① There is no voltage between ECU terminal VF and E1.

Check that there is voltage between ECU terminal VF and body ground.

- OK → OK → Check wiring between ECU terminal E1 and body ground.
  - OK → Try another ECU. → Repair or replace.
  - BAD → Repair or replace.
- OK ↓

Is air leaking into air induction system? — BAD → Repair air leak.

OK ↓

Check spark plugs. (See page IG-11) — BAD → Repair or replace.

OK ↓

Check distributor and ignition system. (See page IG-4) — BAD → Repair or replace.

OK ↓

Check fuel pressure.(See page FI-87) — BAD → Repair or replace.

OK ↓

Check injections. (See page FI-120) — BAD → Repair or replace.

OK ↓

• Check cold start injector. (See page FI-102) — BAD → Repair or replace.

OK ↓

Check vacuum sensor (See page FI-131) — BAD → Repair or replace.

OK ↓

② Check operation of oxygen sensor(s). (See pages FI-173 and 175) — BAD → System normal

BAD ↓

Check wiring between oxygen sensor(s) and ECU. — BAD → Repair wiring.

OK ↓

Replace oxygen sensor(s).

• Rich malfunction only

CALIF. only

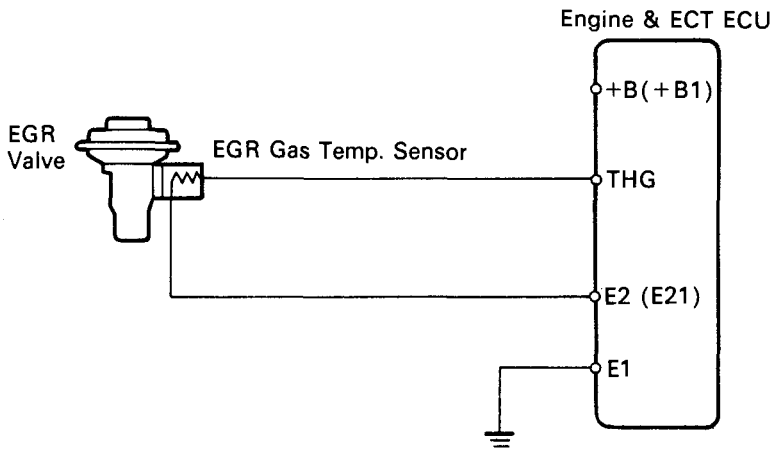

FI2680

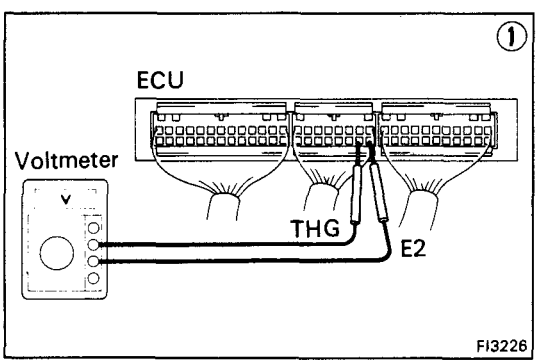

FI3226

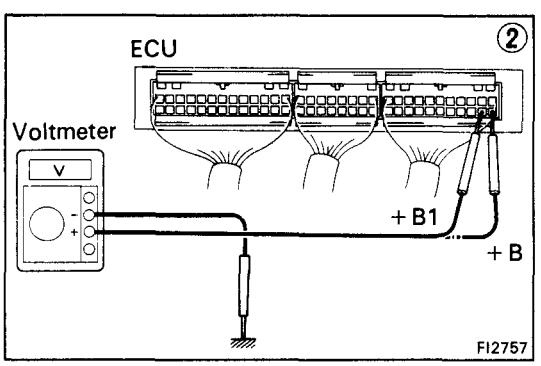

FI2757

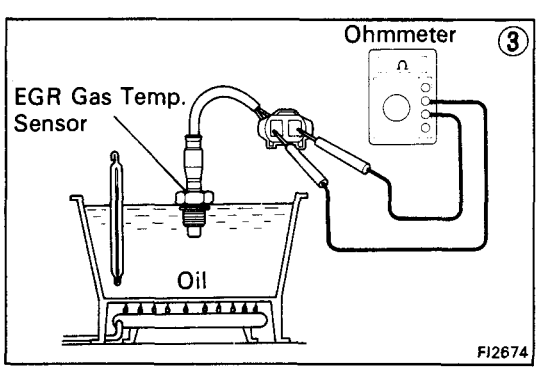

FI2674

① There is no voltage between ECU terminals THG and E2. **(IG SW ON)**

② Check that there is voltage between ECU terminal +B or +B1 and body ground. **(IG SW ON)**

- OK → Check wiring between ECU terminal E1 and body ground.
- NO → Refer to No.1. (See page FI-70)

Check wiring between ECU terminal E1 and body ground.

- OK → Check EGR system. (See page EC-24)
- BAD → Repair or replace.

Check EGR system. (See page EC-24)

- BAD → Repair or replace.
- OK → ③ Check EGR gas temp. sensor. (See page FI-172)

③ Check EGR gas temp. sensor. (See page FI-172)

- BAD → Replace EGR gas temp. sensor.
- OK → Check wiring between ECU and EGR gas temp. sensor.

Check wiring between ECU and EGR gas temp. sensor.

- OK → Try another ECU.
- BAD → Repair or replace.

FUEL SYSTEM

Fuel Pump

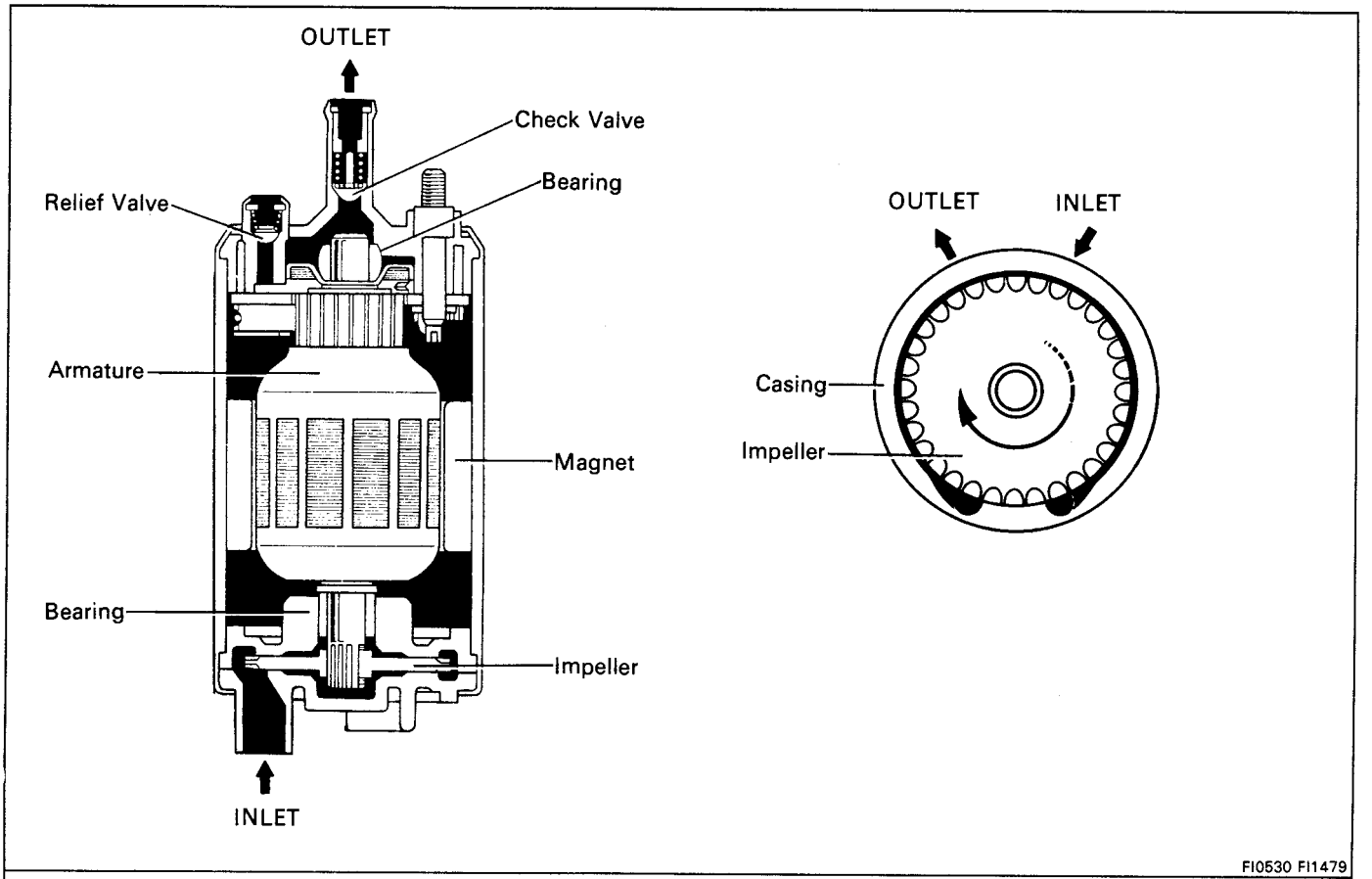

3S-GTE

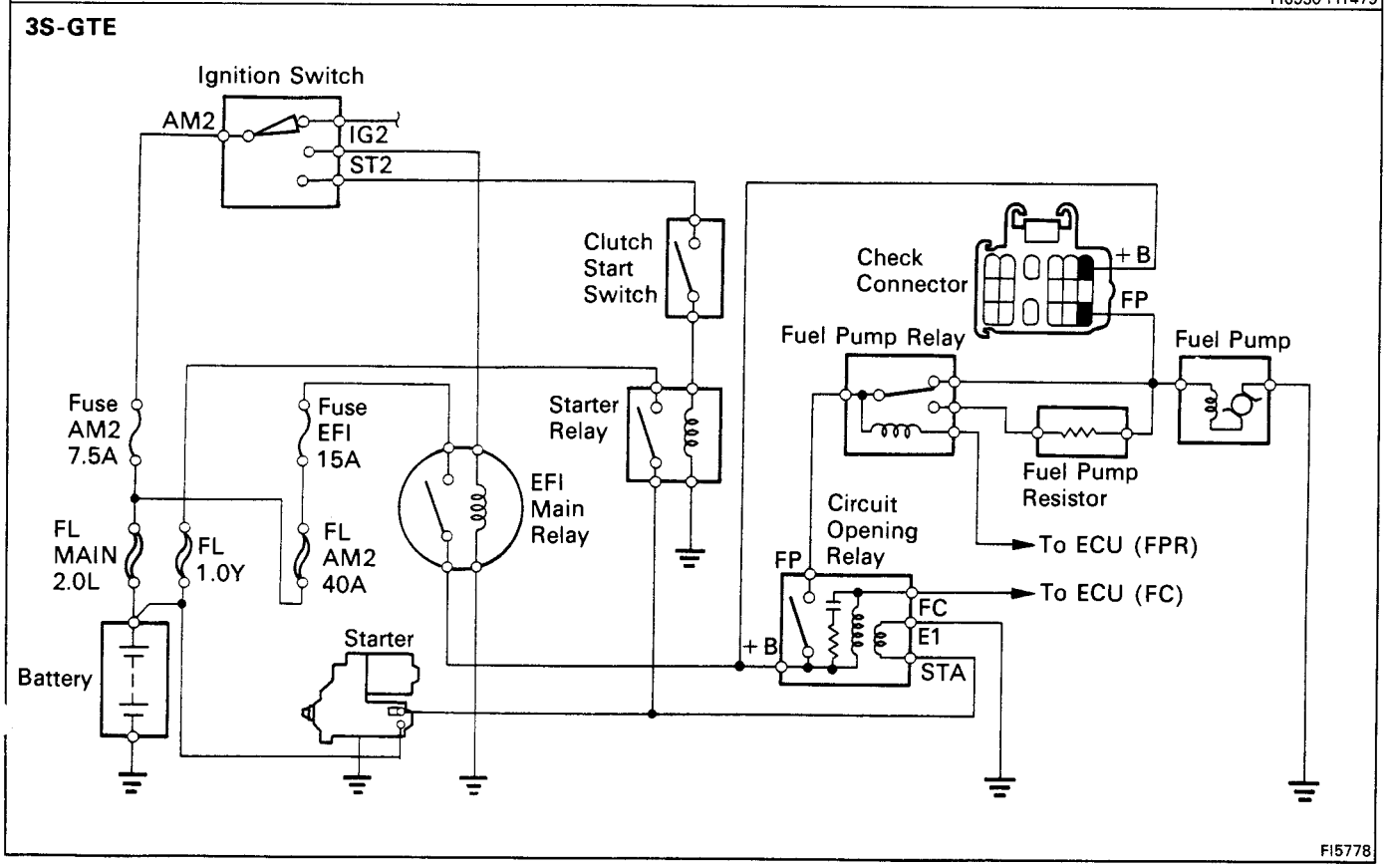

5S-FE

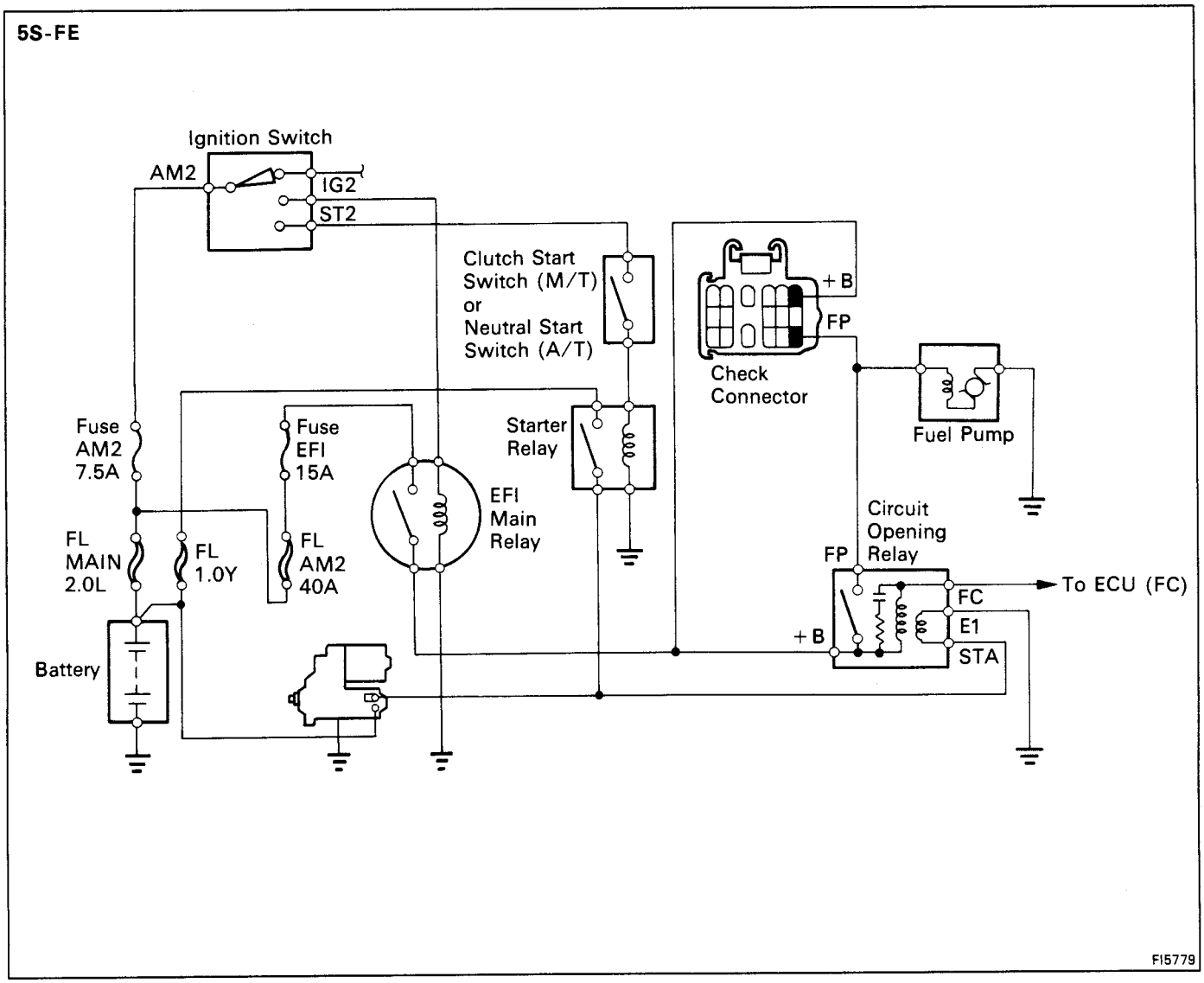
Ignition Switch
AM2
IG2
ST2
Clutch Start Switch (M/T) or Neutral Start Switch (A/T)
+B
FP
Check Connector
Fuel Pump
Fuse AM2 7.5A
Fuse EFI 15A
Starter Relay
EFI Main Relay
Circuit Opening Relay
FP
FL MAIN 2.0L
FL 1.0Y
FL AM2 40A
To ECU (FC)
FC
E1
STA
+B
Battery
FI5779

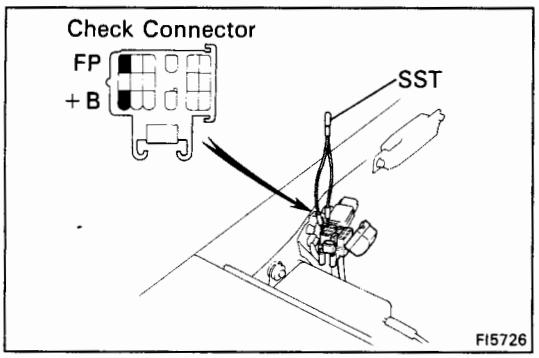

ON-VEHICLE INSPECTION

1. **CHECK FUEL PUMP OPERATION**

(a) Using SST, connect terminals +B and FP of the check connector.

SST 09843-18020

(b) Turn the ignition switch ON.

NOTICE: Do not start the engine.

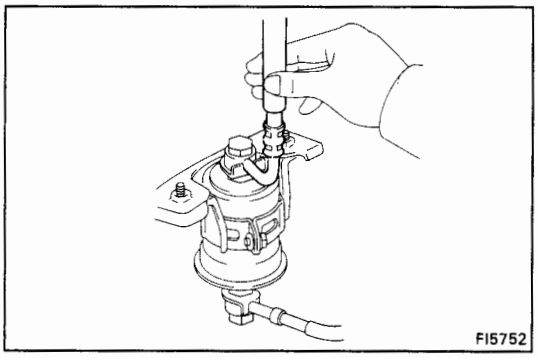

(c) Check that there is pressure in the hose from the fuel filter.

HINT: At this time, you will hear fuel return noise.

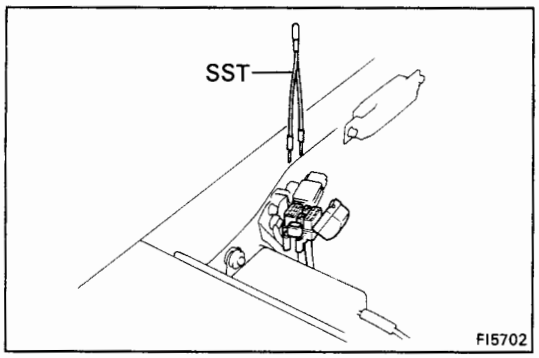

(d) Turn the ignition switch OFF.

(e) Remove SST.

SST 09843-18020

If there is no pressure, check the following parts:

- Fusible links
- Fuses (EFI 15A, AM2 7.5A, 1.0Y)
- EFI main relay
- Fuel pump
- Fuel pump relay (3S-GTE)
- Fuel pump resistor (3S-GTE)
- ECU
- Wiring connections

2. **(3S-GTE)**
CHECK FUEL PRESSURE

(a) Check the battery voltage above 12 volts.

(b) Disconnect the cable from the negative (–) terminal of the battery.

CAUTION: Work must be started after approx. 20 seconds or longer from the time the ignition switch is turned to the "LOCK" position and the negative (–) terminal cable is disconnected from the battery.

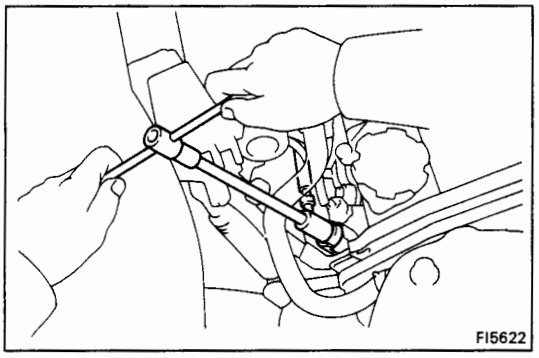

(c) Remove the union bolt and two gaskets, and disconnect the fuel inlet hose from the delivery pipe.

HINT:
- Put a suitable container or shop towel under the cold start injector pipe.
- Slowly loosen the union bolt.

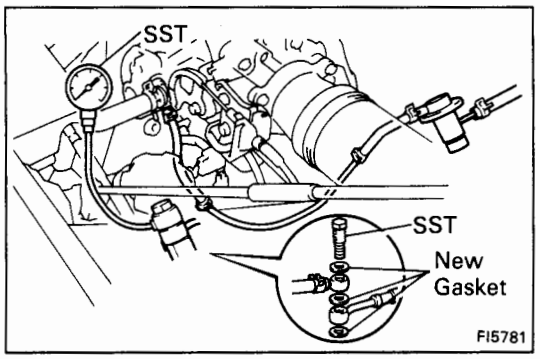

(d) Install SST (pressure gauge) to the delivery pipe with two new gaskets and the union bolt.

SST 09268-45012

Torque: 300 kg-cm (22 ft-lb, 29 N·m)

(e) Wipe off any splattered gasoline.

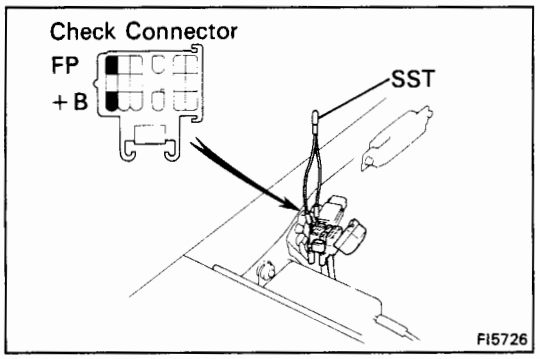

(f) Using SST, connect terminals +B and FP of the check connector.

SST 09843-18020

(g) Reconnect the battery negative (–) cable.

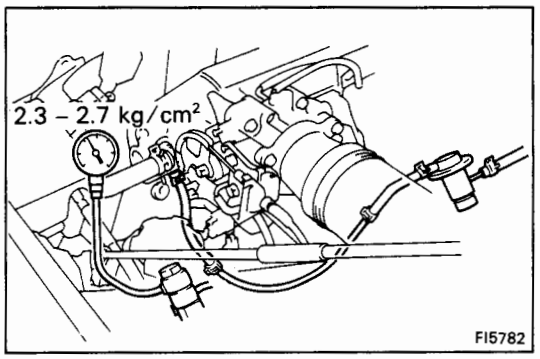

(h) Turn the ignition switch ON.

(i) Measure the fuel pressure.

Fuel pressure: 2.3 – 2.7 kg/cm²
(33 – 38 psi, 226 – 265 kPa)

If pressure is high, replace the fuel pressure regulator.

If pressure is low, check the following parts:

- Fuel hoses and connections
- Fuel pump
- Fuel filter
- Fuel pressure regulator

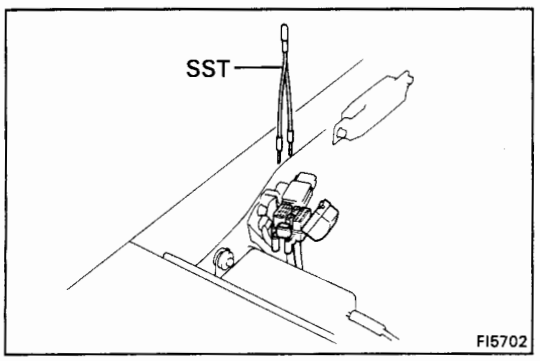

(j) Remove SST.

SST 09843-18020

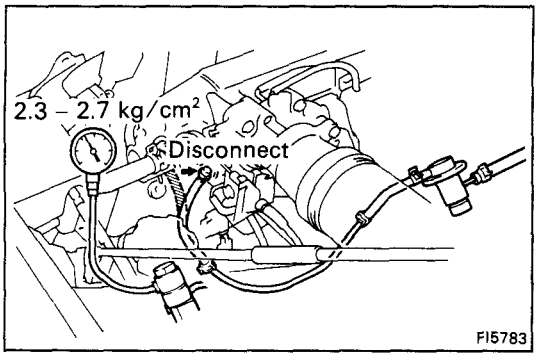

(k) Start the engine.

(l) Disconnect the vacuum sensing hose from the fuel pressure regulator, and plug the hose end.

(m) Measure the fuel pressure at idling.

Fuel pressure: 2.3 – 2.7 kg/cm²
(33 – 38 psi, 226 – 265 kPa)

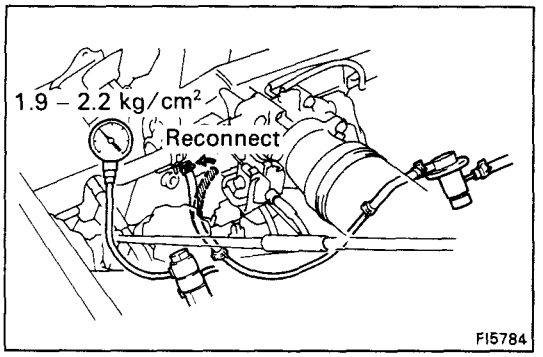

(n) Reconnect the vacuum sensing hose to the fuel pressure regulator and plug the hose end.

(o) Measure the fuel pressure at idling.

Fuel pressure: 1.9 – 2.2 kg/cm²
(27 – 31 psi, 186 – 216 kPa)

If pressure is not as specified, check the vacuum sensing hose and fuel pressure regulator.

(p) Stop the engine. Check that the fuel pressure remains 1.5 kg/cm² (21 psi, 147 kPa) or more for 5 minutes after the engine is turned off.

If pressure is not as specified, check the fuel pump, pressure regulator1and/or injector.

(q) After checking fuel pressure, disconnect the battery negative (–) cable and carefully remove the SST to prevent gasoline from splashing.

SST 09268-45012

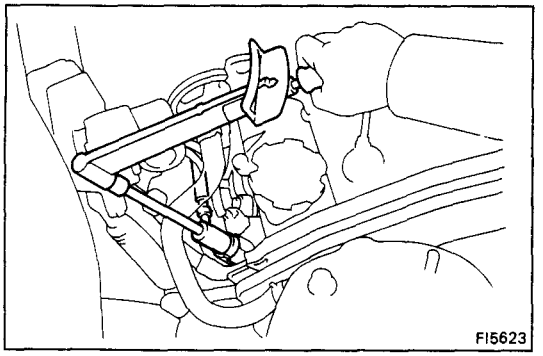

(r) Reconnect the fuel inlet hose with two new gaskets and the union bolt.

Torque: 300 kg-cm (22 ft-lb, 29 N·m)

(s) Reconnect the cable to the negative (–) terminal of the battery.

(t) Check for fuel leakage. (See page FI-9)

3. **(5S-FE)**
CHECK FUEL PRESSURE

(a) Check the battery voltage above 12 volts.

(b) Disconnect the cable from the negative (–) terminal of the battery.

CAUTION: Work must be started after approx. 20 seconds or longer from the time the ignition switch is turned to the "LOCK" position and the negative (–) terminal cable is disconnected from the battery.

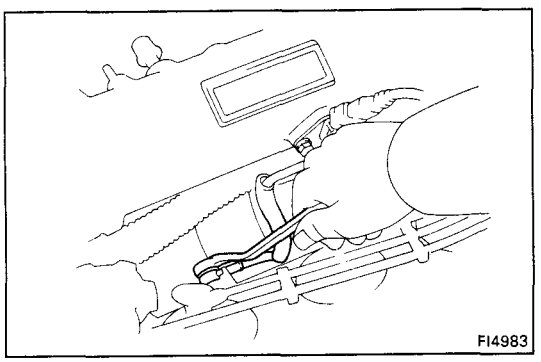

(c) Remove the union bolt and two gaskets, and disconnect the cold start injector pipe from the delivery pipe.

HINT:
- Put a suitable container or shop towel under the cold start injector pipe.
- Slowly loosen the union bolt.

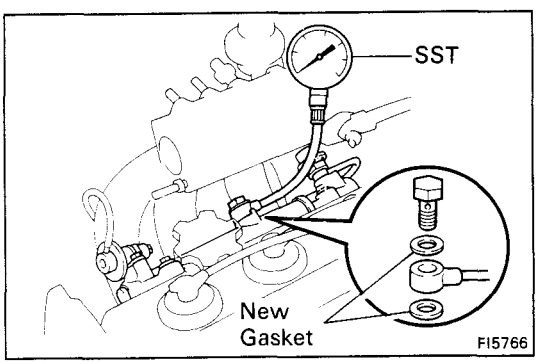

(d) Install SST (pressure gauge) to the delivery pipe with two new gaskets and the union bolt.

SST 09268-45012

Torque: 180 kg-cm (13 ft-lb, 18 N·m)

(e) Wipe off any splattered gasoline.

(f) Disconnect the cold start injector connector.

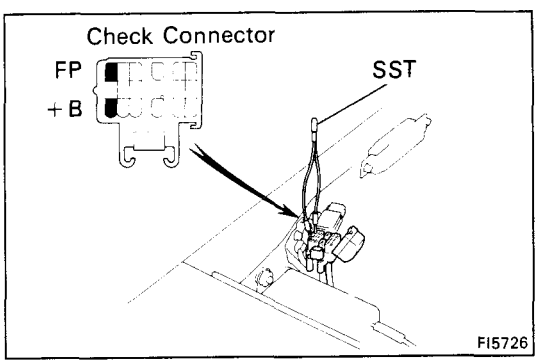

(g) Using SST, connect terminals +B and FP of the check connector.

SST 09843-18020

(h) Reconnect the battery negative (–) cable.

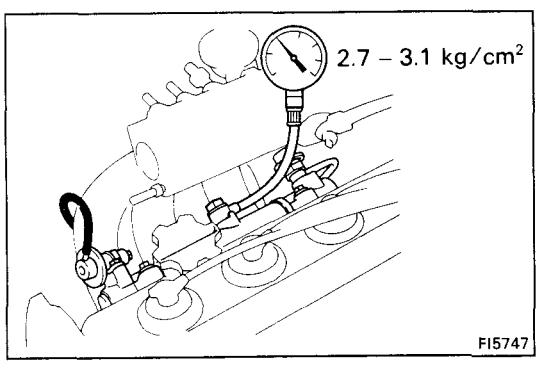

(i) Turn the ignition switch ON.

(j) Measure the fuel pressure.

Fuel pressure: 2.7 – 3.1 kg/cm²
(38 – 44 psi, 265 – 304 kPa)

If pressure is high, replace the fuel pressure regulator.

If pressure is low, check the following parts:

- Fuel hoses and connections
- Fuel pump
- Fuel filter
- Fuel pressure regulator

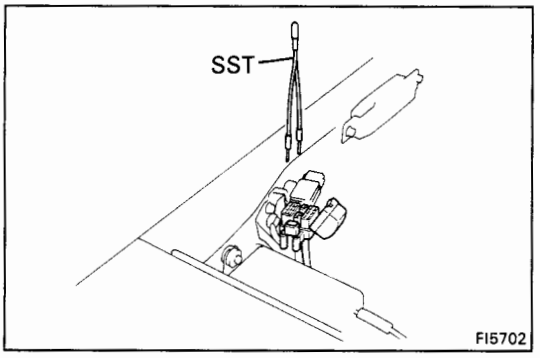

(k) Remove SST.

SST 09843-18020

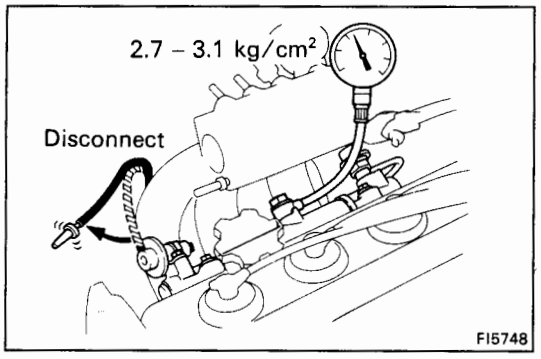

(l) Start the engine.

(m) Disconnect the vacuum sensing hose from the fuel pressure regulator.

(n) Measure the fuel pressure at idling.

Fuel pressure: 2.7 – 3.1 kg/cm²
(38 – 44 psi, 265 – 304 kPa)

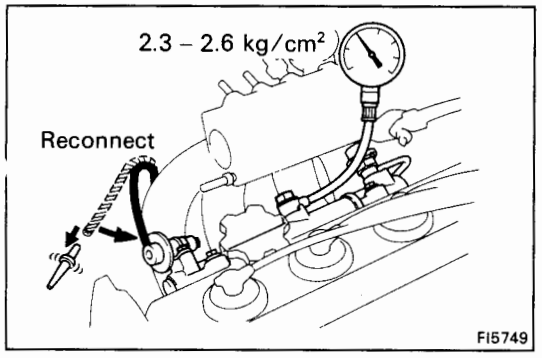

(o) Reconnect the vacuum sensing hose to the fuel pressure regulator and plug the hose end.

(p) Measure the fuel pressure at idling.

Fuel pressure: 2.3 – 2.6 kg/cm²
(33 – 37 psi, 226 – 255 kPa)

If pressure is not as specified, check the vacuum sensing hose and fuel pressure regulator.

(q) Stop the engine. Check that the fuel pressure remains 1.5 kg/cm² (21 psi, 147 kPa) or more for 5 minutes after the engine is turned off.

If pressure is not as specified, check the fuel pump, pressure regulator and/or injector.

(r) After checking fuel pressure, disconnect the battery negative (–) cable and carefully remove the SST to prevent gasoline from splashing.

SST 09268-45012

(s) Reconnect the cold start injector connector.

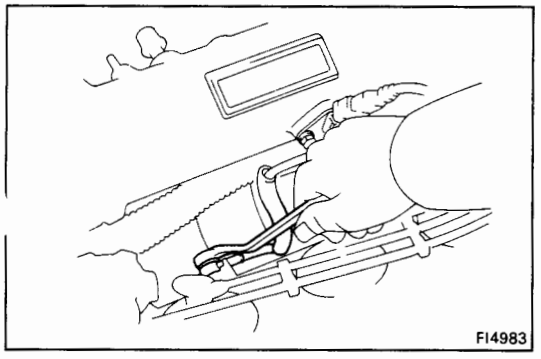

(t) Connect the cold start injector pipe with two new gaskets and the union bolt.

Torque: 180 kg-cm (13 ft-lb, 18 N·m)

(u) Reconnect the cable to the negative (–) terminal of the battery.

(v) Check for fuel leakage. (See page FI-9)

REMOVAL OF FUEL PUMP

CAUTION: Do not smoke or work near an open flame when working on the fuel pump.

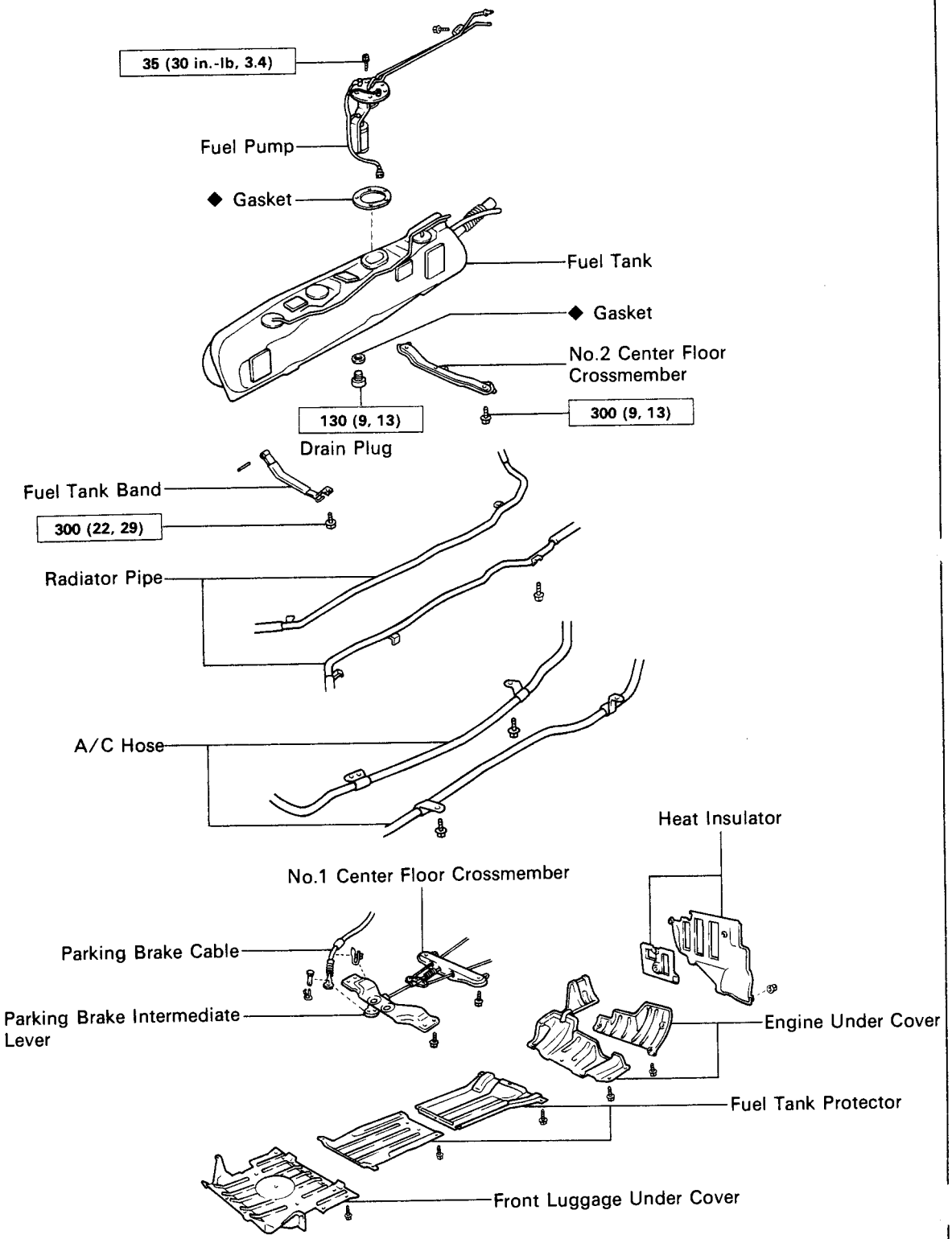

kg-cm (ft-lb, N·m) : Specified Torque

◆ Non-reusable part

FI5801

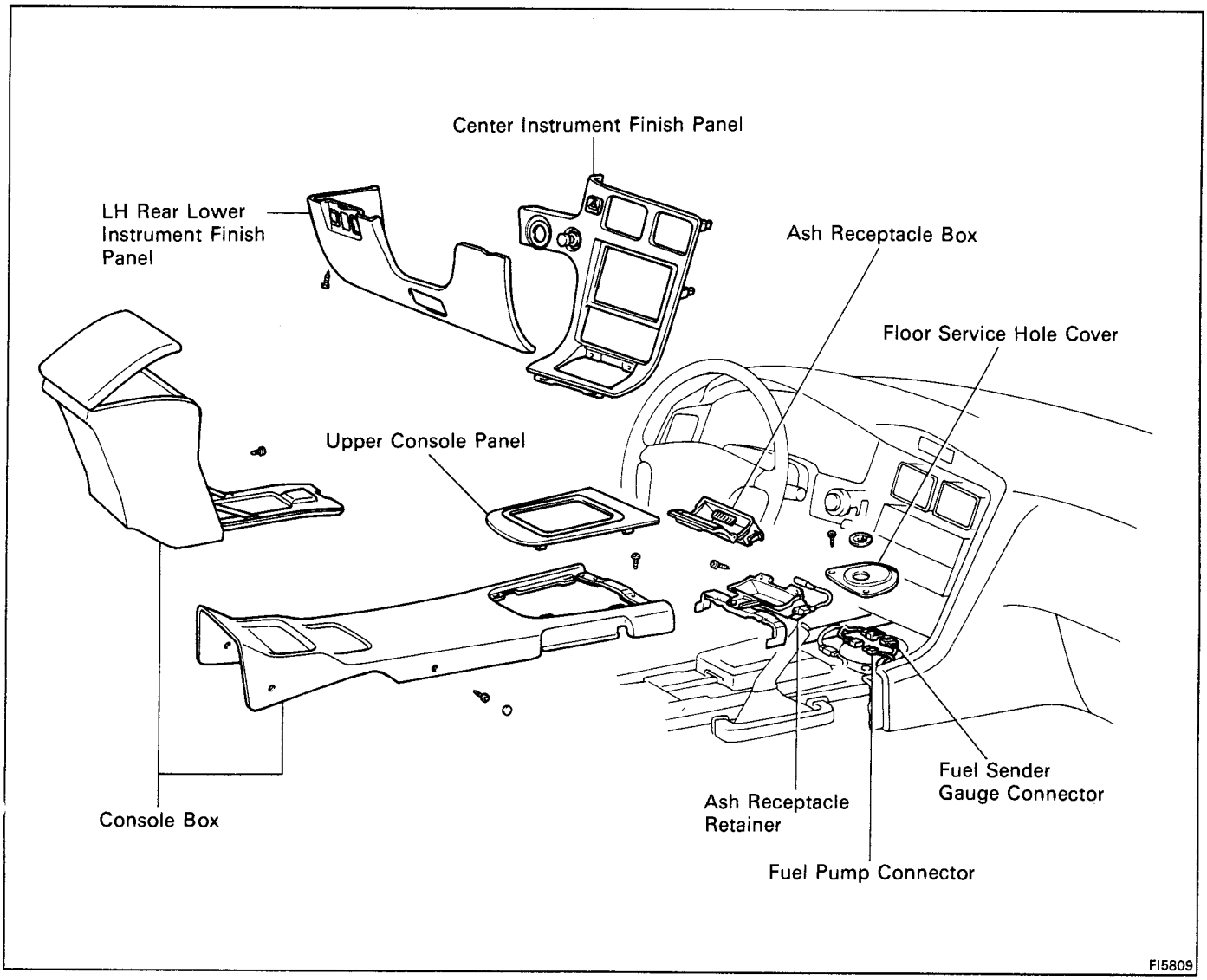

1. **DISCONNECT CABLE FROM NEGATIVE TERMINAL OF BATTERY**

   CAUTION: Work must be started after approx. 20 seconds or longer from the time the ignition switch is turned to the "LOCK" position and the negative (–) terminal cable is disconnected from the battery.

2. **DISCONNECT FUEL PUMP CONNECTOR AND FUEL SENDER GAUGE CONNECTOR**

   (a) Remove the following parts:
   - Console boxes
   - LH lower instrument finish panel
   - Center instrument finish panel
   - Ash receptacle box
   - Ash receptacle retainer

   (b) Disconnect the fuel pump connector and fuel sender gauge connector.

   (c) Remove the two screws and floor service hole cover.

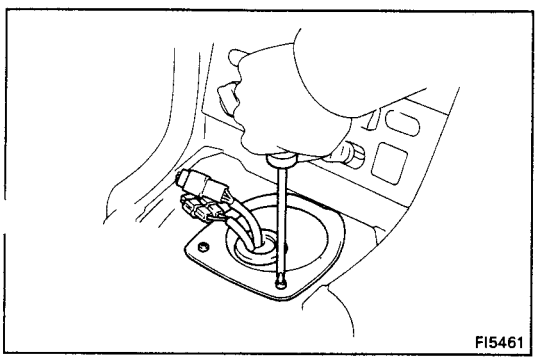

3. **REMOVE ENGINE UNDER COVERS**

4. **REMOVE FRONT LUGGAGE UNDER COVER**

5. **REMOVE FUEL TANK PROTECTORS**

6. **DRAIN FUEL**

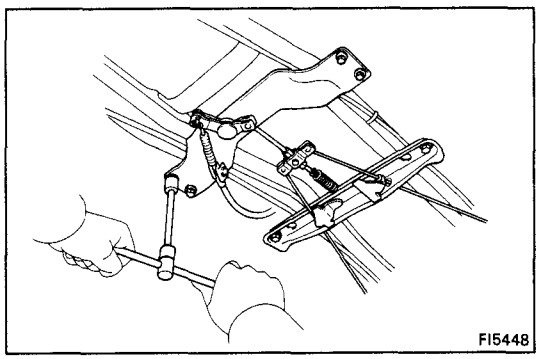

7. **REMOVE PARKING BRAKE INTERMEDIATE LEVER AND NO.1 CENTER FLOOR CROSSMEMBER**
   (a) Remove the four bolts and intermediate lever.
   (b) Remove the two bolts and crossmember.
   (c) Disconnect the parking brake cable from the intermediate lever.

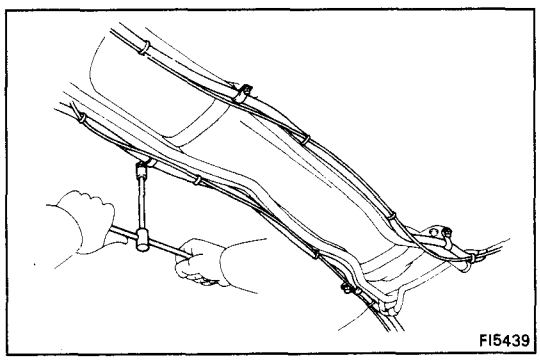

8. **DISCONNECT A/C HOSES FROM BODY**
   Remove the four bolts, and disconnect the two A/C hoses from the body.

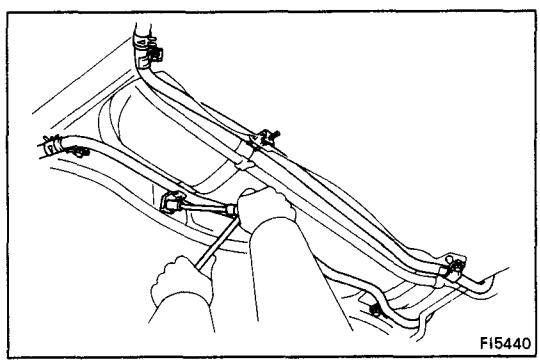

9. **DISCONNECT RADIATOR PIPES FROM BODY**
   Remove the six bolts, and disconnect the two radiator pipes from the body.

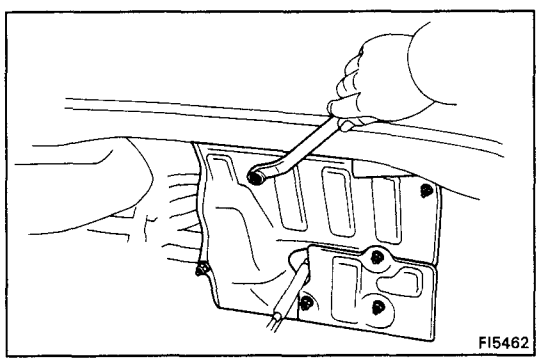

10. **REMOVE FUEL TANK HEAT INSULATORS**
    Remove the six nuts and two heat insulators.

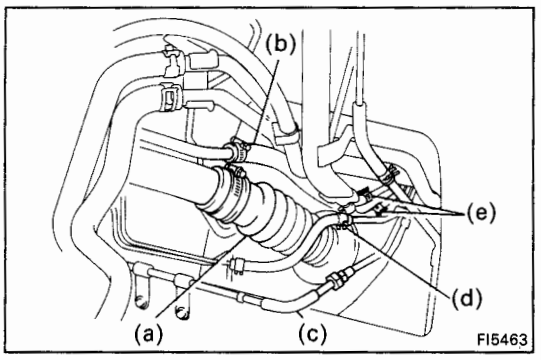

11. DISCONNECT FUEL HOSES AND TUBE

CAUTION: Remove the fuel filter cap to prevent the fuel from flowing out.

(a) Fuel inlet hose
(b) Fuel breather hose
(c) Fuel pump tube
(d) Fuel return hose
(e) Two fuel evaporative bent hoses

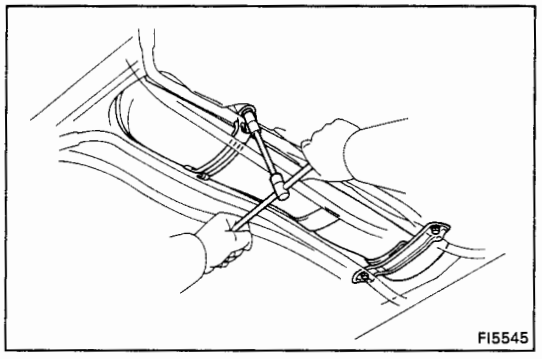

12. REMOVE FUEL TANK

(a) Remove the bolt, pin and tank band.
(b) Remove the two bolts and No.2 center floor cross-member.
(c) Remove the fuel tank.

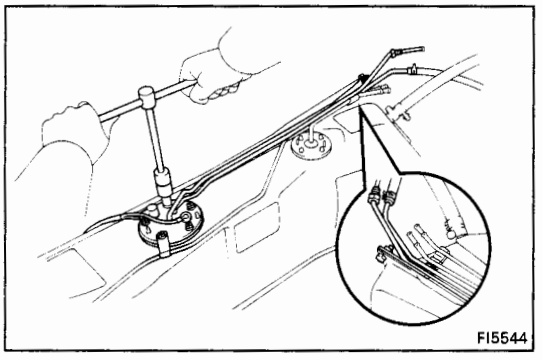

13. REMOVE FUEL PUMP FROM FUEL TANK

(a) Remove the bolt holding the fuel pump tube to the fuel tank.
(b) Remove the five bolts, and pull out the pump.
(c) Remove the gasket from the pump bracket.

COMPONENTS

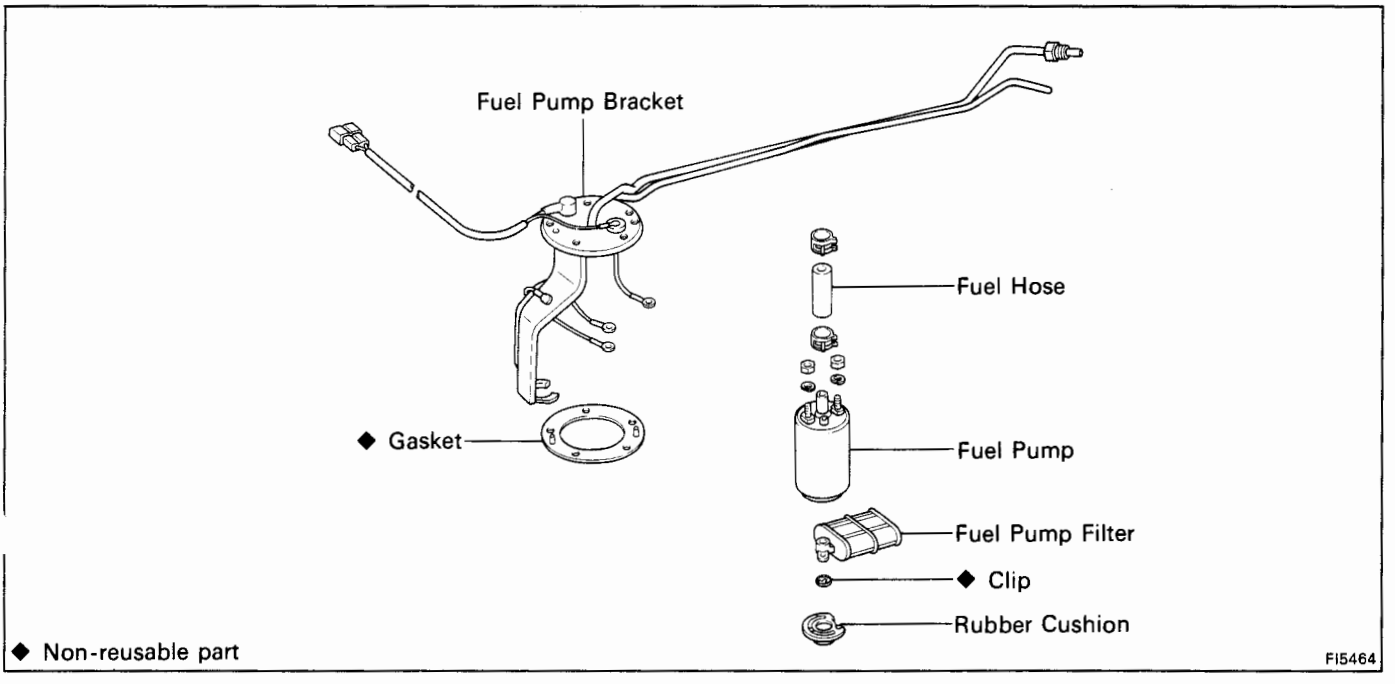

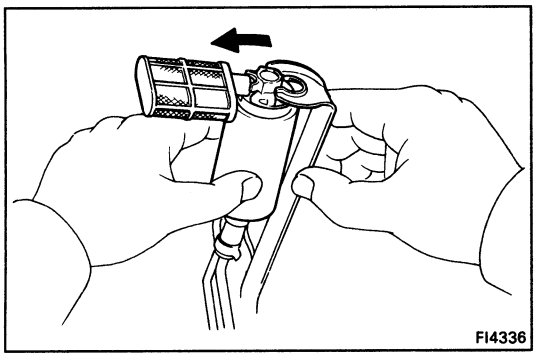

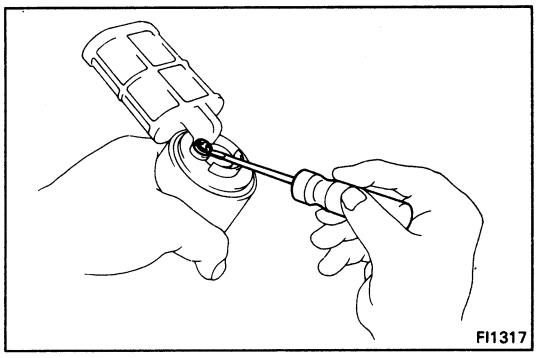

DISASSEMBLY OF FUEL PUMP

(See page FI-95)

1. **REMOVE FUEL PUMP FROM FUEL PUMP BRACKET**
   (a) Pull out the lower side of the fuel pump from the pump bracket.
   (b) Remove the rubber cushion from the fuel pump.
   (c) Remove the nut and spring washers, and disconnect the lead wire from the fuel pump. Disconnect the three lead wires.
   (d) Disconnect the fuel hose from the fuel pump, and remove the fuel pump.
2. **REMOVE FUEL PUMP FILTER FROM FUEL PUMP**
   (a) Using a small screwdriver, remove the clip.
   (b) Pull out the pump filter.

ASSEMBLY OF FUEL PUMP

(See page FI-95)

1. **INSTALL FUEL PUMP FILTER TO FUEL PUMP**
   Install the pump filter with a new clip.
2. **INSTALL FUEL PUMP TO FUEL PUMP BRACKET**
   (a) Connect the fuel hose to the outlet port of the fuel pump.
   (b) Connect the lead wire to the fuel pump with the spring washer and nut. Connect the three lead wires
   (c) Install the rubber cushion to the fuel pump.
   (d) Install the fuel pump by pushing the lower side of the fuel pump.

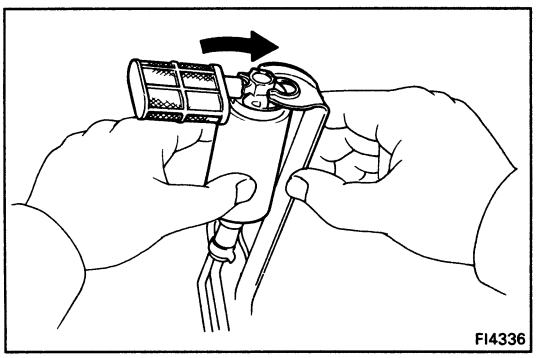

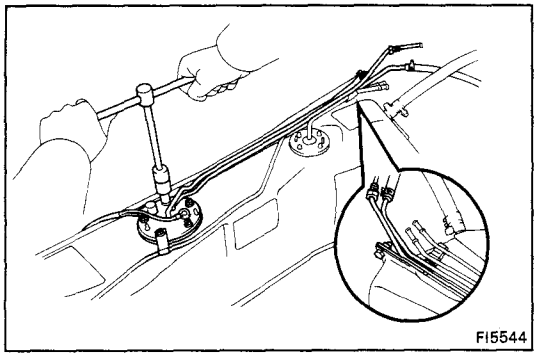

INSTALLATION OF FUEL PUMP

(See pages FI-92 and 93)

1. INSTALL FUEL PUMP TO FUEL TANK

(a) Install a new gasket to the pump bracket.

(b) Insert the fuel pump bracket into the fuel tank.

(c) Install the five bolts holding the fuel pump bracket to the fuel tank.

Torque: 35 kg-cm (35 in.-lb, 3.4 N·m)

(d) Install the bolt holding the fuel pump tube to the fuel tank.

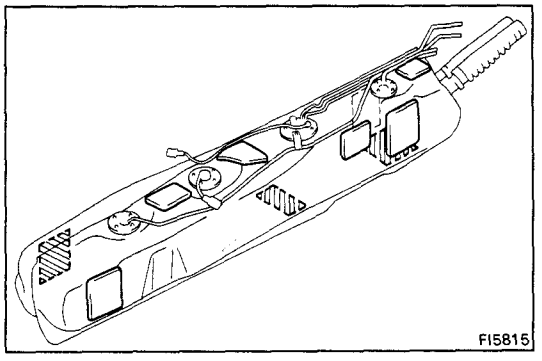

2. INSTALL FUEL TANK

(a) Apply soapy water to the cushions on the fuel tank.

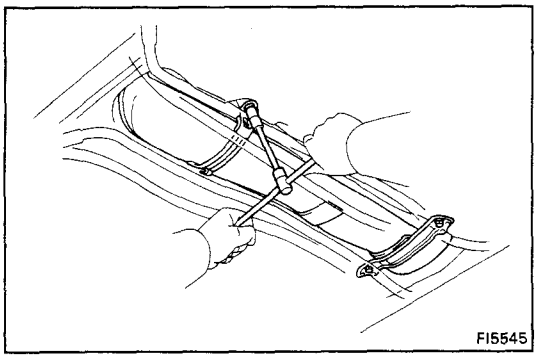

(b) Attach the fuel tank to the body.

(c) Install the fuel tank band with the pin and bolt.

Torque: 300 kg-cm (22 ft-lb, 29 N·m)

(d) Install the No.2 center floor crossmember with the two bolts.

Torque: 300 kg-cm (22 ft-lb, 29 N·m)

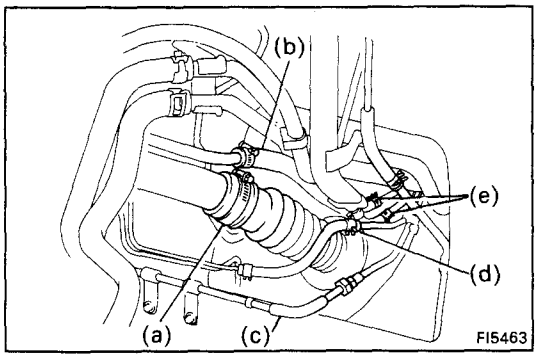

3. CONNECT FUEL HOSES AND TUBE

(a) Fuel inlet hose

(b) Fuel breather hose

(c) Fuel pump tube

(d) Fuel return hose

(e) Two fuel evaporative bent hoses

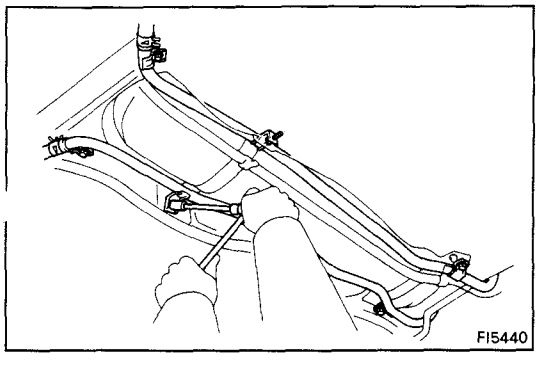

4. INSTALL RADIATOR PIPES TO BODY

Install the two radiator pipes with the six bolts.

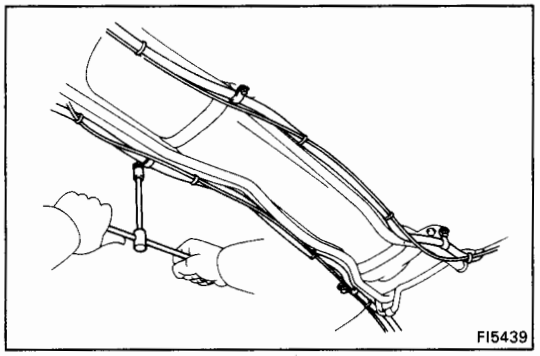

5. INSTALL A/C HOSES TO BODY

Install the two A/C hoses with the four bolts.

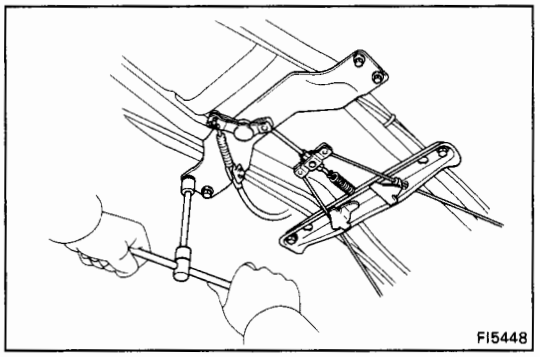

6. INSTALL PARKING BRAKE INTERMEDIATE LEVER AND NO.1 CENTER FLOOR CROSSMEMBER

(a) Connect the parking brake cable to the intermediate lever.

(b) Install the intermediate lever with the four bolts.

(c) Install the crossmember with the two bolts.

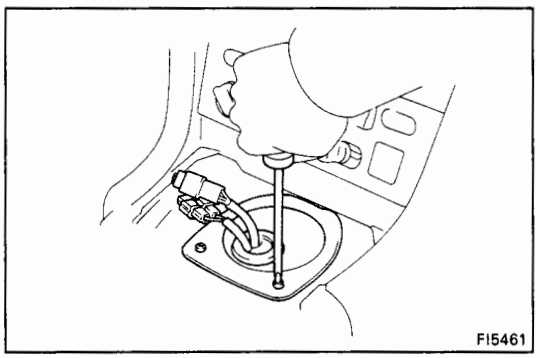

7. CONNECT FUEL PUMP CONNECTOR AND FUEL SENDER GAUGE CONNECTOR

(a) Install the floor service hole cover with the two screws.

(b) Connect the fuel pump connector and fuel sender gauge connector.

(c) Install the following parts:

- Ash receptacle retainer
- Ash receptacle box
- Center instrument finish panel
- LH rear lower instrument finish panel
- Console boxes

8. FILL WITH FUEL

9. CHECK FOR FUEL LEAKAGE (See page FI-9)

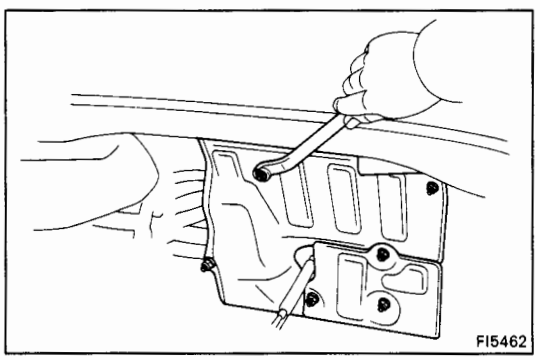

10. INSTALL FUEL TANK HEAT INSULATORS

Remove the six nuts and two heat insulators.

11. INSTALL ENGINE UNDER COVERS

12. INSTALL FUEL TANK PROTECTORS

13. INSTALL FRONT LUGGAGE UNDER COVER

14. CONNECT CABLE TO NEGATIVE TERMINAL OF BATTERY

Cold Start Injector (3S-GTE)

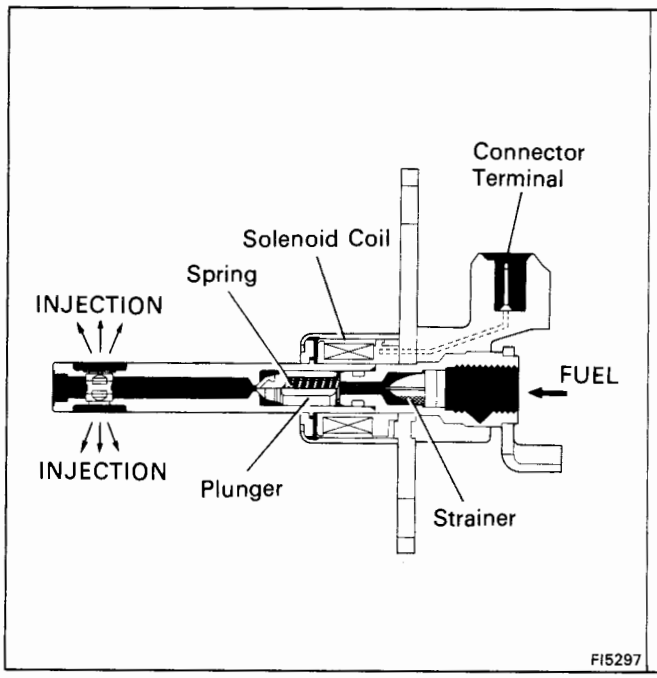

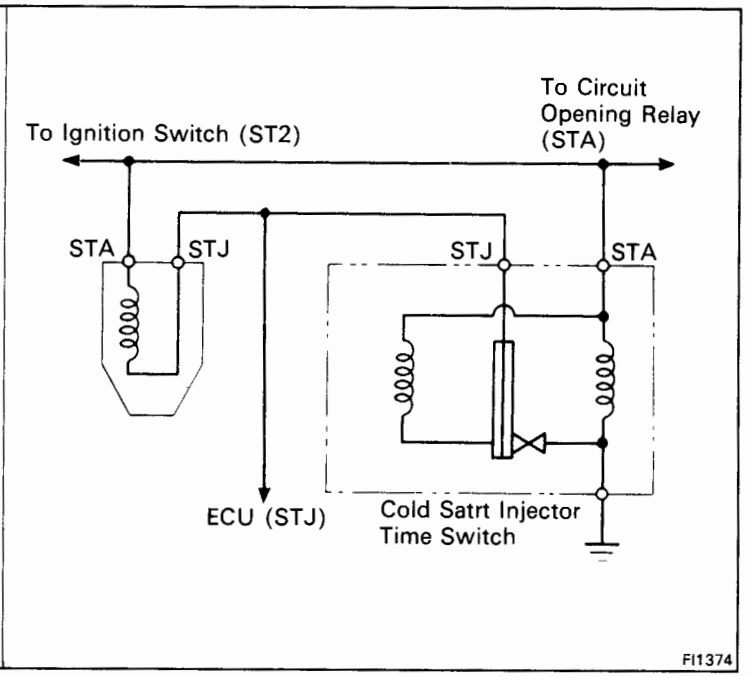

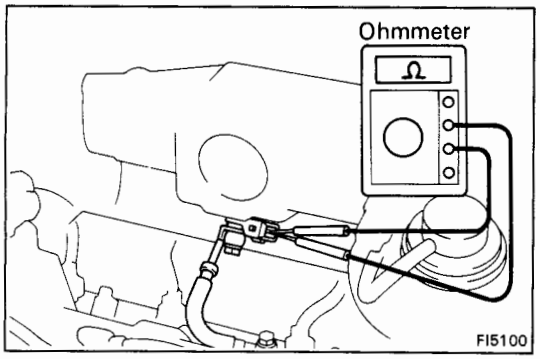

ON-VEHICLE INSPECTION

INSPECT RESISTANCE OF COLD START INJECTOR

(a) Remove the throttle body.
(See steps 1 to 8, 10 and 11 on pages FI-135 and 136)

(b) Disconnect the cold start injector connector.

(c) Using an ohmmeter, measure the resistance between the terminals.

Resistance: 2 – 4 Ω

If the resistance is not as specified, replace the cold start injector.

(d) Reconnect the cold start injector connector.

(e) Reinstall the throttle body.
(See steps 2, 3 and 5 to 12 on page FI-138 and 139)

REMOVAL OF COLD START INJECTOR

1. **REMOVE THROTTLE BODY**
(See steps 1 to 8, 10 and 11 on pages FI-135 and 136)

2. **DISCONNECT COLD START INJECTOR CONNECTOR**

3. **REMOVE COLD START INJECTOR PIPE**

Remove the two union bolts and four gaskets and injector pipe.

HINT:
- Put a suitable container or shop towel under the injector pipe.
- Slowly loosen the union bolt.

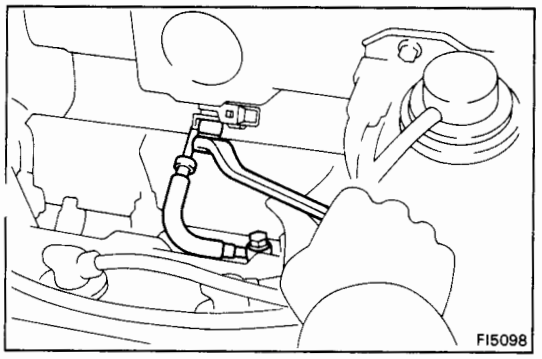

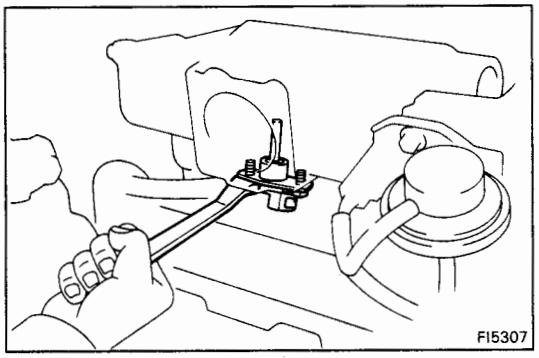

4. REMOVE COLD START INJECTOR

Remove the two bolts, cold start injector and gasket.

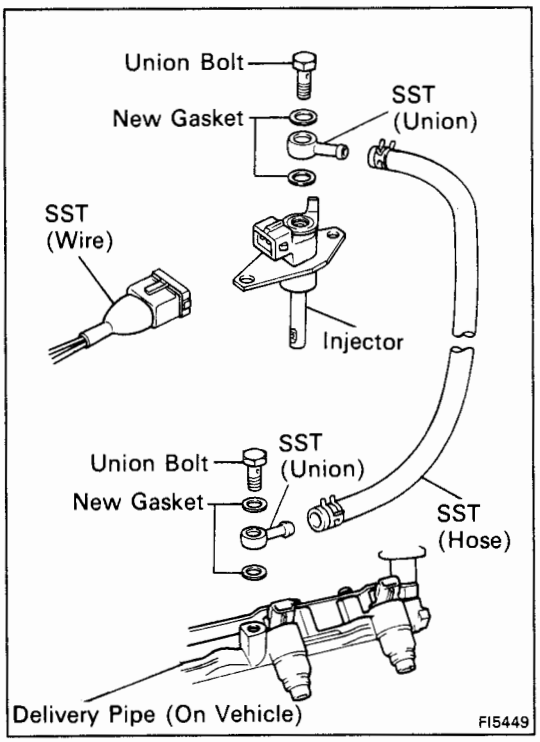

INSPECTION OF COLD START INJECTOR

1. INSPECT INJECTION OF COLD START INJECTOR

CAUTION: Keep injector clear of sparks during the test.

(a) Install SST (two unions) to the injector and delivery pipe with four new gaskets and the union bolts.

SST 09268-41045 (09268-41080)

(b) Connect SST (hose) to the unions.

SST 09268-41045

(c) Connect SST (wire) to the injector.

SST 09842-30050

(d) Put a container under the injector.

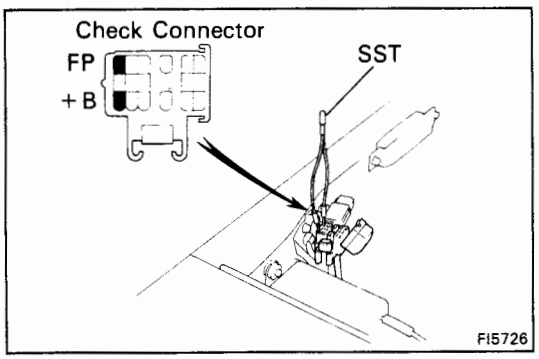

(e) Using SST, connect terminals +B and FP of the check connector.

SST 09843-18020

(f) Reconnect the battery negative (–) cable.

(g) Turn the ignition switch ON.

NOTICE: Do not start the engine.

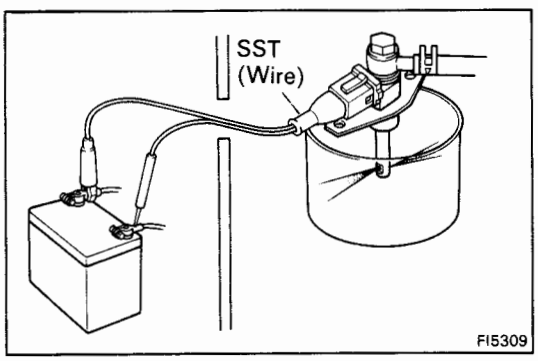

(h) Connect the test probes of the SST (wire) to the battery, and check that the fuel spray is as shown.

SST 09842-30050

NOTICE: Perform this check within the shortest possible time.

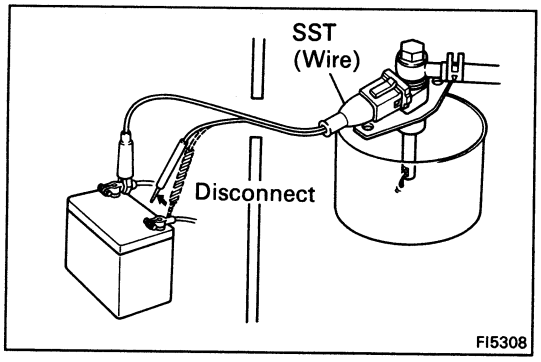

2. INSPECT LEAKAGE

(a) In the condition above, disconnect the test probes of SST (wire) from the battery and check for fuel leakage from the injector.

SST 09842-30050

Fuel drop: One drop or less per minute

(b) Disconnect the battery negative (–) cable.

(c) Remove SST.

SST 09268-41045, 09842-30050 and 09843-18020

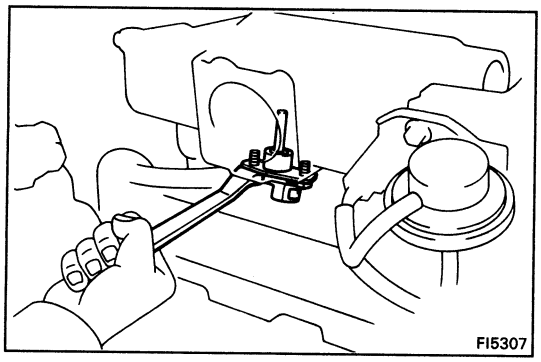

INSTALLATION OF COLD START INJECTOR

1. INSTALL COLD START INJECTOR

Install a new gasket and the injector with the two bolts.

Torque: 60 kg-cm (52 in.-lb, 5.9 N·m)

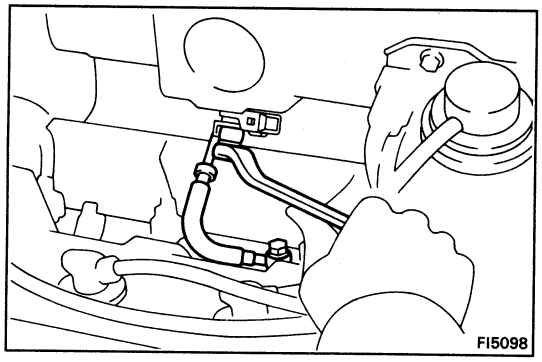

2. INSTALL COLD START INJECTOR PIPE

Install the injector pipe with four new gaskets and the two union bolts.

Torque: 180 kg-cm (13 ft-lb, 18 N·m)

3. CONNECT COLD START INJECTOR CONNECTOR

4. INSTALL THROTTLE BODY

(See steps 2, 3 and 5 to 12 on pages FI-138 and 139)

Cold Start Injector (5S-FE)

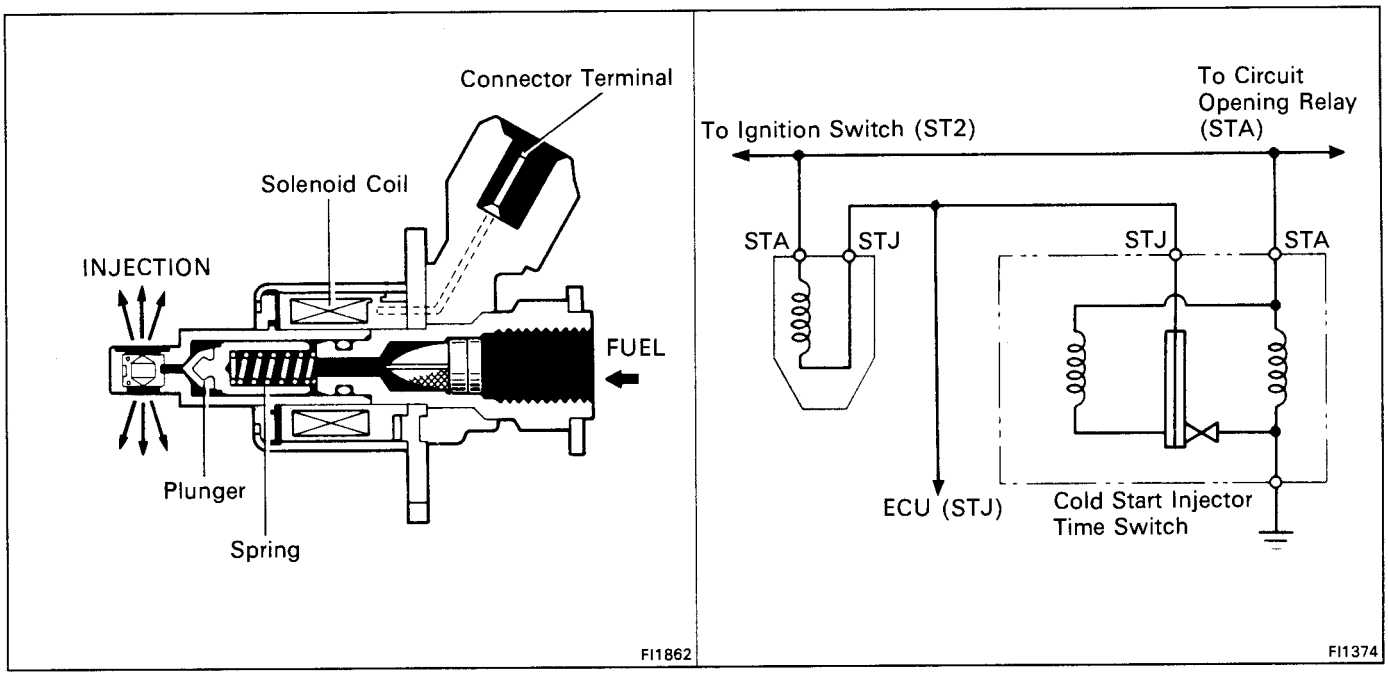

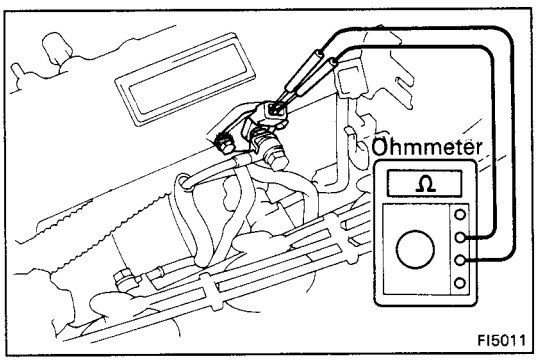

ON-VEHICLE INSPECTION

INSPECT RESISTANCE OF COLD START INJECTOR

(a) Disconnect the cold start injector connector.

(b) Using an ohmmeter, measure the resistance between the terminals.

Resistance: 2 – 4 Ω

If the resistance is not as specified, replace the cold start injector.

(c) Reconnect the cold start injector connector.

REMOVAL OF COLD START INJECTOR

1. **DISCONNECT CABLE FROM NEGATIVE TERMINAL OF BATTERY**

   CAUTION: Work must be started after approx. 20 seconds or longer from the time the ignition switch is turned to the "LOCK" position and the negative (–) terminal cable is disconnected from the battery.

2. **DISCONNECT COLD START INJECTOR CONNECTOR**

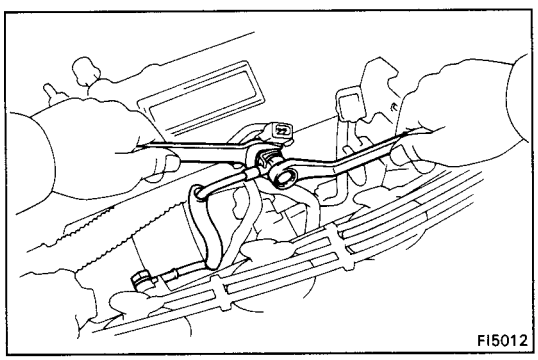

3. **REMOVE COLD START INJECTOR PIPE**

   Remove the two union bolts and four gaskets and injector pipe.

   HINT:
   - Put a suitable container or shop towel under the injector pipe.
   - Slowly loosen the union bolt.

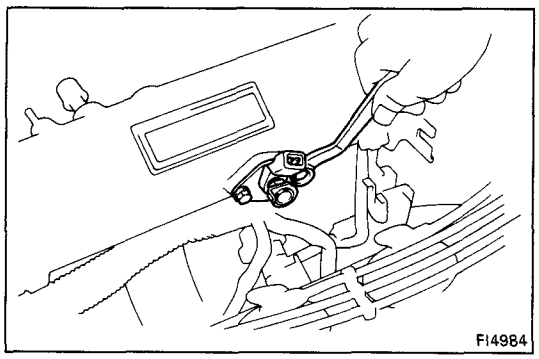

4. REMOVE COLD START INJECTOR

Remove the two bolts, cold start injector and gasket.

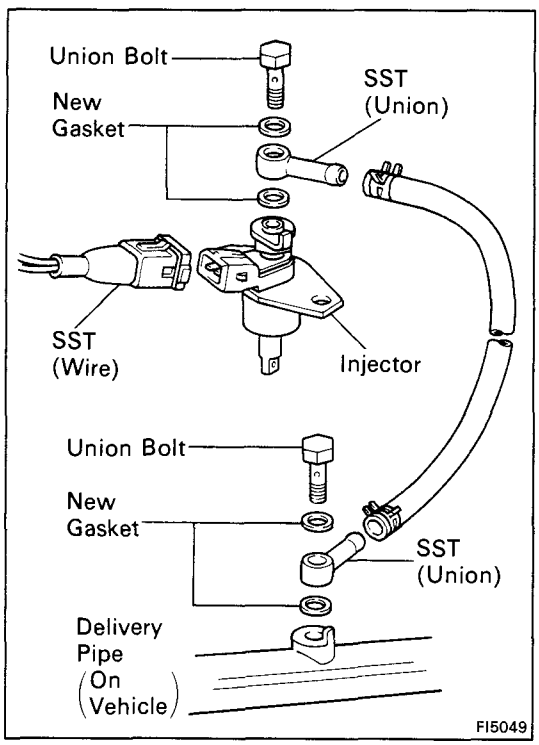

INSPECTION OF COLD START INJECTOR

1. INSPECT INJECTION OF COLD START INJECTOR

CAUTION: Keep clear of sparks during the test.

(a) Install SST (two unions) to the injector and delivery pipe with four new gaskets and the union bolts.

SST 09268-41045 (09268-41080)

(b) Connect SST (hose) to the unions.

SST 09268-41045

(c) Connect SST (wire) to the injector.

SST 09842-30050

(d) Put a container under the injector.

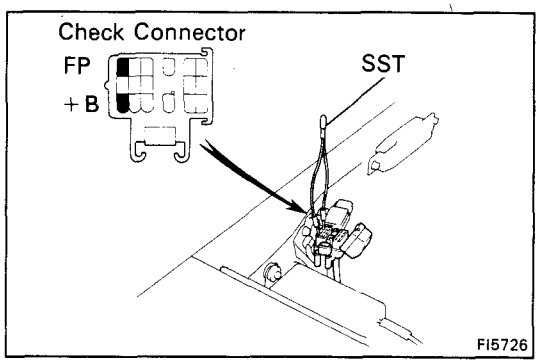

(e) Using SST, connect terminals +B and FP of the check connector.

SST 09843-18020

(f) Reconnect the battery negative (–) cable.

(g) Turn the ignition switch ON.

NOTICE: Do not start the engine.

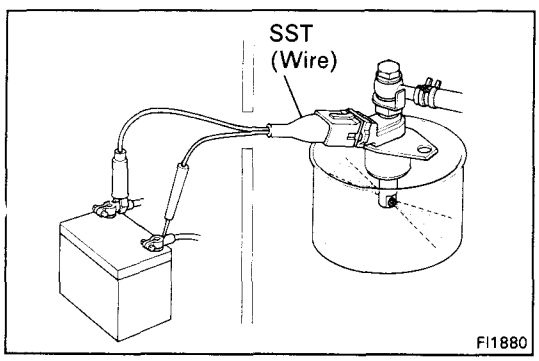

(h) Connect the test probes of the SST (wire) to the battery, and check that the fuel spray is as shown.

SST 09842-30050

NOTICE: Perform this check within the shortest possible time.

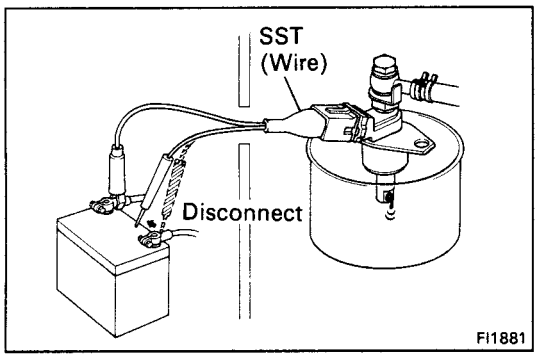

2. INSPECT LEAKAGE

(a) In the condition above, disconnect the test probes of SST (wire) from the battery and check fuel leakage from the injector.

SST 09842-30050

Fuel drop: One drop or less per minute

(b) Disconnect the battery negative (–) cable.

(c) Remove SST.

SST 09268-41045, 09842-30050 and 09843-18020

INSTALLATION OF COLD START INJECTOR

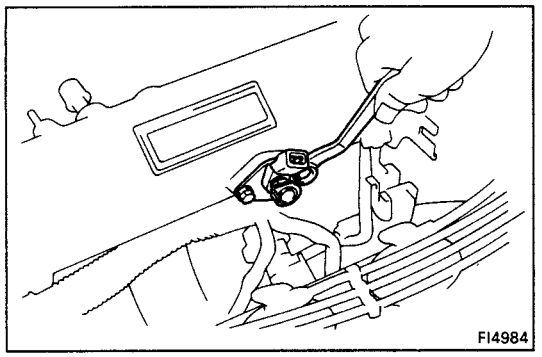

1. INSTALL COLD START INJECTOR

Install a new gasket and the injector with the two bolts.

Torque: 95 kg-cm (82 in.-lb, 9.3 N·m)

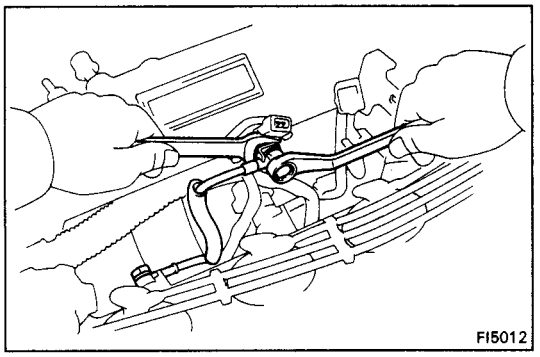

2. INSTALL COLD START INJECTOR PIPE

Install the injector pipe with four new gaskets and the two union bolts.

Torque: 180 kg-cm (13 ft-lb, 18 N·m)

3. CONNECT COLD START INJECTOR CONNECTOR

4. CONNECT CABLE TO NEGATIVE TERMINAL OF BATTERY

5. CHECK FOR FUEL LEAKAGE (See page FI-9)

Fuel Pressure Regulator (3S-GTE)

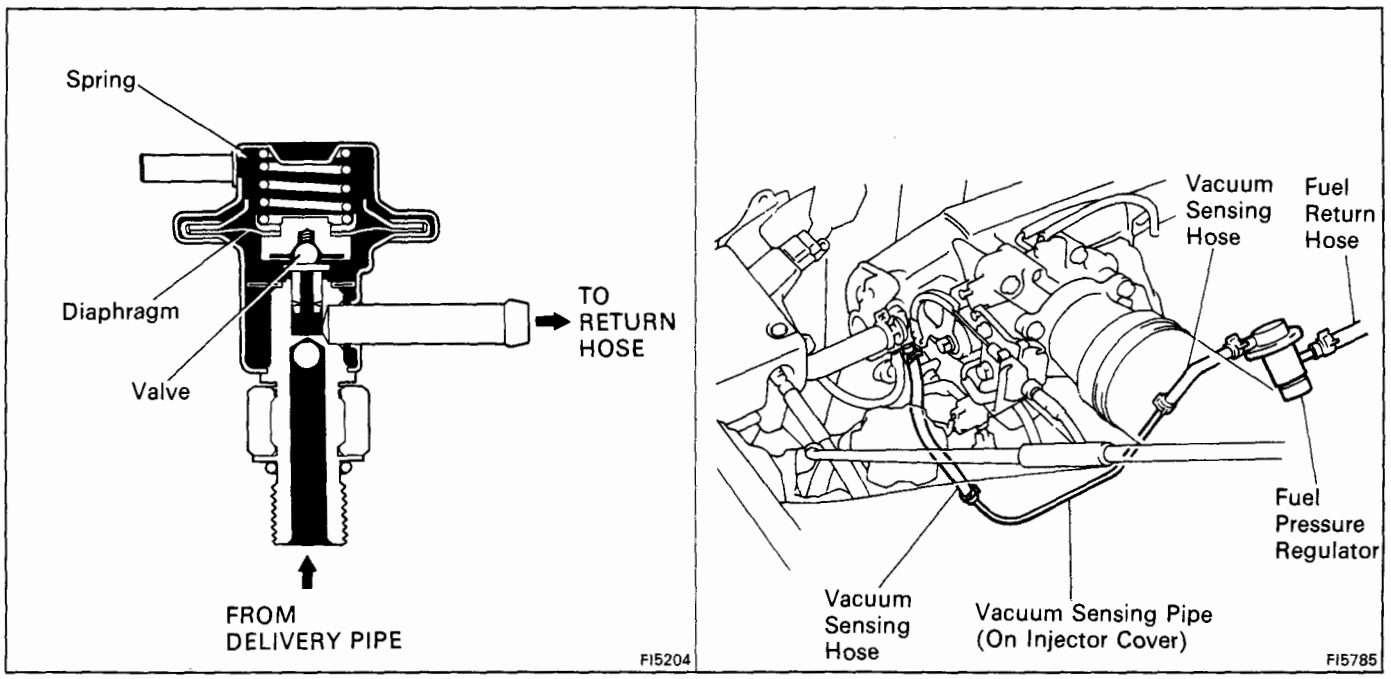

ON-VEHICLE INSPECTION

INSPECT FUEL PRESSURE (See page FI-87)

REMOVAL OF FUEL PRESSURE REGULATOR

1. **REMOVE THROTTLE BODY**
   (See steps 1 to 8, 10 and 11 on pages FI-135 and 136)

2. **REMOVE INJECTORS, FUEL PRESSURE REGULATOR AND DELIVERY PIPE ASSEMBLY**
   (See steps 2 to 15 on pages FI-111 and 112)

3. **REMOVE FUEL INLET HOSE FROM DELIVERY PIPE**
   (See step 16 on page FI-113)

4. **REMOVE INJECTOR COVER FROM DELIVERY PIPE**
   (See step 1 on page FI-115)

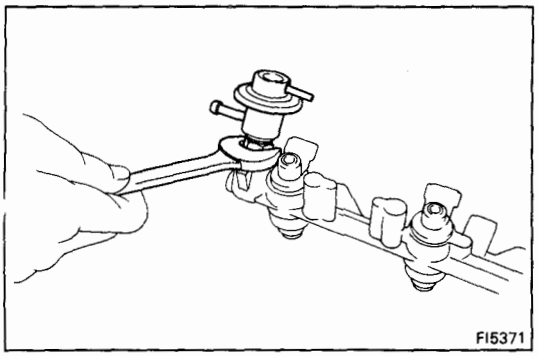

5. **REMOVE FUEL PRESSURE REGULATOR**
   (a) Loosen the lock nut, and remove the pressure regulator.
   (b) Remove the O-ring from the pressure regulator.

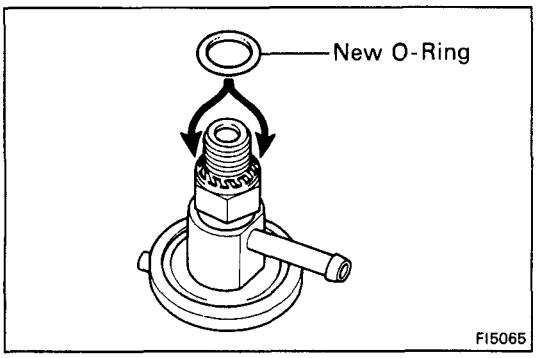

INSTALLATION OF FUEL PRESSURE REGULATOR

1. **INSTALL FUEL PRESSURE REGULATOR**
   (a) Fully loosen the lock nut on the pressure regulator.
   (b) Apply a light coat of gasoline to a new O-ring, and install it to the pressure regulator.

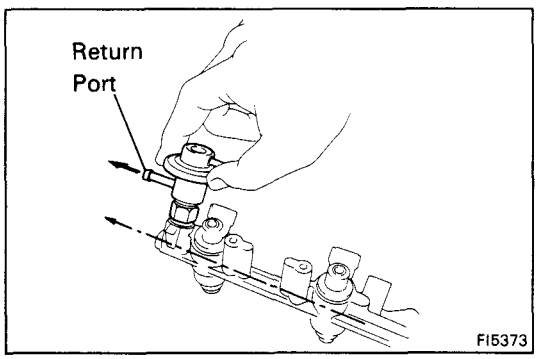

   (c) Completely thrust the pressure regulator into the delivery pipe by hand.
   (d) Turn the pressure regulator counterclockwise until the fuel return port faces in the direction indicated in the figure.

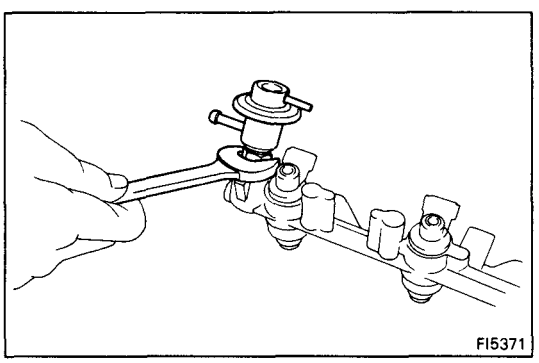

   (e) Tighten the lock nut.
   Torque: 300 kg-cm (22 ft-lb, 29 N·m)

2. **INSTALL INJECTOR COVER TO DELIVERY PIPE**
   (See step 4 on page FI-116)

3. **INSTALL FUEL INLET HOSE TO DELIVERY PIPE**
   (See step 1 on page FI-115)

4. **INSTALL INJECTORS, FUEL PRESSURE REGULATOR AND DELIVERY PIPE ASSEMBLY**
   (See steps 2 to 15 on pages FI-117 to 119)

5. **INSTALL THROTTLE BODY**
   (See steps 2, 3 and 5 to 12 on pages FI-138 and 139)

Fuel Pressure Regulator (5S-FE)

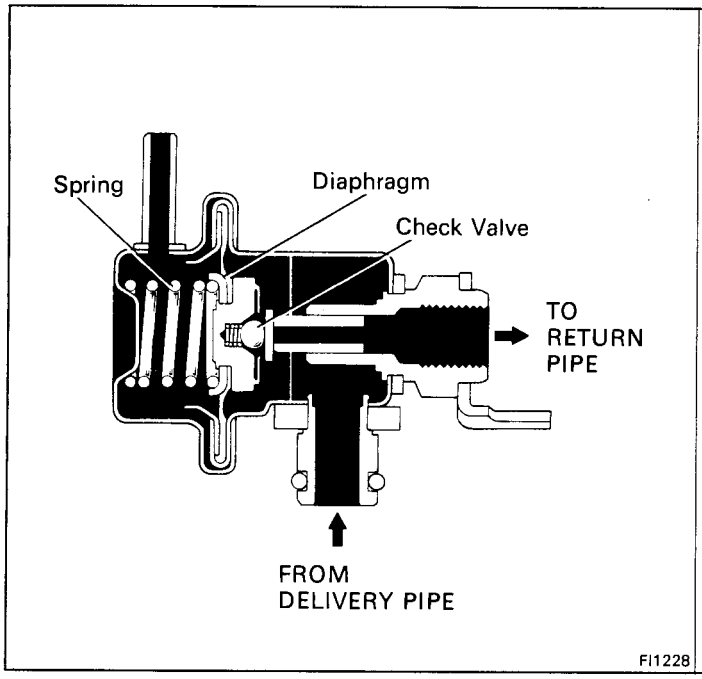

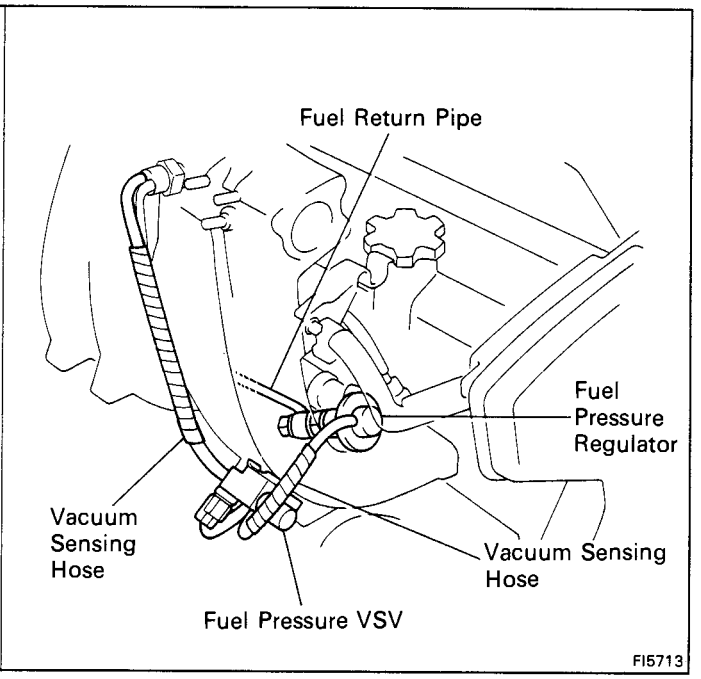

ON-VEHICLE INSPECTION

INSPECT FUEL PRESSURE (See page FI-90)

REMOVAL OF FUEL PRESSURE REGULATOR

1. **DISCONNECT CABLE FROM NEGATIVE TERMINAL OF BATTERY**

   CAUTION: Work must be started after approx. 20 seconds or longer from the time the ignition switch is turned to the "LOCK" position and the negative (–) terminal cable is disconnected from the battery.

2. **REMOVE RH ENGINE HOOD SIDE PANEL**

3. **(w/ CRUISE CONTROL SYSTEM)**
   REMOVE CRUISE CONTROL ACTUATOR
   (See step 11 page EM-182)

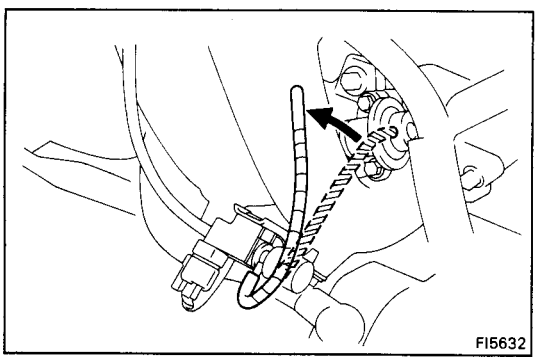

4. **DISCONNECT VACUUM SENSING HOSE FROM FUEL PRESSURE REGULATOR**

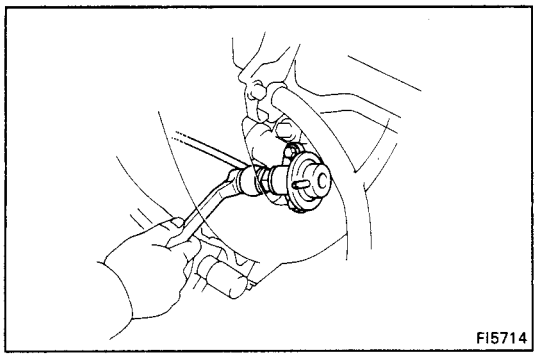

5. DISCONNECT FUEL RETURN PIPE FROM FUEL PRESSURE REGULATOR

Remove the union bolt and two gasket, and disconnect the return pipe from the pressure regulator.

HINT:
- Put a suitable container or shop towel under the pressure regulator.
- Slowly loosen the union bolt.

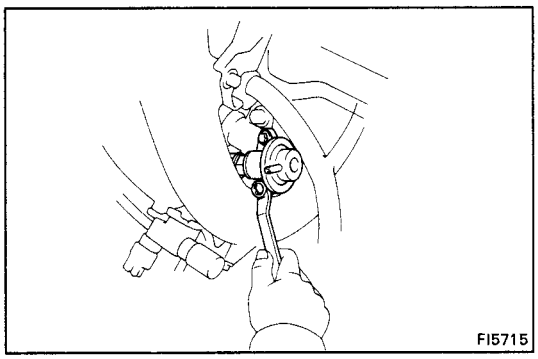

6. REMOVE FUEL PRESSURE REGULATOR

(a) Remove the two bolts, and pull out the pressure regulator.

(b) Remove the O-ring from the pressure regulator.

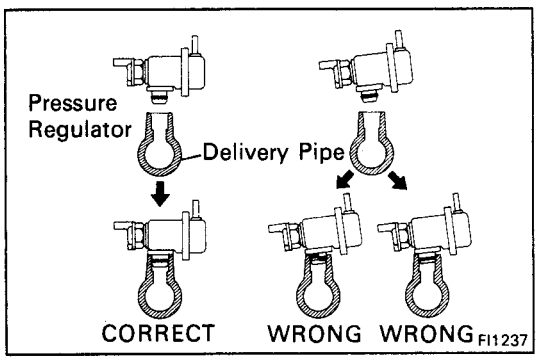

INSTALLATION OF FUEL PRESSURE REGULATOR

1. INSTALL FUEL PRESSURE REGULATOR

(a) Apply a light coat of gasoline to a new O-ring, and install it to the pressure regulator.

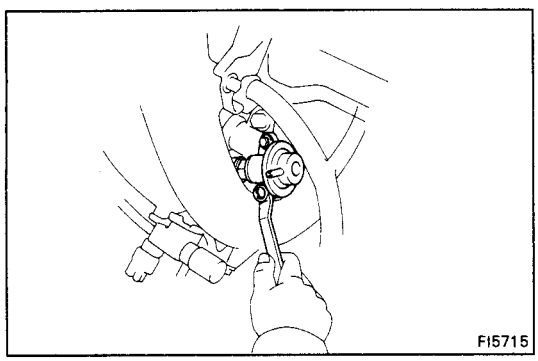

(b) Install the pressure regulator with the two bolts.

Torque: 55 kg-cm (48 in.-lb, 5.4 N·m)

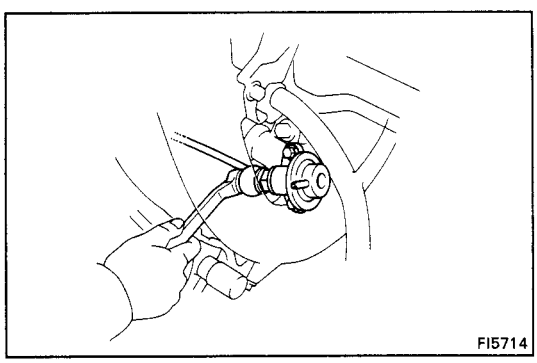

2. CONNECT FUEL RETURN PIPE TO FUEL PRESSURE REGULATOR

Install the return pipe with new two gaskets and the union bolt.

Torque: 180 kg-cm (13 ft-lb, 18 N·m)

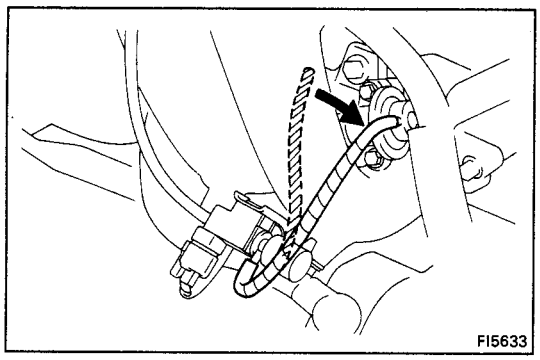

3. **CONNECT VACUUM SENSING HOSE TO FUEL PRESSURE REGULATOR**

4. **(w/ CRUISE CONTROL SYSTEM) INSTALL CRUISE CONTROL ACTUATOR (See step 33 page EM-225)**

5. **INSTALL RH ENGINE HOOD SIDE PANEL**

6. **CONNECT CABLE TO NEGATIVE TERMINAL OF BATTERY**

7. **CHECK FOR FUEL LEAKAGE (See page FI-9)**

Injectors (3S-GTE)

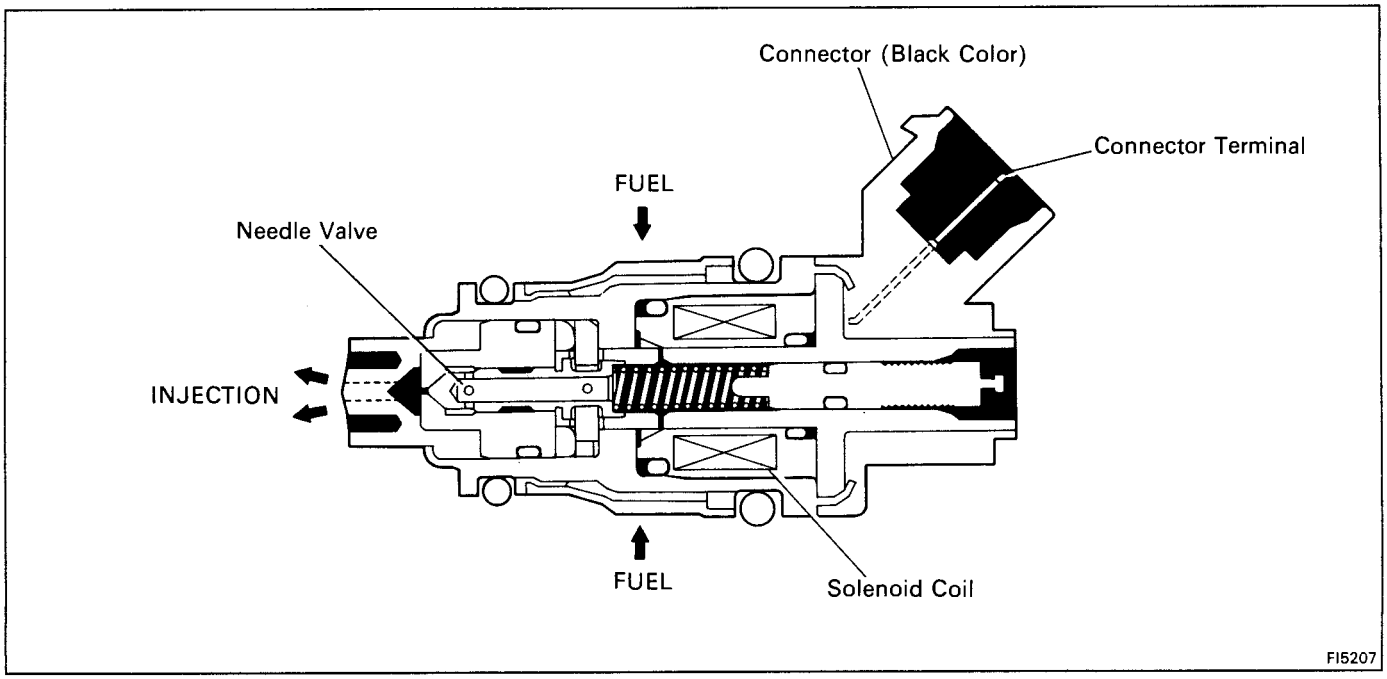

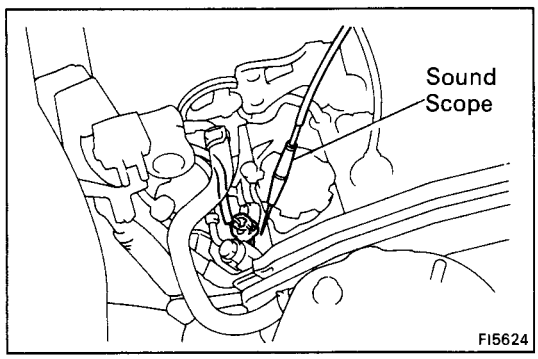

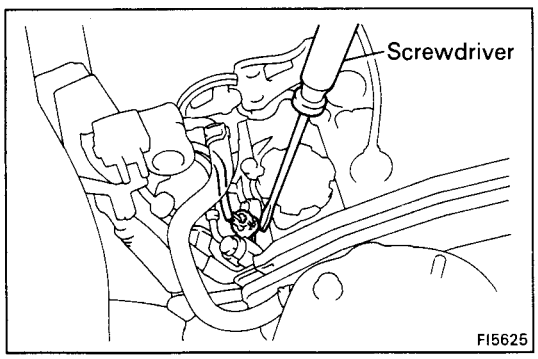

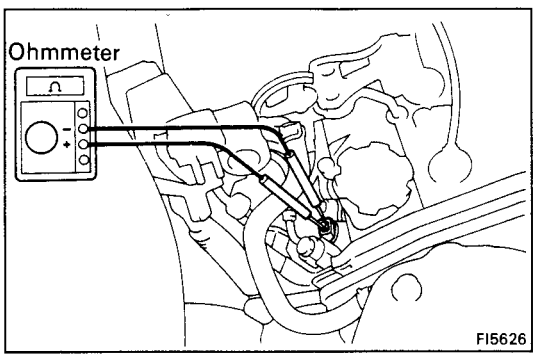

ON-VEHICLE INSPECTION

1. INSPECT INJECTOR OPERATION

Check operation sound from each injector.

(a) With the engine running or cranking, use a sound scope to check that there is normal operating noise in proportion to engine rpm.

(b) If you have no sound scope, you can check the injector transmission operation with a screwdriver.

If no sound or an unusual sound is heard, check the wiring connector, injector or injection signal from the ECU.

2. INSPECT INJECTOR RESISTANCE

(a) Remove the throttle body.
(See steps 1 to 8, 10 and 11 on pages FI-135 and 136)

(b) Disconnect the injector connector.

(c) Using an ohmmeter, measure the resistance between the terminals.

Resistance: 2 – 4 Ω

If the resistance is not as specified, replace the injector.

(d) Reconnect the injector connector.

(e) Reinstall the throttle body.
(See steps 2, 3 and 5 to 12 on pages FI-138 and 139)

REMOVAL OF INJECTORS

1. **REMOVE THROTTLE BODY**
   (See steps 1 to 8, 10 and 11 on pages FI-135 and 136)

2. **REMOVE LH ENGINE HOOD SIDE PANEL**

3. **REMOVE AIR CLEANER**
   (See step 9 on page EM-134)

4. **REMOVE CHARCOAL CANISTER**
   (See steps 19 on page EM-136)

5. **REMOVE EGR VSV AND VACUUM MODULATOR**
   (See step 22 on page EM-66)

6. **REMOVE EGR VALVE AND PIPE**
   (See step 24 on page EM-66)

7. **REMOVE COLD START INJECTOR PIPE**
   (See step 3 on page FI-99)

8. **REMOVE COLD START INJECTOR**
   (See steps 2 and 4 on page FI-100)

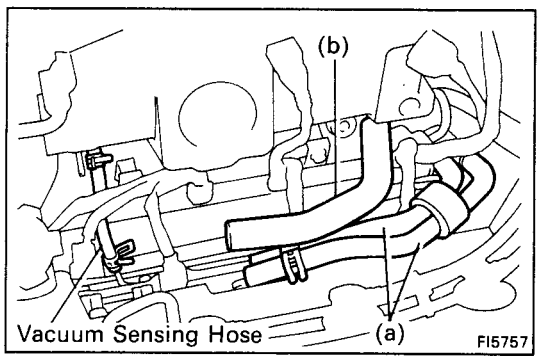

9. **REMOVE WATER BY-PASS HOSES AND AIR HOSE**
   (a) Two ISC water by-pass hoses from No.1 air tube
   (b) ISC air hose from No.1 air tube

10. **DISCONNECT VACUUM SENSING HOSE FROM VACUUM SENSING PIPE ON INJECTOR COVER**

11. **DISCONNECT INJECTOR CONNECTORS**

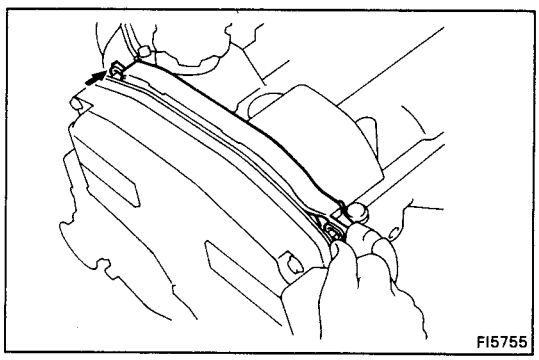

12. **DISCONNECT ENGINE WIRE**
    (a) Disconnect the two wire clamps from the mount bolts of the No.2 timing belt cover.

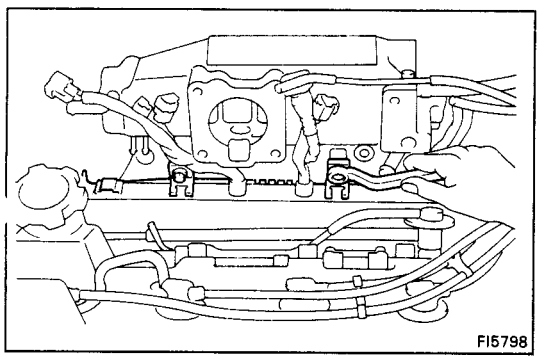

    (b) Disconnect the two wire clamps from the wire brackets on the intake manifold.

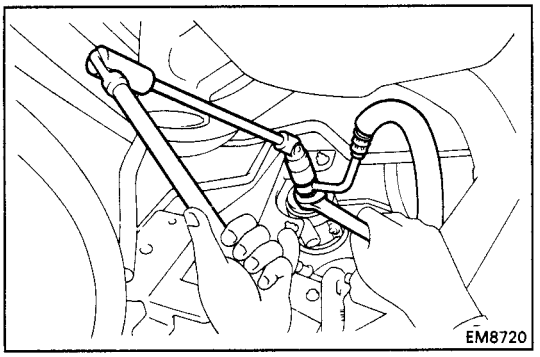

13. DISCONNECT FUEL INLET HOSE FROM FUEL FILTER

Remove the union bolt and two gaskets, and disconnect the inlet hose.

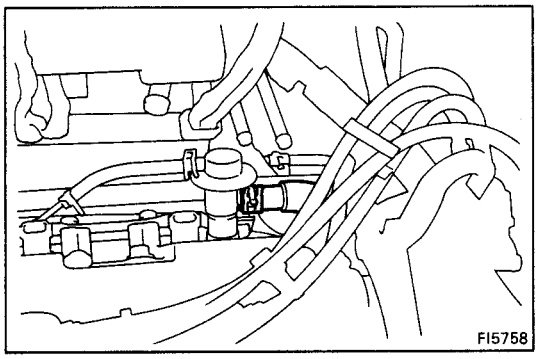

14. DISCONNECT FUEL RETURN HOSE FROM FUEL PRESSURE REGULATOR

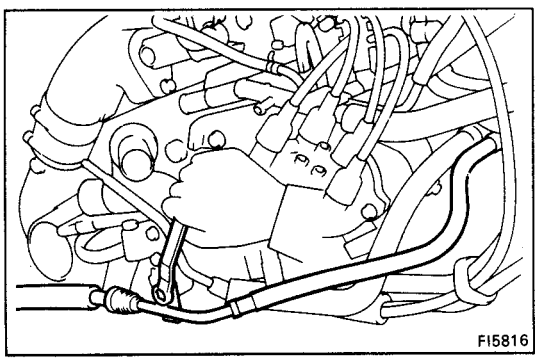

15. REMOVE INJECTOR, FUEL PRESSURE REGULATOR AND DELIVERY PIPE ASSEMBLY

(a) Remove the bolt holding the fuel inlet hose to the water outlet.

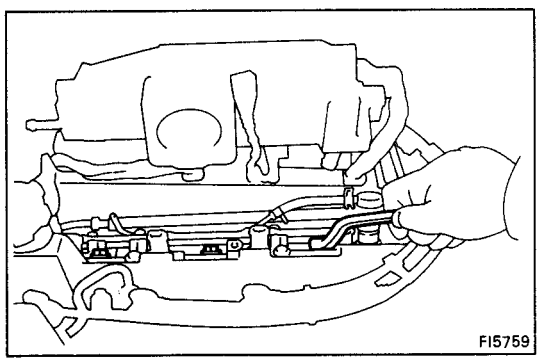

(b) Remove the three bolts holding the delivery pipe to the cylinder head.

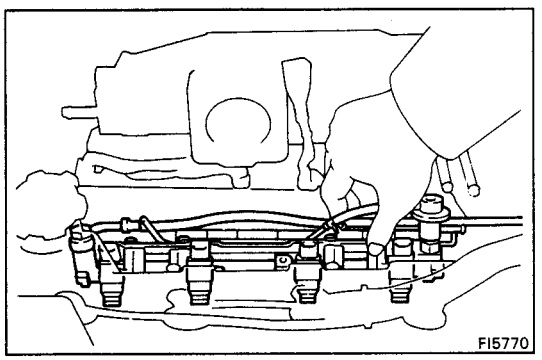

(c) Remove the delivery pipe assembly.

(d) Remove the four insulators and three spacers.

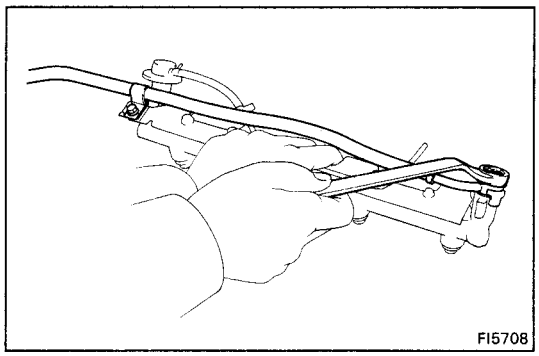

16. REMOVE FUEL INLET HOSE FROM DELIVERY PIPE

Remove the bolt, union bolt, two gaskets and inlet hose.

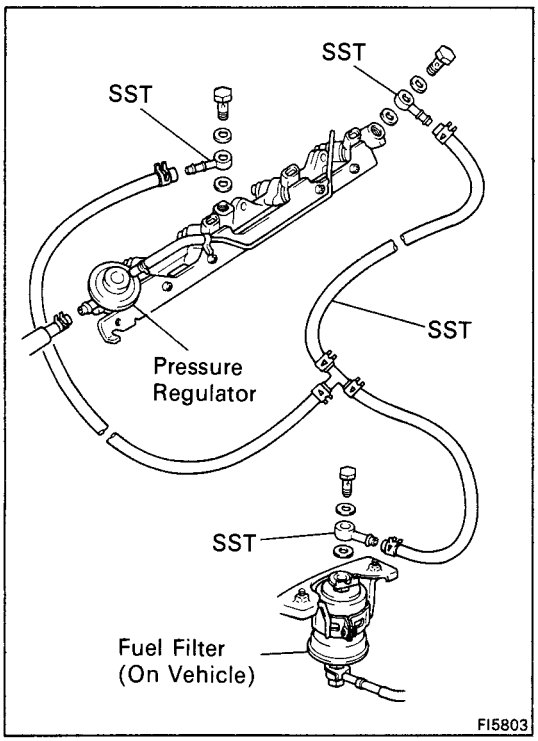

INSPECTION OF INJECTORS

1. INSPECT INJECTOR INJECTION

CAUTION: Keep injector clear of sparks during the test.

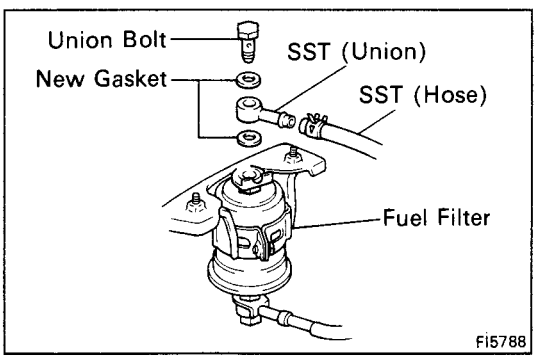

(a) Connect SST (union and hose) to the fuel filter outlet with two new gaskets and the union bolt.

SST 09268-41045 (90405-09015)

HINT: Use the vehicle's fuel filter.

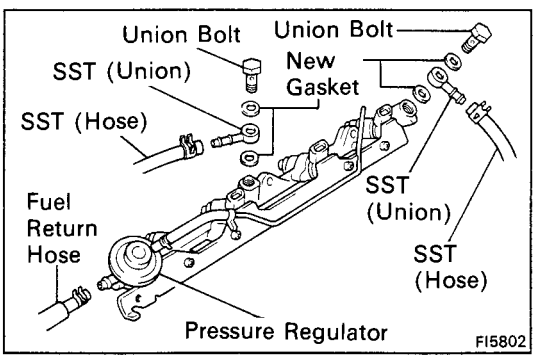

(b) Connect the fuel return hose to the fuel outlet of the pressure regulator on the delivery pipe.

(c) Connect SST (union and hose) to the delivery pipe with four new gaskets and the two union bolts.

SST 09268-41045 (09268-41080, 90405-09015)

(d) Put the injector into the graduated cylinder.

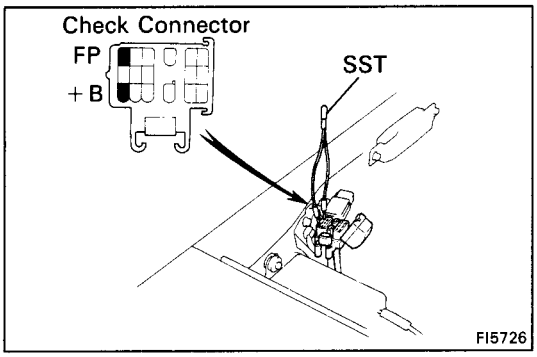

(e) Using SST, connect terminals +B and FP of the check connector.

SST 09843-18020

(f) Reconnect the battery negative (–) cable.

(g) Turn the ignition switch ON.

NOTICE: Do not start the engine.

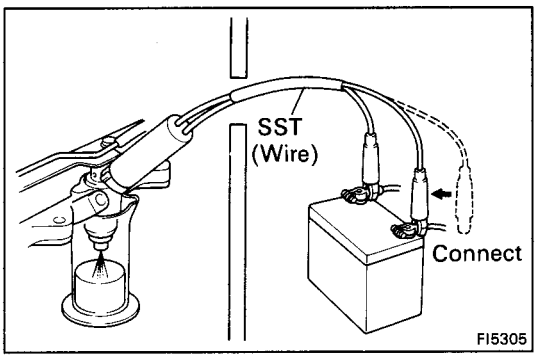

(h) Connect SST (wire) to the injector and battery for 15 seconds, and measure the injection volume with a graduated cylinder. Test each injector two or three times.

SST 09842-30060

Volume: 95 – 120 cc (5.8 – 7.3 cu in.) per 15 sec.

Difference between each injector:
5 cc (0.3 cu in.) or less

If the injection volume is not as specified, replace the injector.

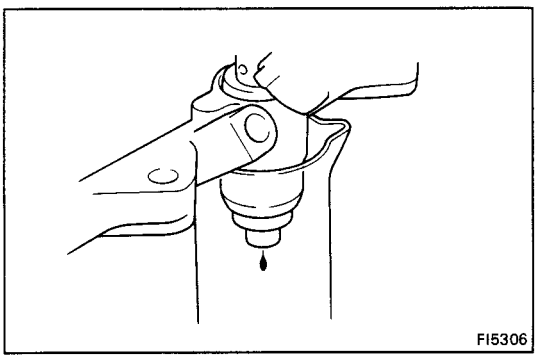

2. INSPECT LEAKAGE

(a) In the condition above, disconnect the test probes of SST (wire) from the battery and check for fuel leakage from the injector.

SST 09842-30060

Fuel drop: One drop or less per minute

(b) Disconnect the battery negative (–) cable.

(c) Remove SST.

SST 09268-41045 and 09843-18020

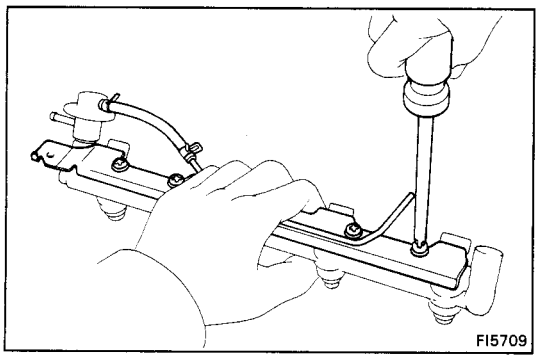

REPLACEMENT OF INJECTORS

1. REMOVE INJECTOR COVER

(a) Disconnect the vacuum sensing hose from the pressure regulator.

(b) Remove the four screws and injector cover.

(c) Remove the four insulators from the injectors.

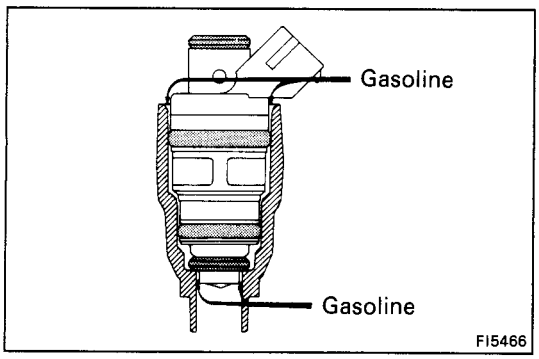

2. REMOVE INJECTORS

(a) Apply gasoline between the delivery pipe and injectors.

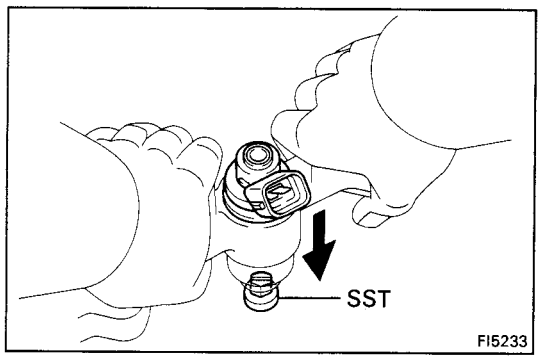

(b) Using SST, lift up the injector.

SST 09268-74010

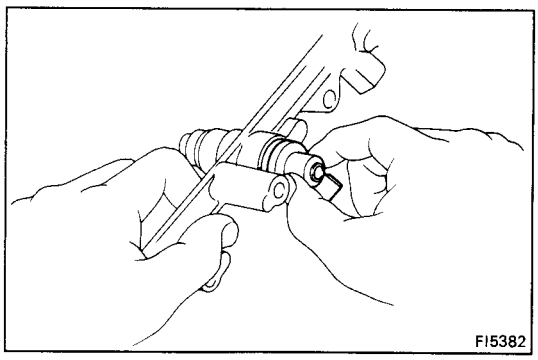

(c) Pull out the four injectors from the delivery pipe.

(d) Remove the insulator and two O-rings from each injector.

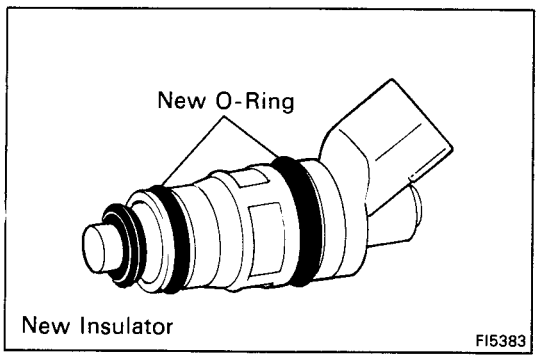

3. INSTALL INJECTORS

(a) Apply a light coat of gasoline to two new O-rings, and install them to the injector.

(b) Install new insulator and two O-rings to each injector.

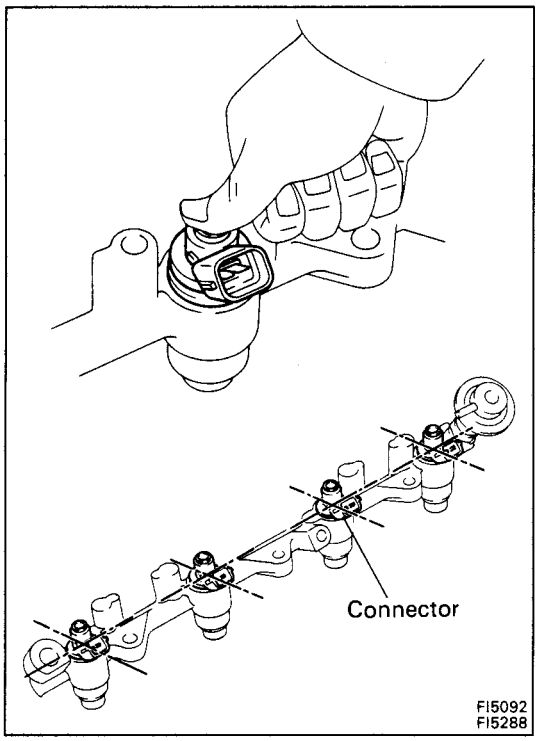

(c) Push in the four injectors so that the injector connectors are positioned as shown in the figure.

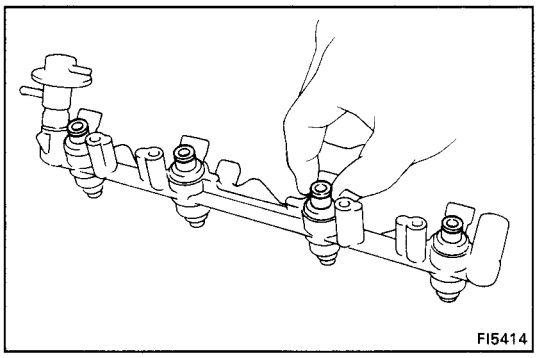

4. INSTALL INJECTOR COVER

(a) Place a new insulator on each injector.

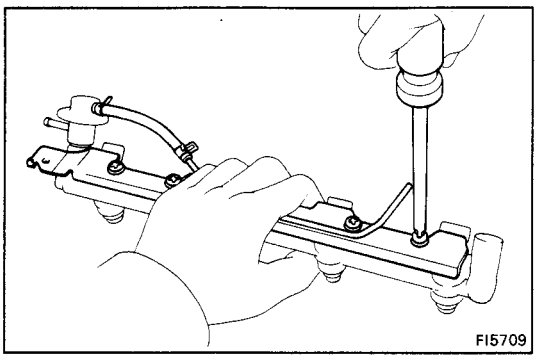

(b) Install the injector cover with the four screws.

Torque: 80 kg-cm (69 in.-lb, 7.8 N·m)

(c) Connect the vacuum sensing hose to the pressure regulator.

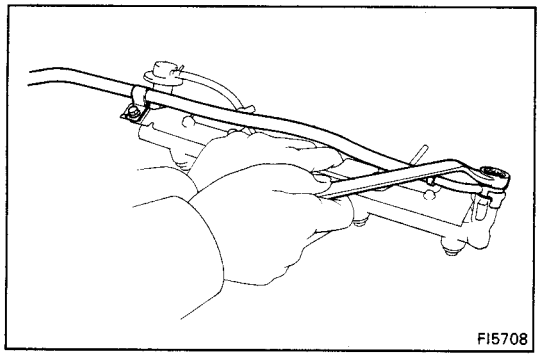

INSTALLATION OF INJECTORS

1. INSTALL FUEL INLET HOSE TO DELIVERY PIPE

Install the inlet hose with the bolt, two new gaskets and union bolt.

Torque:

Bolt	**80 kg-cm (69 in.-lb, 7.8 N·m)**
Union bolt	**300 kg-cm (22 ft-lb, 29 N·m)**

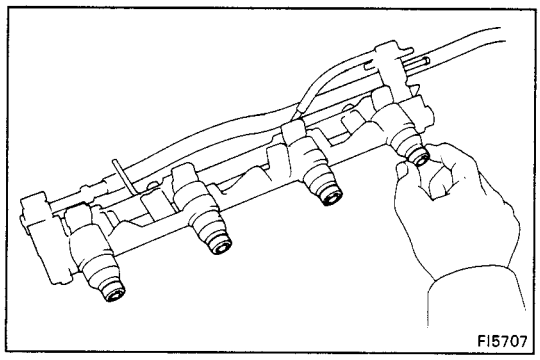

2. INSTALL INJECTORS, FUEL PRESSURE REGULATOR AND DELIVERY PIPE ASSEMBLY

(a) Install a new insulator to each injector.

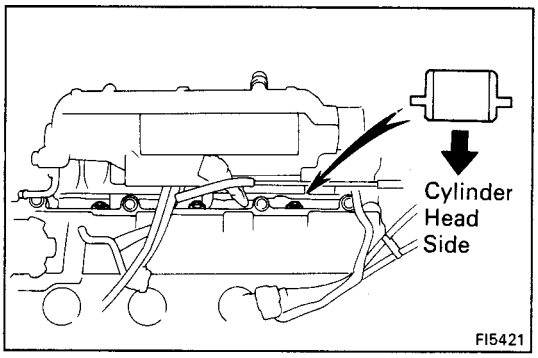

(b) Place the three spacers in position on the cylinder head.

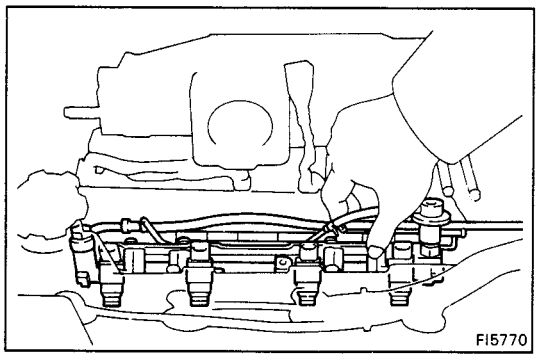

(c) Place the delivery pipe in position on the cylinder head.

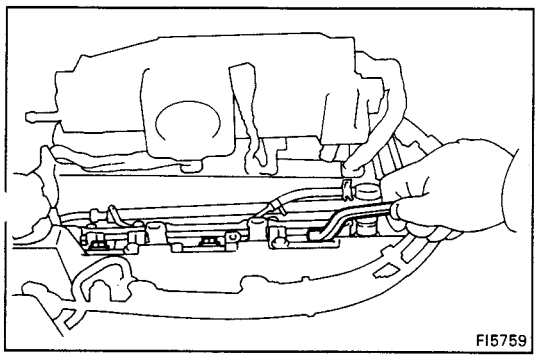

(d) Install the three bolts holding the delivery pipe to the cylinder head.

Torque: 195 kg-cm (14 ft-lb, 19 N·m)

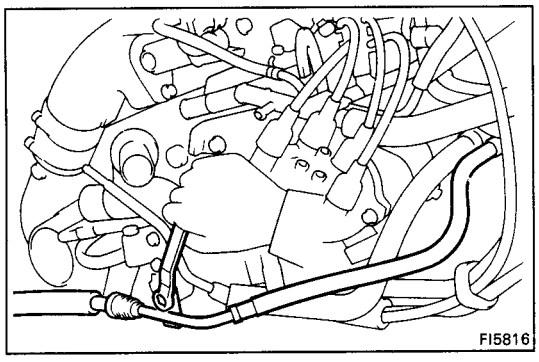

(e) Install the bolt holding the fuel inlet hose to the water outlet.

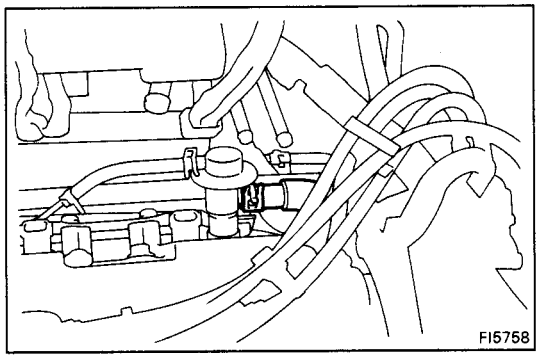

3. CONNECT FUEL RETURN HOSE TO FUEL PRESSURE REGULATOR

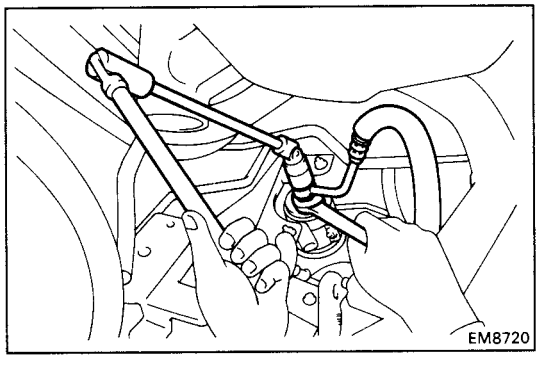

4. CONNECT FUEL INLET HOSE TO FUEL FILTER

Install the inlet hose with two new gaskets and the union bolt.

Torque: 300 kg-cm (22 ft-lb, 29 N·m)

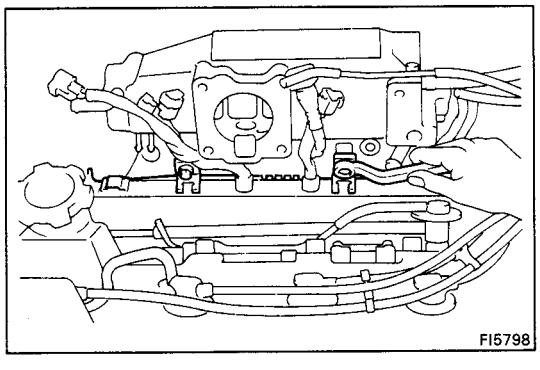

5. INSTALL ENGINE WIRE

(a) Install the two wire clamps to the intake manifold, with the two bolts.

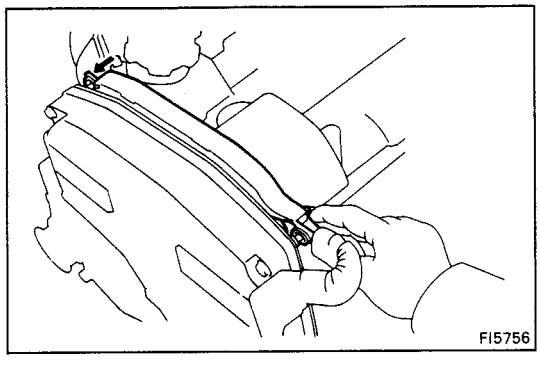

(b) Install the two wire clamps to the mount bolts of the No.2 timing belt cover.

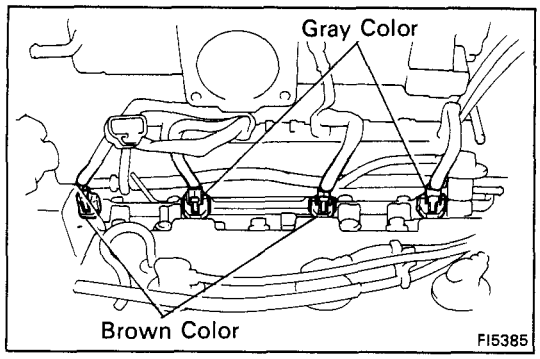

6. CONNECT INJECTOR CONNECTORS

Connect the injector connectors as shown in the figure.

HINT: No.1 and No.3 injector connectors are brown. No.2 and No.4 injector connectors are gray.

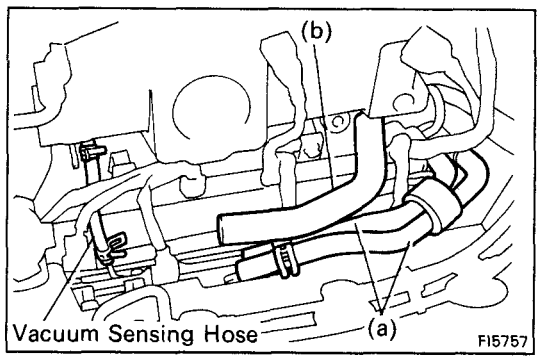

7. INSTALL WATER BY-PASS HOSES AND AIR HOSE

(a) Two ISC water by-pass hoses from No.1 air tube

(b) ISC air hose from No.1 air tube

8. CONNECT VACUUM SENSING HOSE TO VACUUM SENSING PIPE ON INJECTOR COVER

9. INSTALL COLD START INJECTOR
(See steps 1 and 3 on page FI-101)

10. INSTALL COLD START INJECTOR PIPE
(See step 2 on page FI-101)

11. INSTALL EGR VALVE AND PIPE
(See step 18 on page EM-92)

12. INSTALL EGR VSV AND VACUUM MODULATOR
(See step 20 on page EM-92)

13. INSTALL CHARCOAL CANISTER
(See step 30 on page EM-177)

14. INSTALL AIR CLEANER
(See step 40 on page EM-179)

15. INSTALL LH ENGINE HOOD SIDE PANEL

16. INSTALL THROTTLE BODY
(See steps 2, 3 and 5 to 12 on pages FI-138 and 139)

Injectors (5S-FE)

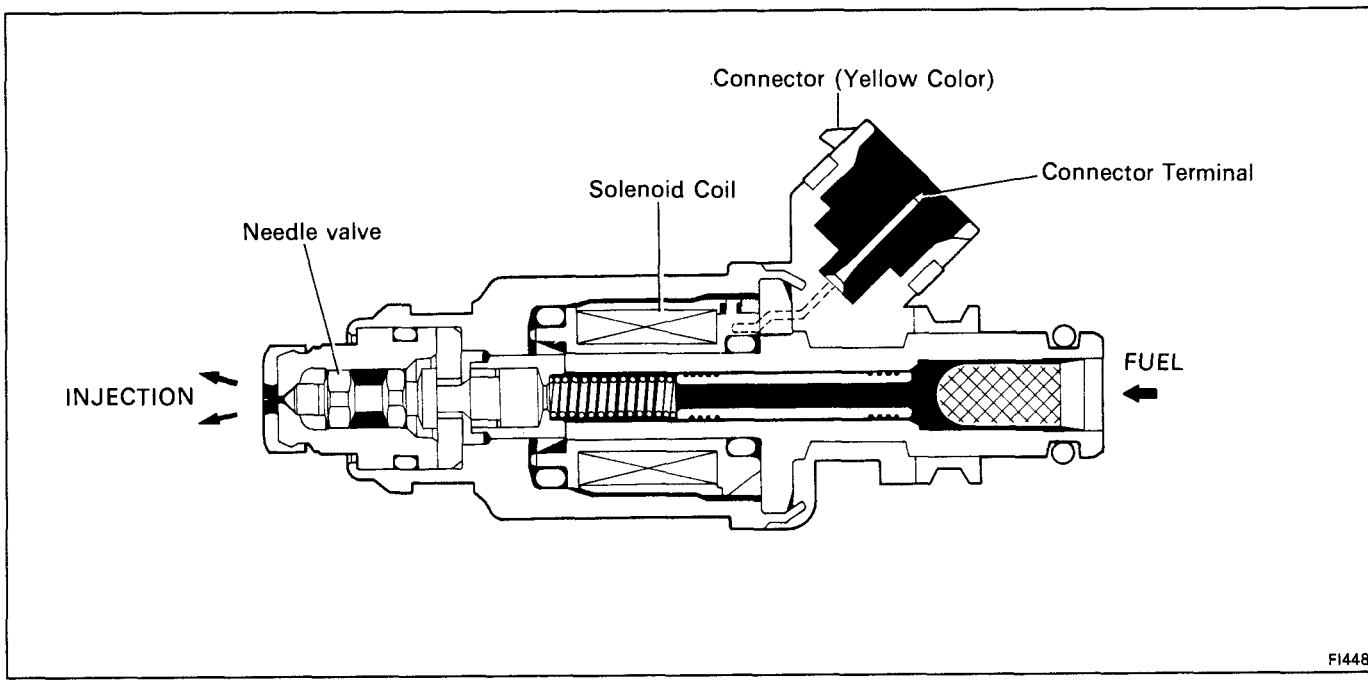

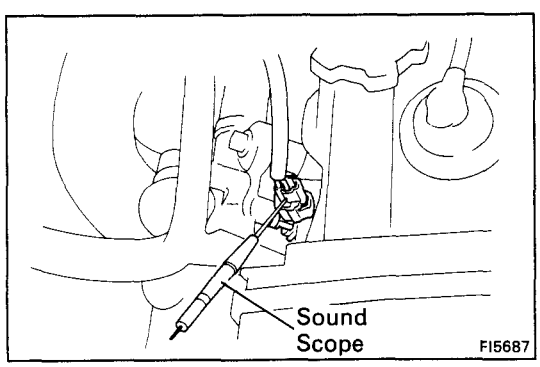

ON-VEHICLE INSPECTION

1. INSPECT INJECTOR OPERATION

Check operation sound from each injector.

(a) With the engine running or cranking, use a sound scope to check that there is normal operating noise in proportion to engine rpm.

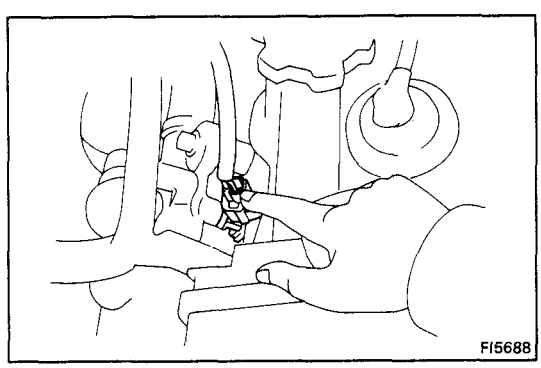

(b) If you have no sound scope, you can check the injector transmission operation with your finger.

If no sound or an unusual sound is heard, check the wiring connector, injector or injection signal from the ECU.

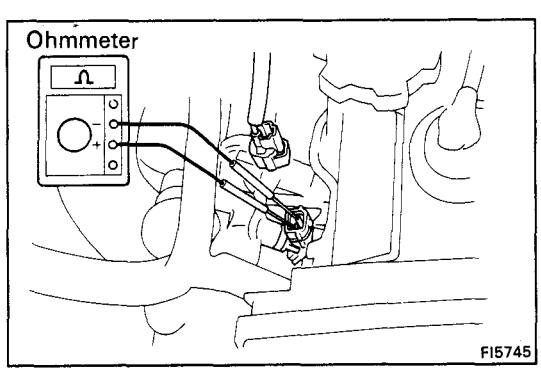

2. INSPECT INJECTOR RESISTANCE

(a) Disconnect the injector connector.

(b) Using an ohmmeter, measure the resistance between the terminals.

Resistance: Approx. 13.8 Ω

If the resistance is not as specified, replace the injector.

(c) Reconnect the injector connector.

REMOVAL OF INJECTORS

1. **DISCONNECT CABLE FROM NEGATIVE TERMINAL OF BATTERY**

   CAUTION: Work must be started after approx. 20 seconds or longer from the time the ignition switch is turned to the "LOCK" position and the negative (–) terminal cable is disconnected from the battery.

2. **REMOVE ENGINE HOOD SIDE PANELS**

3. **REMOVE AIR CLEANER**
   (See step 9 on page EM-182)

4. **(w/ CRUISE CONTROL SYSTEM)**
   REMOVE CRUISE CONTROL ACTUATOR
   (See step 11 on page EM-182)

5. **REMOVE COLD START INJECTOR PIPE**
   (See step 3 on page FI-102)

6. **DISCONNECT BRAKE BOOTER VACUUM HOSE FROM INTAKE MANIFOLD**

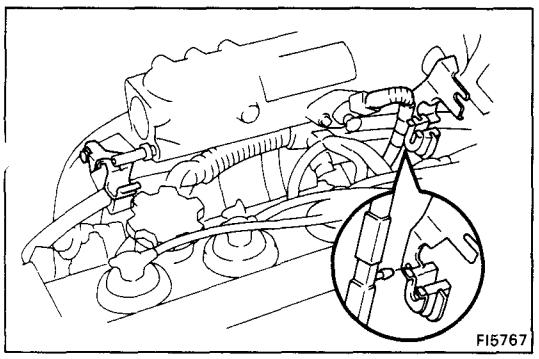

7. **REMOVE ACCELERATOR BRACKETS**
   (a) Remove the bolt and RH accelerator bracket.
   (b) Disconnect the clip of the engine wire from the LH accelerator bracket. Remove the two bolts and LH accelerator bracket.

8. **DISCONNECT INJECTOR CONNECTORS**

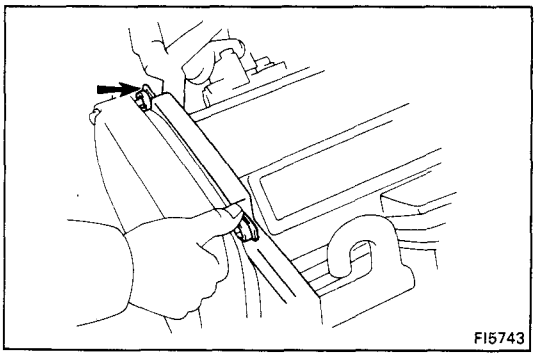

9. **DISCONNECT ENGINE WIRE**
   (a) Disconnect the two wire clamps from the mount bolts of the No.2 timing belt cover.

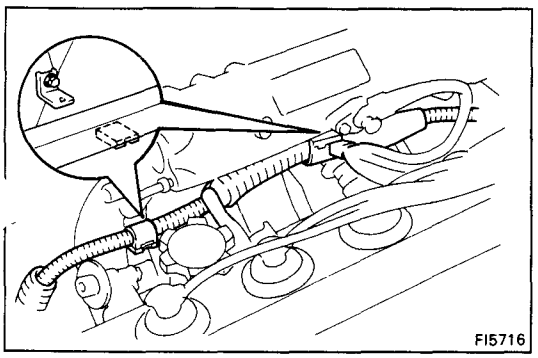

   (b) Disconnect the two wire clamps from the wire brackets on the intake manifold.

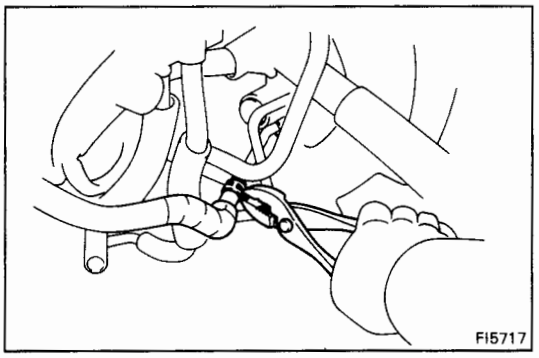

10. DISCONNECT FUEL HOSE FROM RETURN PIPE

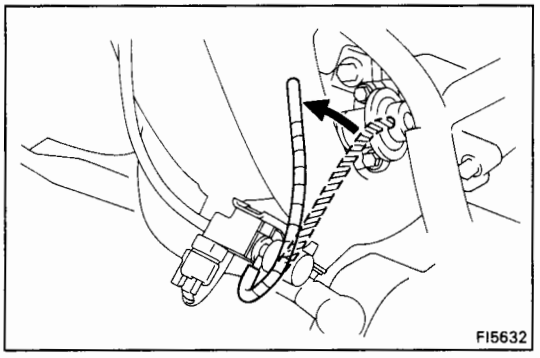

11. DISCONNECT VACUUM SENSING HOSE FROM FUEL PRESSURE REGULATOR

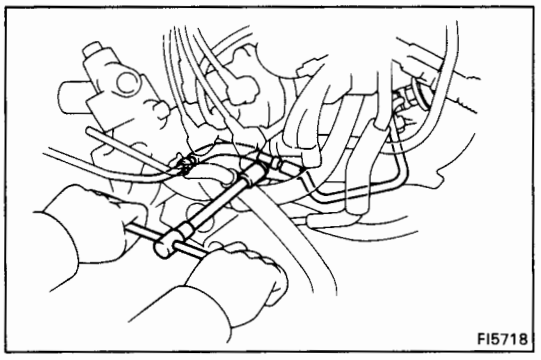

12. REMOVE DELIVERY PIPE AND INJECTORS

(a) Remove the bolt holding the fuel inlet hose to the cylinder head.

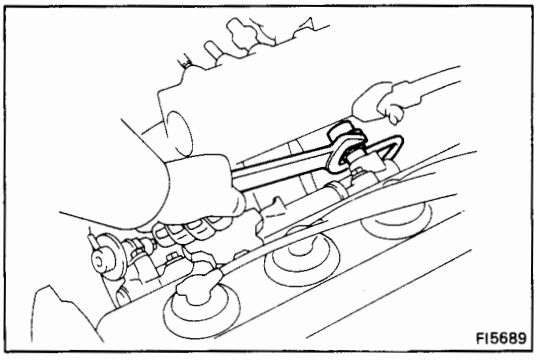

(b) Loosen the pulsation damper.

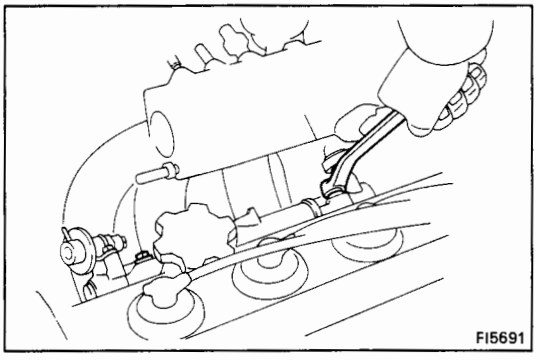

(c) Loosen the two bolts holding the delivery pipe to the cylinder head.

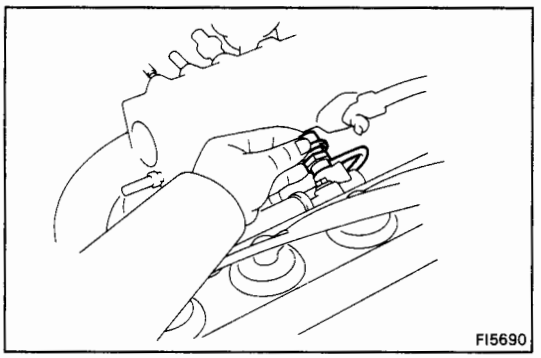

(d) Remove the pulsation damper, and disconnect the fuel inlet hose from the delivery pipe.

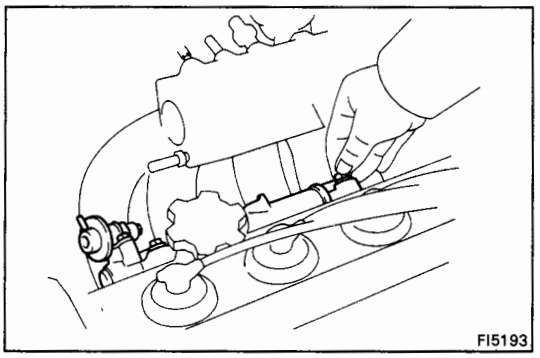

(e) Remove the two bolts and delivery pipe together with four injectors.

NOTICE: Be careful not to drop the injectors, when removing the delivery pipe.

(f) Remove the four insulators and two spacers from the cylinder head.

(g) Pull out the four injectors from the delivery pipe.

(h) Remove the O-ring and grommet from each injector.

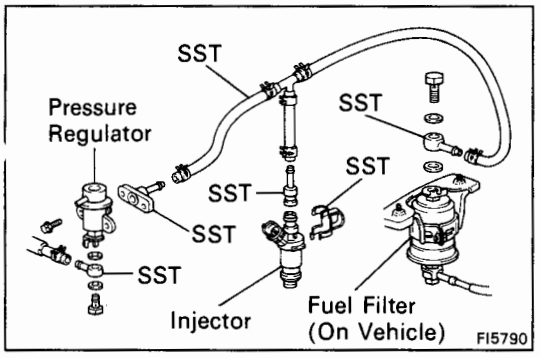

INSPECTION OF INJECTORS

1. INSPECT INJECTOR INJECTION

CAUTION: Keep injector clear of sparks during the test.

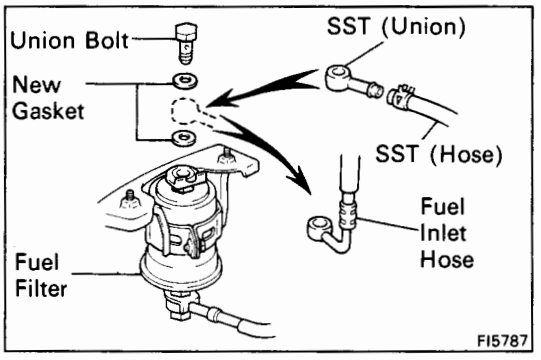

(a) Disconnect the fuel inlet hose from the fuel filter outlet.

(b) Connect SST (union and hose) to the fuel filter outlet with two new gaskets and the union bolt.

SST 09268-41045 (90405-09015)

HINT: Use the vehicle's fuel filter.

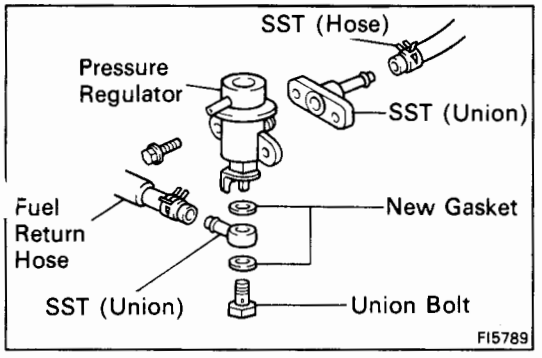

(c) Remove the pressure regulator from the delivery pipe.

(d) Install a new O-ring to the fuel inlet of pressure regulator.

(e) Connect SST (hose) to the fuel inlet of the pressure regulator with SST (union) and the two bolts.

SST 09268-41045 (09268-41090)

(f) Connect the fuel return hose to the fuel outlet of the pressure regulator with SST (union), two new gaskets and union bolt.

SST 09268-41045 (09268-41080)

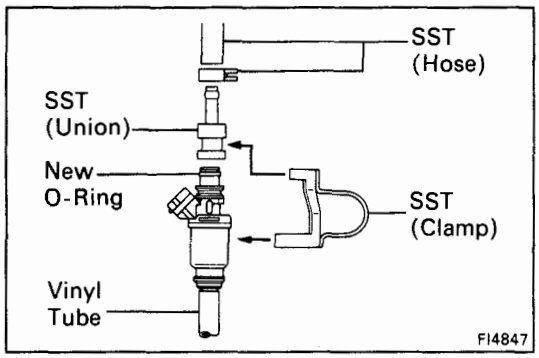

(g) Install the grommet and a new O-ring to the injector.

(h) Connect SST (union and hose) to the injector, and hold the injector and union with SST (clamp).

SST 09268-41045

(i) Put the injector into the graduated cylinder.

HINT: Install a suitable vinyl hose onto the injector to prevent gasoline from splashing out.

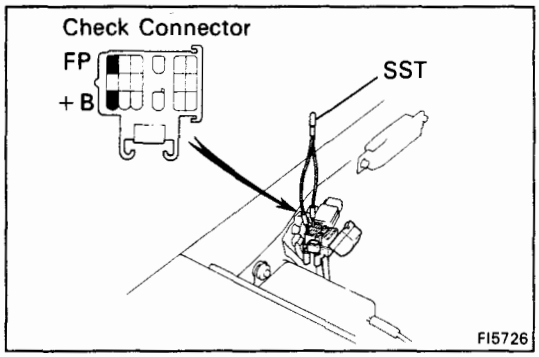

(j) Using SST, connect terminals +B and FP of the check connector.

SST 09843-18020

(k) Reconnect the battery negative (–) cable.

(l) Turn the ignition switch ON.

NOTICE: Do not start the engine.

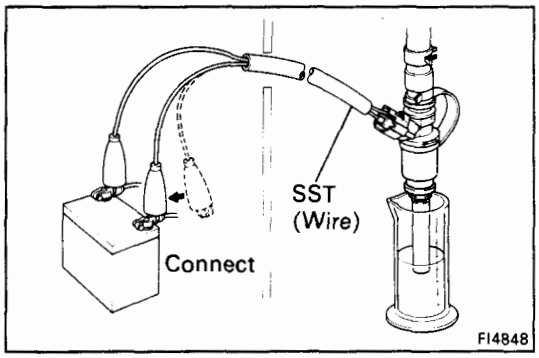

(m) Connect SST (wire) to the injector and battery for 15 seconds, and measure the injection volume with a graduated cylinder. Test each injector two or three times.

SST 09842-30070

Volume: 45 – 55 cc (2.7 – 3.4 cu in.) per 15 sec.

Difference between each injector:
5 cc (0.3 cu in.) or less

If the injection volume is not as specified, replace the injector.

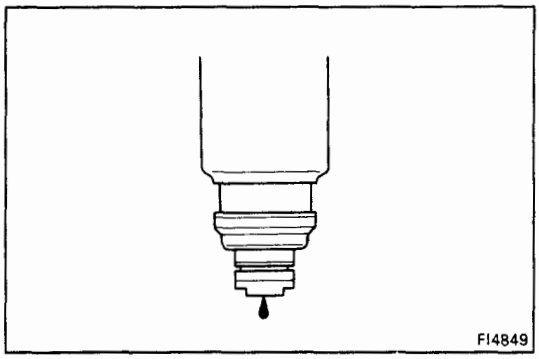

2. INSPECT LEAKAGE

(a) In the condition above, disconnect the test probes of SST (wire) from the battery and check the fuel leakage from the injector.

SST 09842-30070

Fuel drop: One drop or less per minute

(b) Disconnect the battery negative (–) cable.

(c) Remove SST.

SST 09268-41045 and 09843-18020

(d) Reinstall the pressure regulator to the delivery pipe.

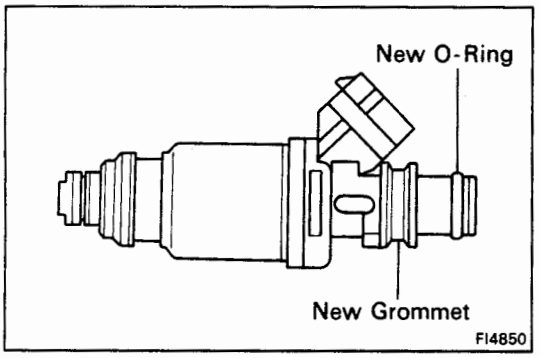

INSTALLATION OF INJECTORS

1. INSTALL INJECTORS AND DELIVERY PIPE

(a) Install a new grommet to the injector.

(b) Apply a light coat of gasoline to a new O-ring and install it to the injector.

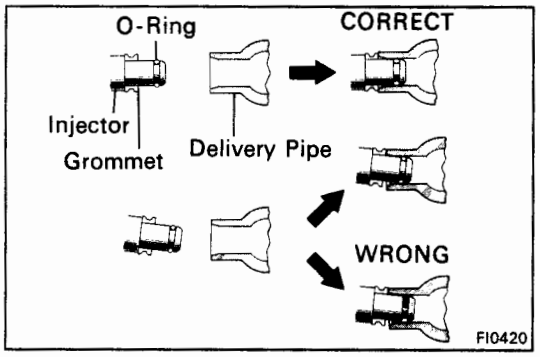

(c) While turning the injector left and right, install it to the delivery pipes. Install the four injectors.

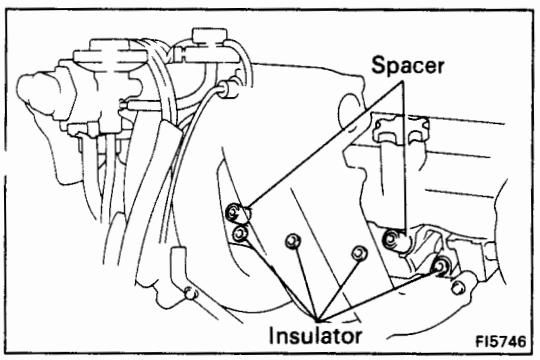

(d) Place four new insulators and the two spacers in position on the cylinder head.

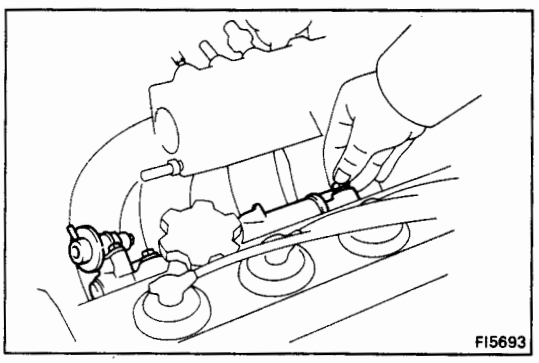

(e) Place the four injectors together with the delivery pipe in position on the cylinder head.

(f) Temporarily install the two bolts holding the delivery pipe to the cylinder head.

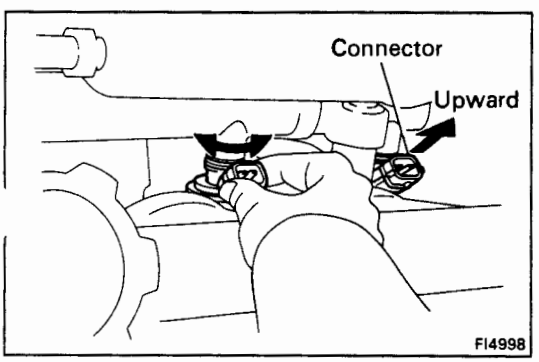

(g) Check that the injectors rotate smoothly.

HINT: If injectors do not rotate smoothly, the probable cause is incorrect installation of O-rings. Replace the O-rings.

(h) Position the injector connector upward.

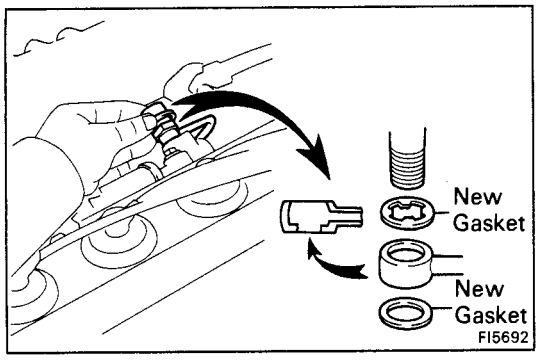

(i) Temporarily connect the fuel inlet hose to the delivery pipe with two new gaskets and the pulsation damper.

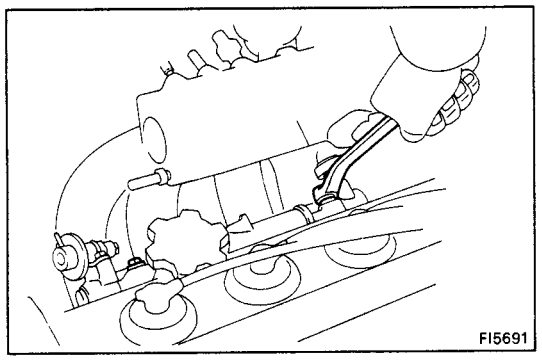

(j) Tighten the two bolts holding the delivery pipe to the cylinder head.

Torque: 130 kg-cm (9 ft-lb, 13 N·m)

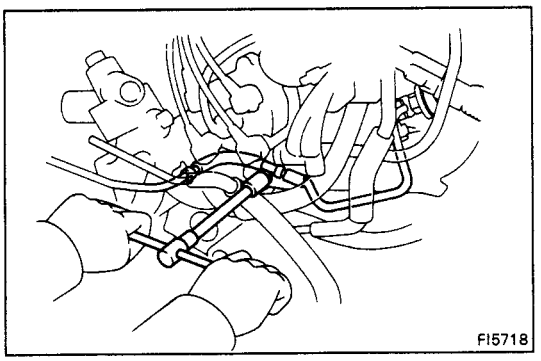

(k) Install the bolt holding the fuel inlet hose to the cylinder head.

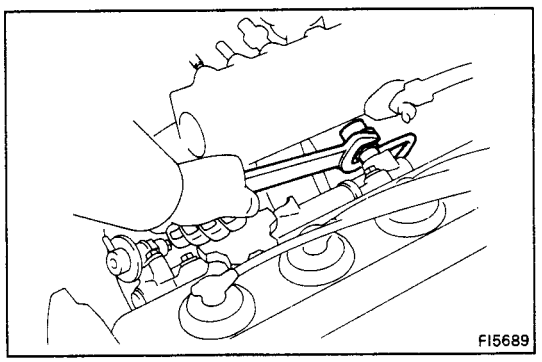

(l) Tighten the pulsation damper.

Torque: 350 kg-cm (25 ft-lb, 34 N·m)

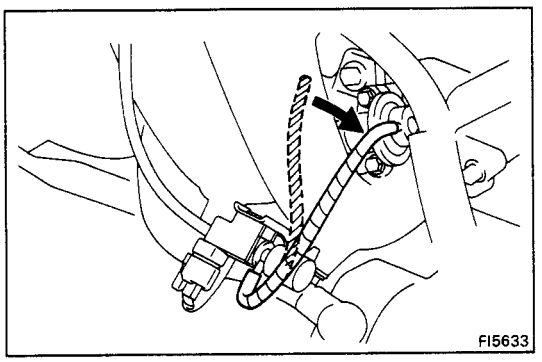

2. CONNECT VACUUM SENSING HOSE TO FUEL PRESSURE REGULATOR

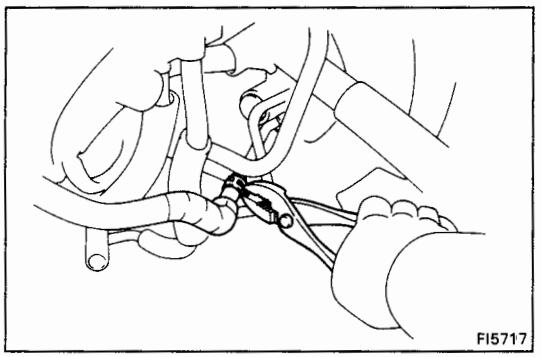

3. CONNECT FUEL RETURN HOSE TO RETURN PIPE

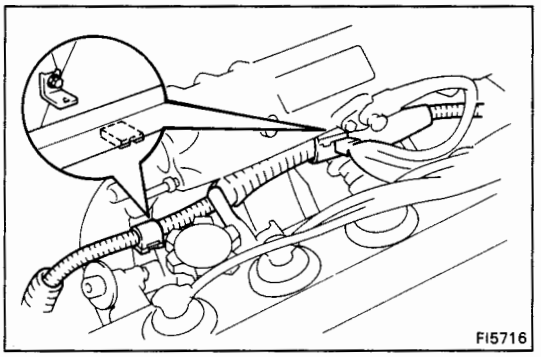

4. INSTALL ENGINE WIRE

(a) Install the two wire clamps to the wire brackets on the intake manifold.

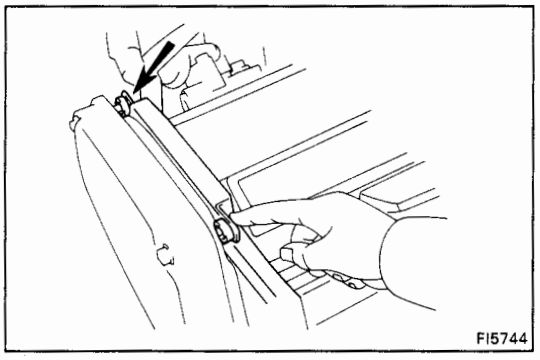

(b) Install the two wire clamps to the mount bolts of the No.2 timing belt cover.

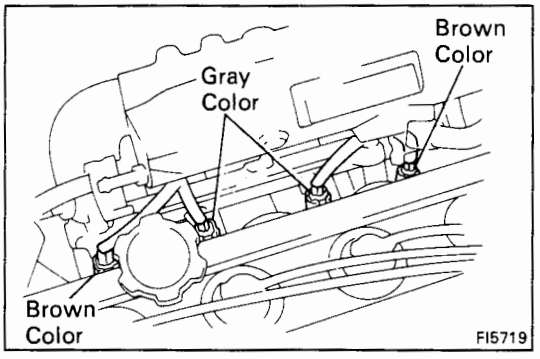

5. CONNECT INJECTOR CONNECTORS

Connect the injector connectors as shown in the figure.

HINT: No.1 and No.4 injector connectors are brown. No.2 and No.3 injector connectors are gray.

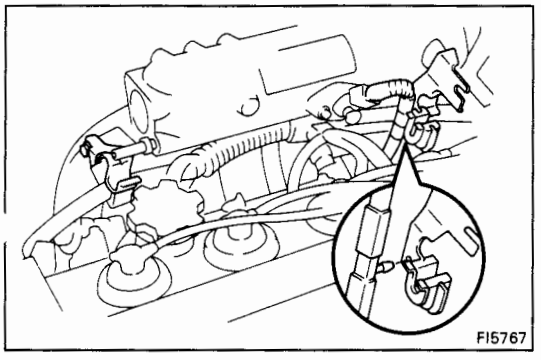

6. INSTALL ACCELERATOR BRACKETS

(a) Install the RH accelerator bracket with the bolt.

(b) Install the LH accelerator bracket with the two bolts. Connect the clip of the engine wire to the LH accelerator bracket.

7. CONNECT BRAKE BOOSTER VACUUM HOSE TO INTAKE MANIFOLD

8. INSTALL COLD START INJECTOR PIPE
(See step 2 on page FI-104)

9. (w/ CRUISE CONTROL SYSTEM)
INSTALL CRUISE CONTROL ACTUATOR
(See step 33 on page EM-225)

10. INSTALL AIR CLEANER
(See step 35 on page EM-226)

11. INSTALL ENGINE HOOD SIDE PANELS

12. CONNECT CABLE TO NEGATIVE TERMINAL OF BATTERY

13. CHECK FOR FUEL LEAKAGE (See page FI-9)

Fuel Tank and Lines

COMPONENTS

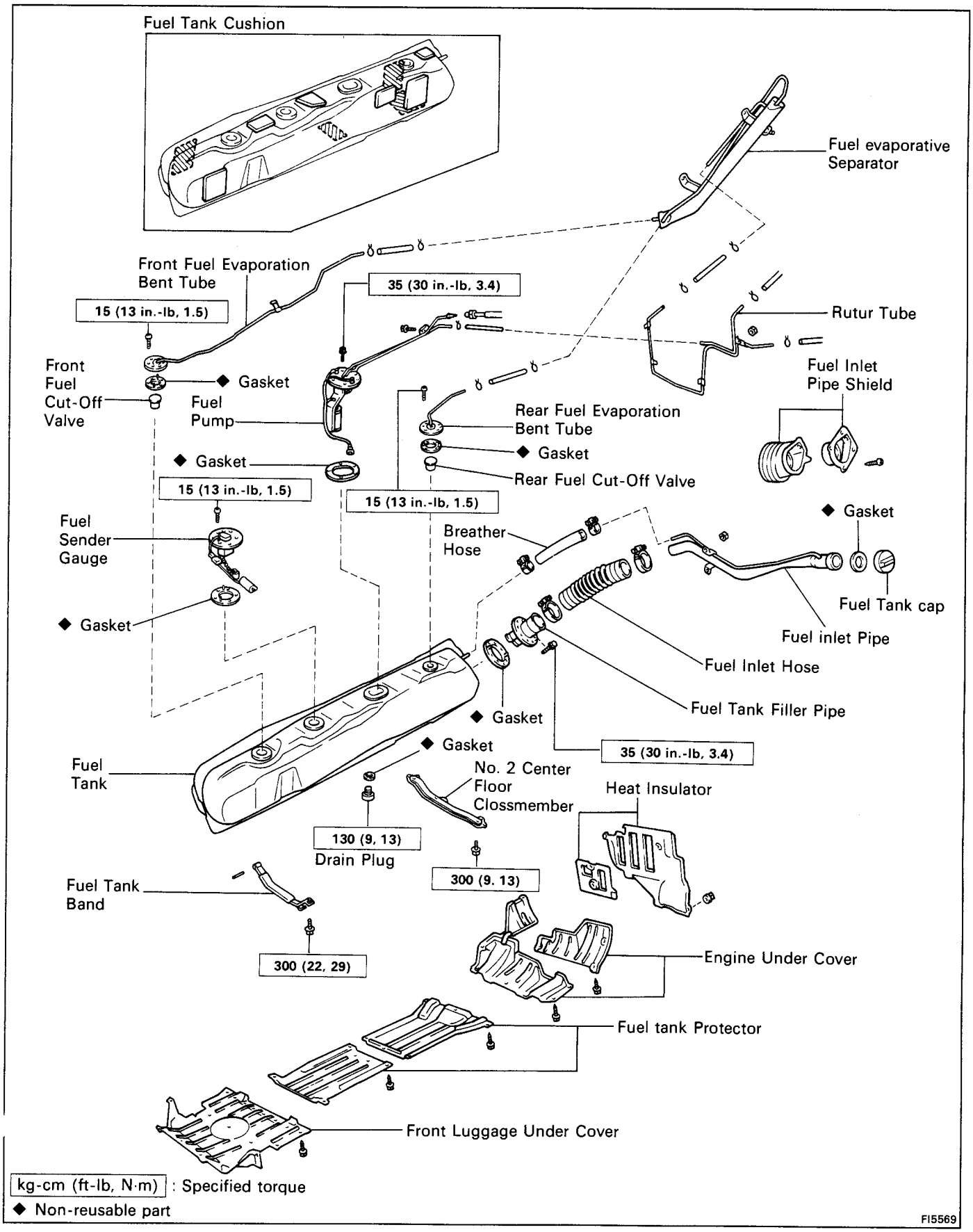

PRECAUTIONS

1. **Always use new gaskets when replacing the fuel tank or component parts.**
2. **Apply the proper torque to all parts tightened.**

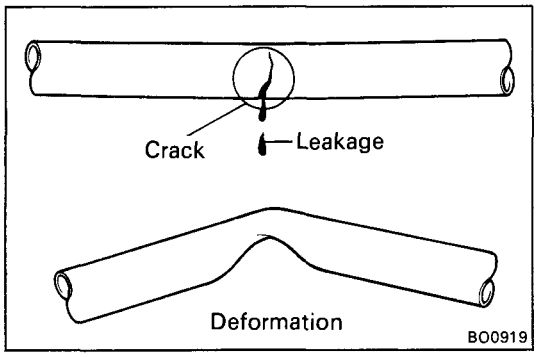

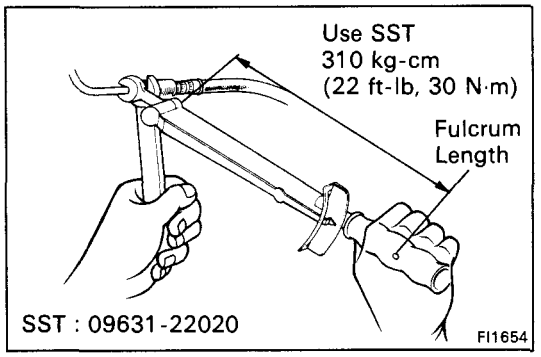

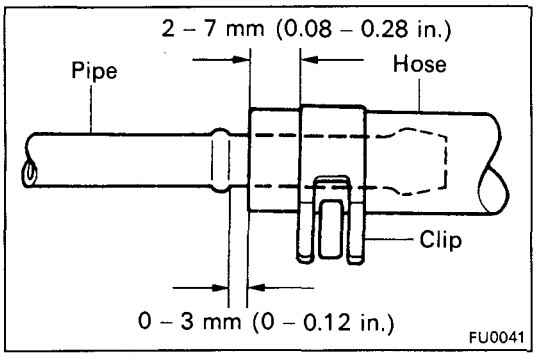

INSPECT FUEL LINES AND CONNECTIONS

(a) Check the fuel lines for cracks or leakage, and all connections f.

(b) Check the fuel tank vapor vent system hoses and connections for looseness, sharp bends or damage.

(c) Check the fuel tank for deformation, cracks, fuel leakage or tank band looseness.

(d) Check the filler neck for damage or fuel leakage.

(e) Hose and tube connections are as shown in the illustration.

If a problem is found, repair or replace the parts as necessary.

AIR INDUCTION SYSTEM
Air Flow Meter (3S-GTE)

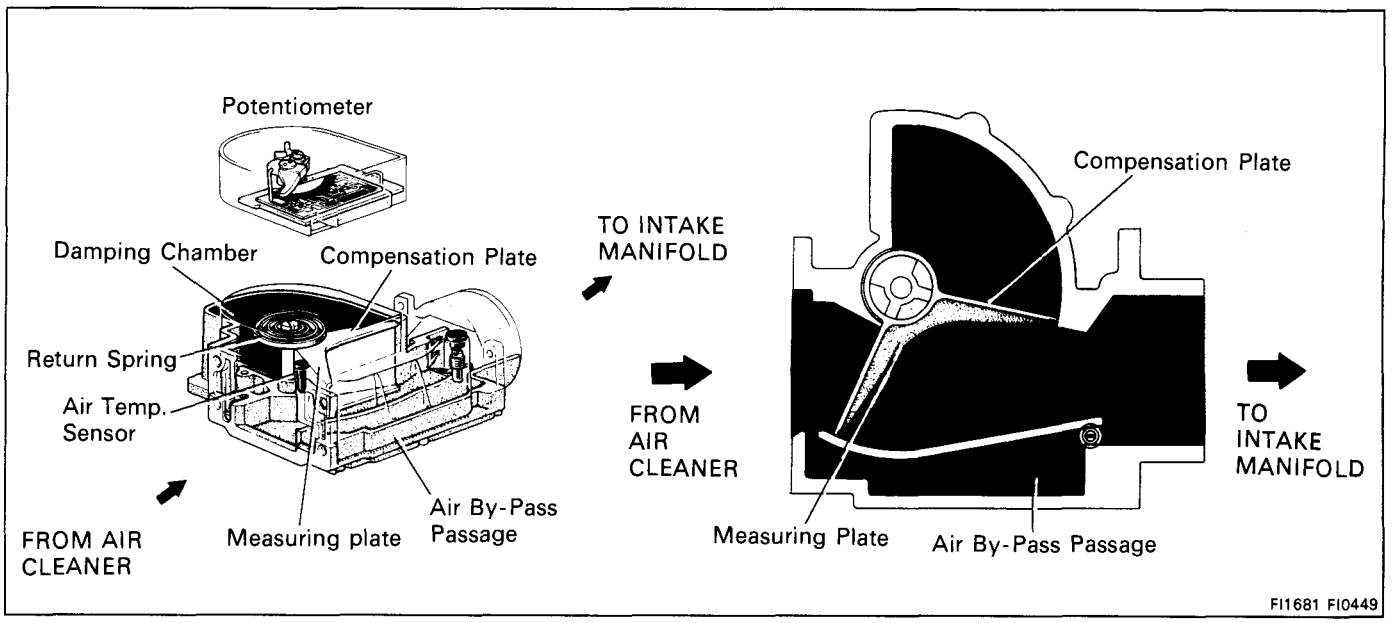

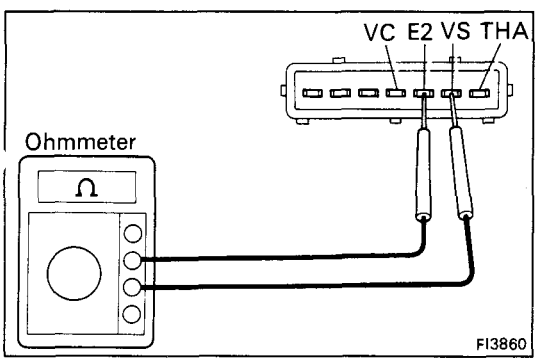

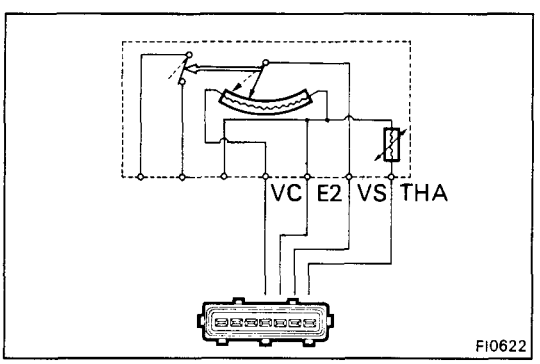

ON-VEHICLE INSPECTION

1. **INSPECT RESISTANCE OF AIR FLOW METER**
   (a) Disconnect the air flow meter connector.
   (b) Using an ohmmeter, measure the resistance between each terminals.

Between terminals	Resistance	Temperature
VS – E2	200 – 600 Ω	–
VC – E2	200 – 400 Ω	–
THA – E2	10 – 20 kΩ	–20°C (–4°F)
	4 – 7 kΩ	0°C (32°F)
	2 – 3 kΩ	20°C (68°F)
	0.9 – 1.3 kΩ	40°C (104°F)
	0.4 – 0.7 kΩ	60°C (140°F)

If the resistance is not as specifield, replace the air flow meter.

   (c) Reconnect the air flow meter connector.

REMOVAL OF AIR FLOW METER

1. **DISCONNECT CABLE FROM NEGATIVE TERMINAL OF BATTERY**

   CAUTION: Work must be started after approx. 20 seconds or longer from the time the ignition switch is turned to the "LOCK" position and the negative (–) terminal cable is disconnected from the battery.

2. **REMOVE LH ENGINE HOOD SIDE PANEL**

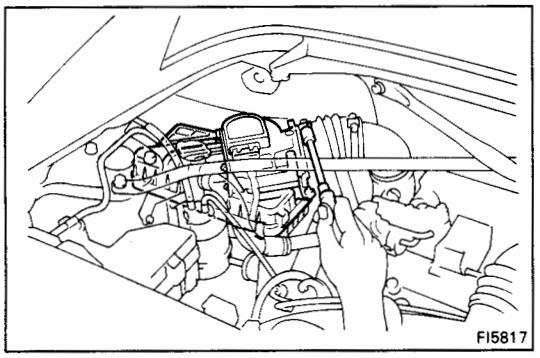

3. **DISCONNECT AIR FLOW METER CONNECTOR**

4. **DISCONNECT AIR CLEANER HOSE FROM AIR FLOW METER**

5. **REMOVE AIR CLEANER CAP AND AIR FLOW METER ASSEMBLY**

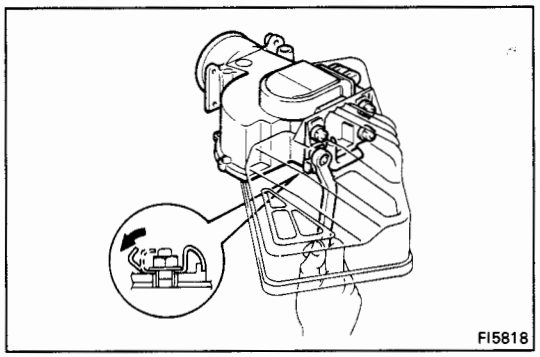

6. **REMOVE AIR FLOW METER FROM AIR CLEANER CAP**
   (a) Pry off the lock plate.
   (b) Remove the bolt, four nuts, air flow meter and gasket.

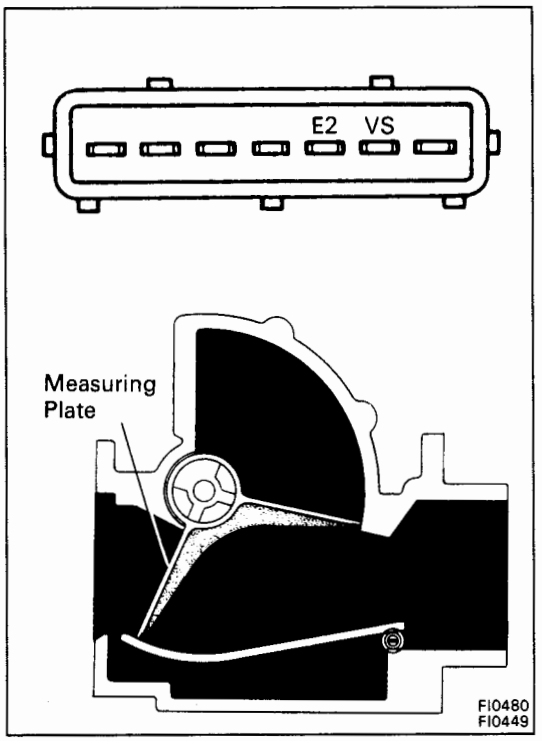

INSPECTION OF AIR FLOW METER

INSPECT AIR FLOW METER

Using an ohmmeter, measure the resistance between terminals VS and E2 by moving the measuring plate.

Resistance: 200 – 600 Ω at fully closed
20 – 1,200 Ω at fully open

HINT: Resistance will change in a wave pattern as the measuring plate slowly opens.

If the resistance is not as specifield, replace the air flow meter.

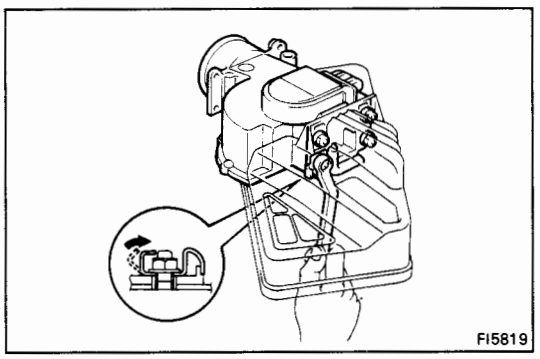

INSTALLATION OF AIR FLOW METER

1. **INSTALL AIR FLOW METER FROM AIR CLEANER CAP**
   (a) Install a new gasket and the air flow meter with the bolt and four nuts.
   (b) Pry the lock plate.

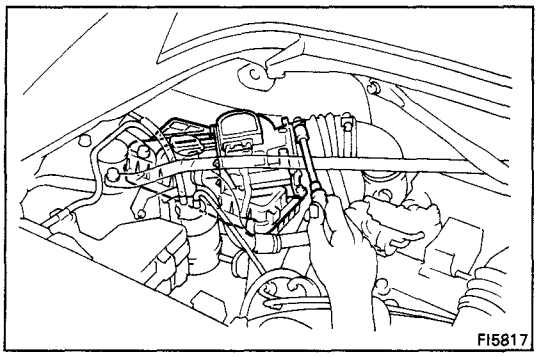

2. **INSTALL AIR CLEANER CAP AND AIR FLOW METER ASSEMBLY**
3. **CONNECT AIR CLEANER HOSE TO AIR FLOW METER**
4. **CONNECT AIR FLOW METER CONNECTOR**
5. **INSTALL LH ENGINE HOOD SIDE PANEL**
6. **CONNECT CABLE FROM NEGATIVE TERMINAL OF BATTERY**

Throttle Body (3S-GTE)

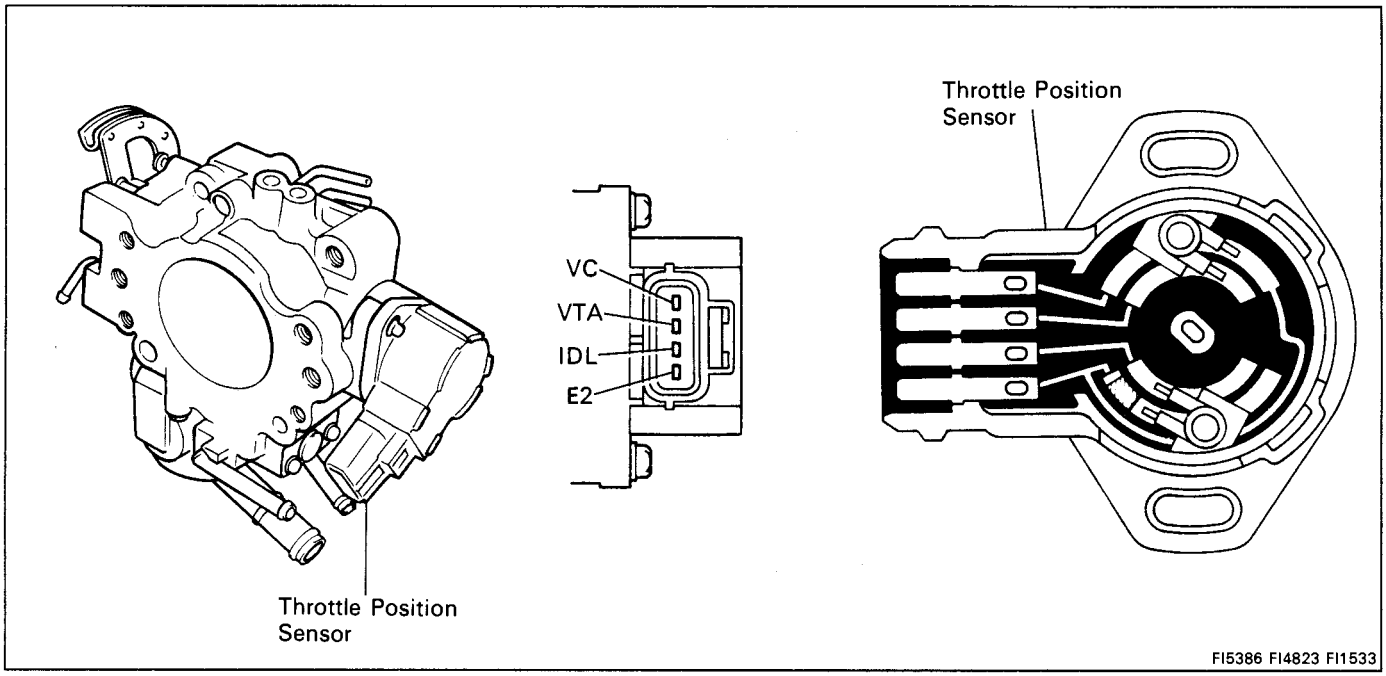

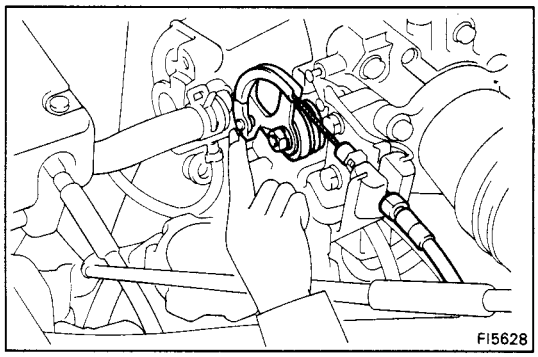

ON-VEHICLE INSPECTION

1. INSPECT THROTTLE BODY

(a) Check that the throttle linkage moves smoothly.

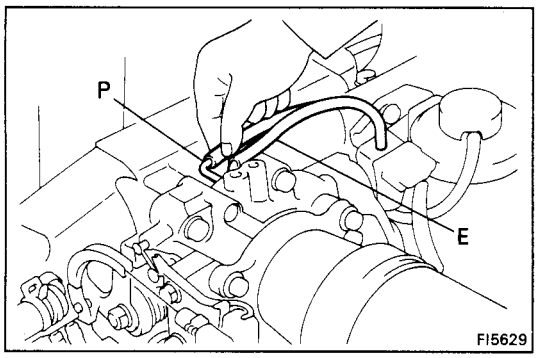

(b) Check the vacuum at each port.
- Start the engine.
- Check the vacuum with your finger.

Port No.	At idling	Other than idling
E	No vacuum	Vacuum
P	No vacuum	Vacuum

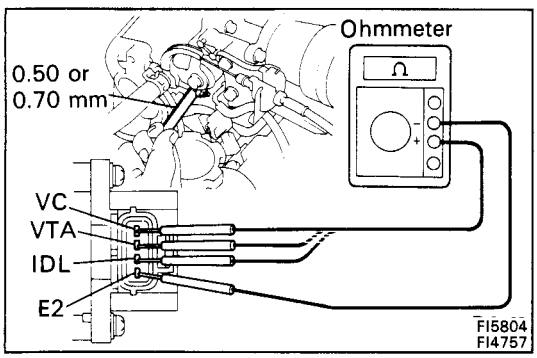

2. INSPECT THROTTLE POSITION SENSOR

(a) Disconnect the sensor connector.

(b) Insert a feeler gauge between the throttle stop screw and stop lever.

(c) Using an ohmmeter, measure the resistance between each terminal.

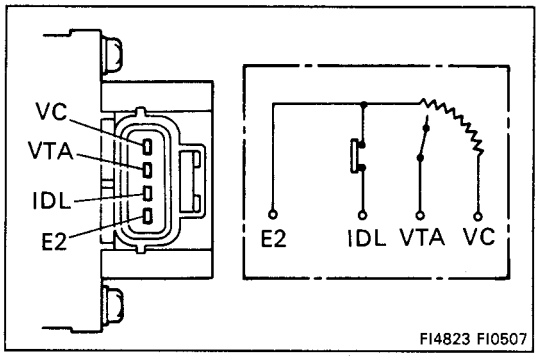

Clearance between Lever and stop screw	Between terminals	Resistance
0 mm (0 in.)	VTA – E2	0.2 – 0.8 kΩ
0.50 mm (0.020 in.)	IDL – E2	2.3 kΩ or less
0.70 mm (0.028 in.)	IDL – E2	Infinity
Throttle valve fully opened	VTA – E2	3.3 – 10.3 kΩ
–	VC – E2	3 – 8.3 kΩ

(d) Reconnect the sensor connector.

REMOVAL OF THROTTLE BODY

1. **DISCONNECT CABLE FROM NEGATIVE TERMINAL OF BATTERY**

   CAUTION: Work must be started after approx. 20 seconds or longer from the time the ignition switch is turned to the "LOCK" position and the negative (–) terminal cable is disconnected from the battery.

2. **DRAIN ENGINE COOLANT (See page CO-6)**

3. **DISCONNECT ACCELERATOR CABLE FROM THROTTLE LINKAGE**

4. **REMOVE NO.1 AIR INTAKE CONNECTOR**

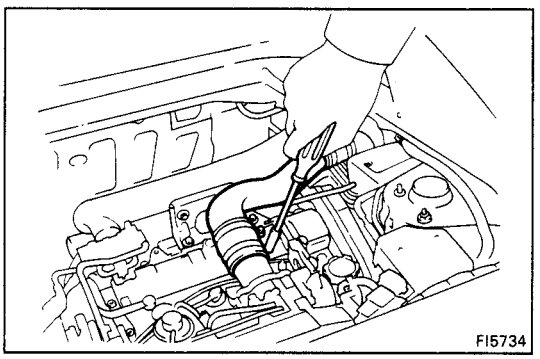

5. **REMOVE INTAKE AIR CONNECTOR**

   Remove the four bolts and air connector.

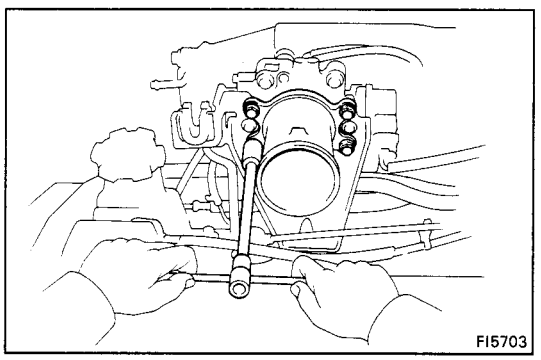

6. **REMOVE INTAKE AIR CONNECTOR STAY**

   Remove the four bolts, air connector stay and two spacers.

7. **DISCONNECT THROTTLE POSITION SENSOR CONNECTOR**

8. **DISCONNECT ISC VALVE CONNECTOR**

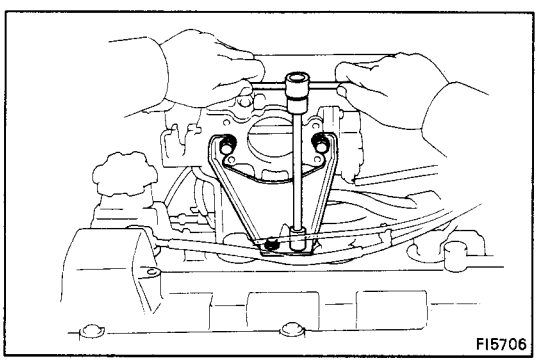

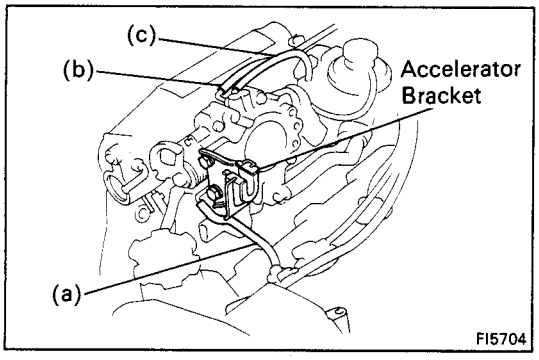

9. REMOVE ACCELERATOR BRACKET

10. DISCONNECT HOSES FROM THROTTLE BODY

(a) PCV hose from cylinder head cover

(b) Vacuum hose (from throttle body P port) from vacuum pipe

(c) Vacuum hose (from throttle body E port) from EGR VSV

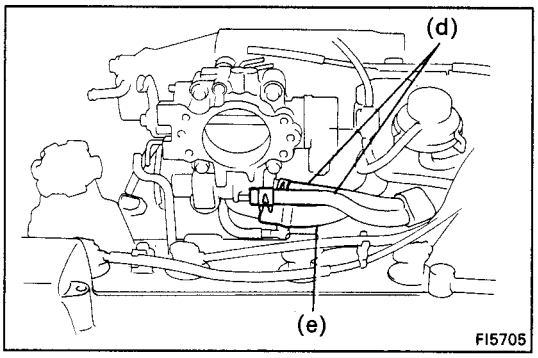

(d) Two water by-pass hoses from No.1 air tube

(e) Air hose from No.1 air tube

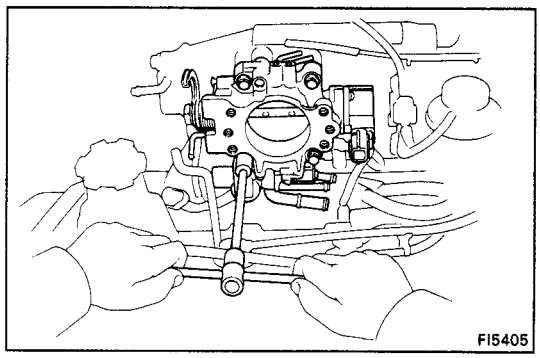

11. REMOVE THROTTLE BODY

Remove the four bolts, throttle body and gasket.

12. IF NECESSARY, REMOVE ISC VALVE FROM THROTTLE BODY (See step 2 on page FI-149)

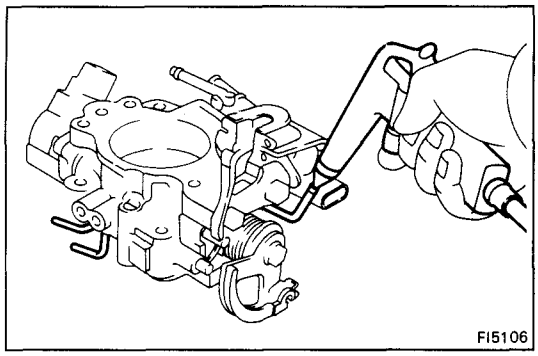

INSPECTION OF THROTTLE BODY

1. CLEAN THROTTLE BODY

(a) Using a soft brush and carburetor cleaner, clean the cast parts.

(b) Using compressed air, clean all the passages and apertures.

NOTICE: To prevent deterioration, do not clean the throttle position sensor.

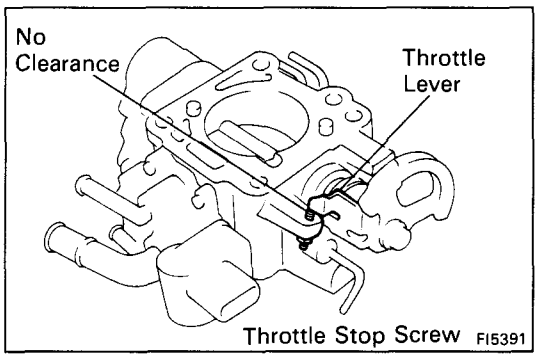

2. INSPECT THROTTLE VALVE

Check that there is no clearance between the throttle stop screw and throttle lever when the throttle valve is fully closed.

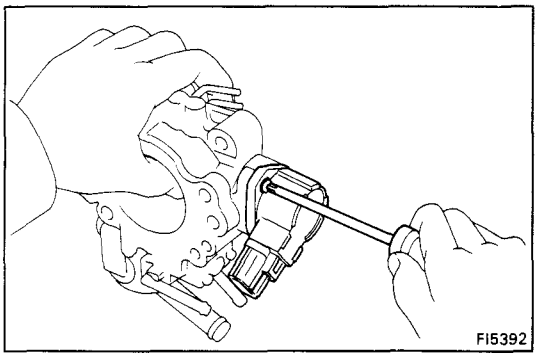

3. INSPECT THROTTLE POSITION SENSOR
(See step 2 on page FI-71)

4. IF NECESSARY, ADJUST THROTTLE POSITION SENSOR

(a) Loosen the two set screws of the sensor.

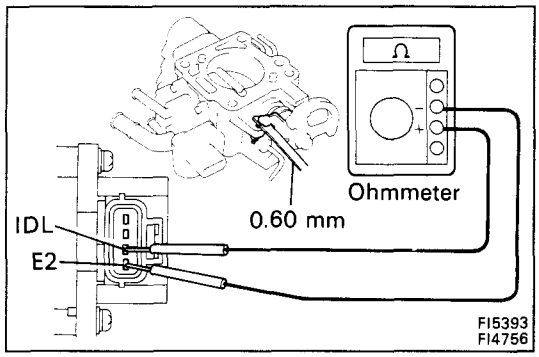

(b) Insert a 0.60 mm (0.024 in.) feeler gauge, between the throttle stop screw and stop lever.

(c) Connect the test probe of an ohmmeter to the terminals IDL and E2 of the sensor.

(d) Gradually turn the sensor clockwise until the ohmmeter deflects, and secure it with the two set screws.

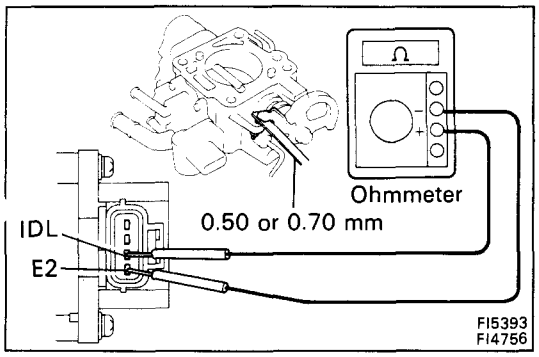

(e) Recheck the continuity between terminals IDL and E2.

Clearance between lever and stop screw	Continuity (IDL-E2)
0.50 mm (0.020 in.)	Continuity
0.70 mm (0.028 in.)	No continuity

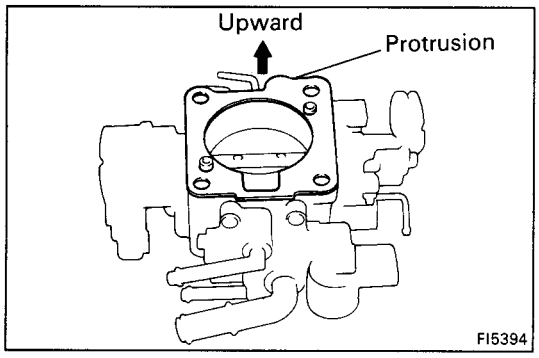

INSTALLATION OF THROTTLE BODY

1. INSTALL ISC VALVE TO THROTTLE BODY
(See step 1 on page FI-150)

2. INSTALL THROTTLE BODY

(a) Place a new gasket on the throttle body, facing the protrusion upward.

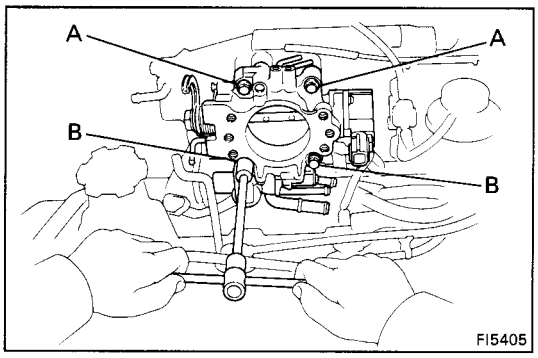

(b) Install the throttle body with the four bolts.

Torque: 195 kg-cm (14 ft-lb, 19 N·m)

HINT: Each bolt is indicated in the figure.

Bolt length: A 45 mm (1.77 in.)
B 70 mm (2.76 in.)

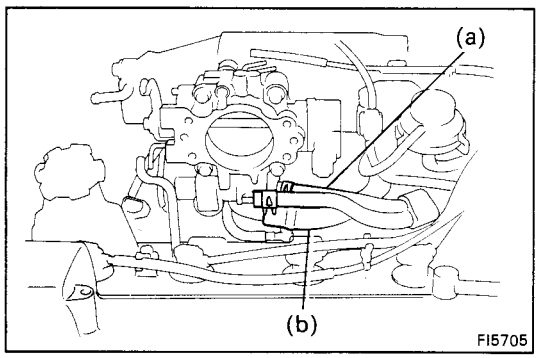

3. CONNECT HOSES TO THROTTLE BODY

(a) Two water by-pass hoses from No.1 air tube

(b) Air hose from No.1 air tube

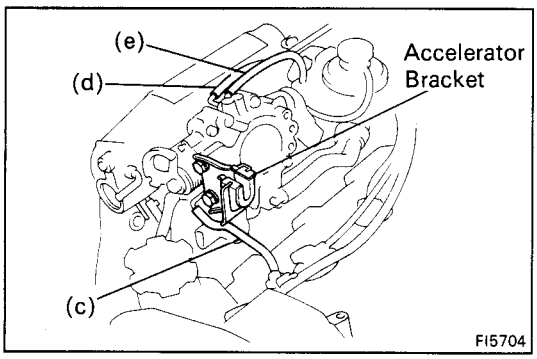

(c) PCV hose from cylinder head cover

(d) Vacuum hose (from throttle body P port) from vacuum pipe

(e) Vacuum hose (from throttle body E port) from EGR VSV

4. INSTALL ACCELERATOR BRACKET

5. CONNECT ISC VALVE CONNECTOR

6. CONNECT THROTTLE POSITION SENSOR CONNECTOR

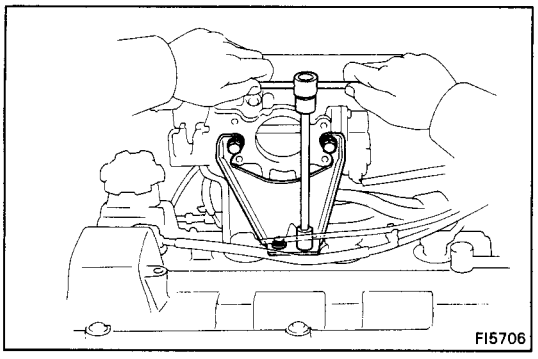

7. INSTALL INTAKE AIR CONNECTOR STAY

Install the two spacers and air connector stay with four bolts.

Torque:

10 mm head bolt	**80 kg-cm (69 in.-lb, 7.8 N·m)**
12 mm head bolt	**195 kg-cm (14 ft-lb, 19 N·m)**

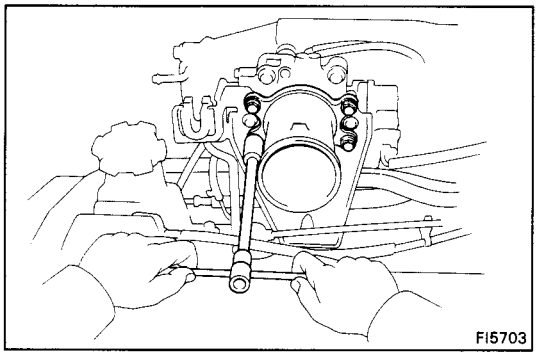

8. INSTALL INTAKE AIR CONNECTOR

Install the air connector with the four bolts.

Torque: 195 kg-cm (14 ft-lb, 19 N·m)

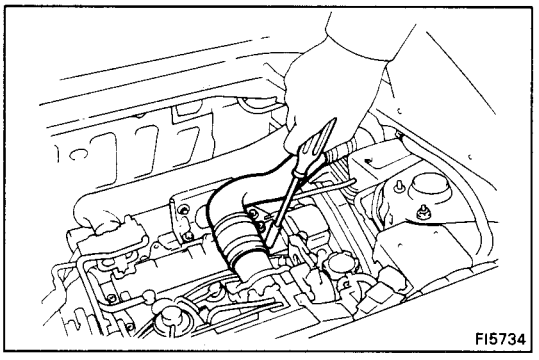

9. INSTALL NO.1 AIR INTAKE CONNECTOR

10. CONNECT ACCELERATOR CABLE, AND ADJUST IT

11. FILL WITH ENGINE COOLANT (See page CO-7)

12. CONNECT CABLE TO NEGATIVE TERMINAL OF BATTERY

Throttle Body (5S-FE)

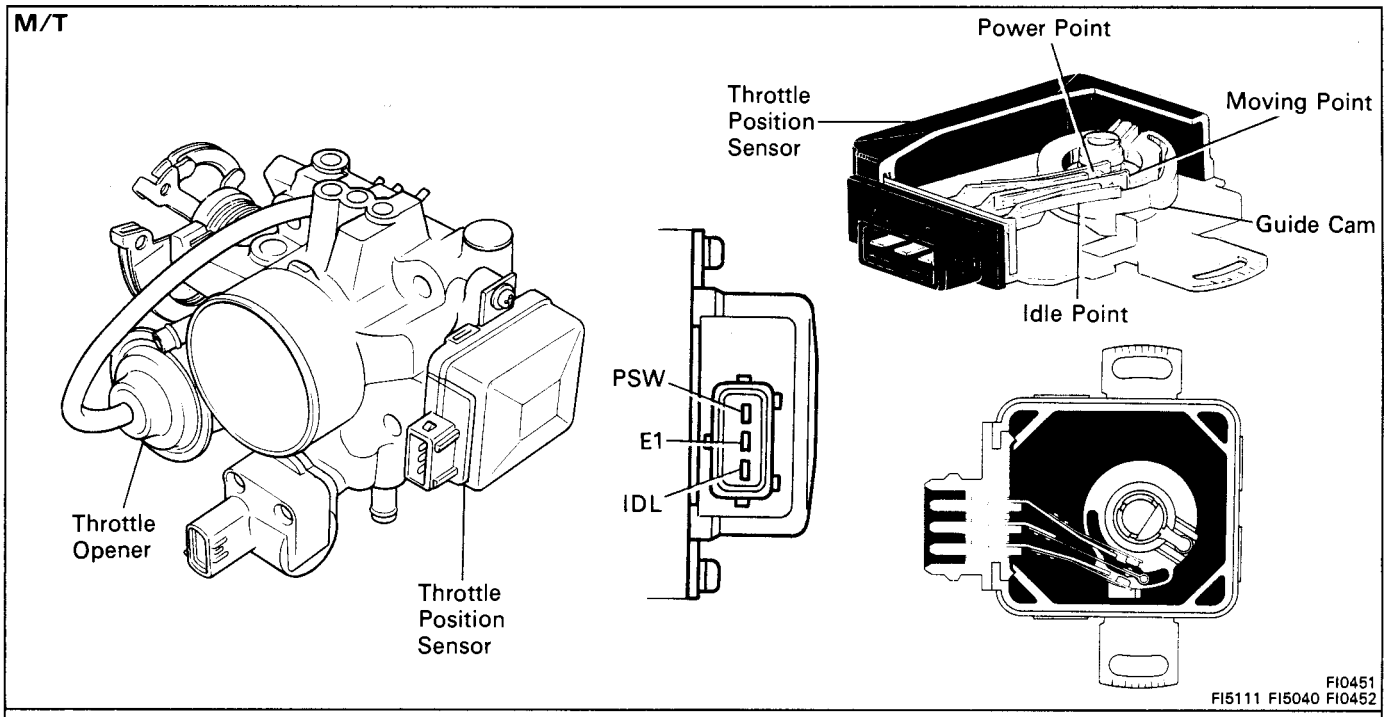

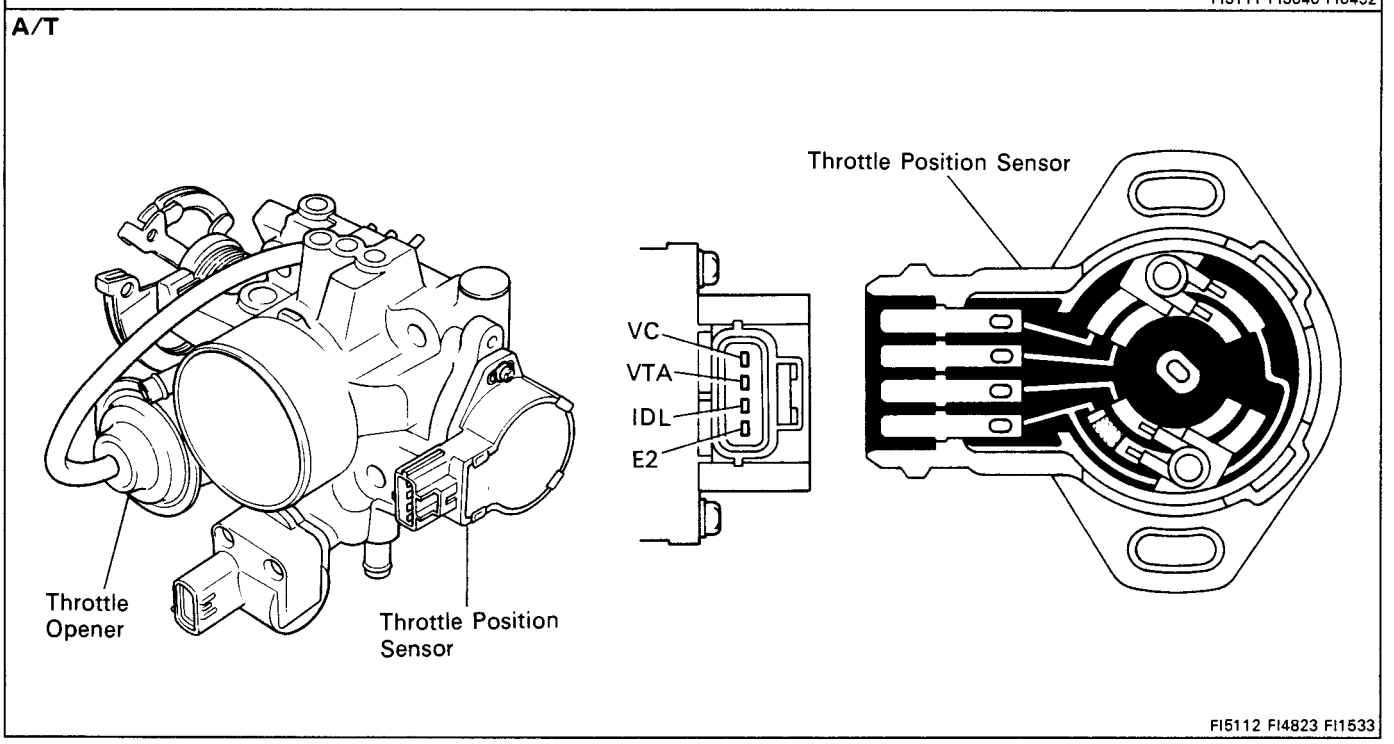

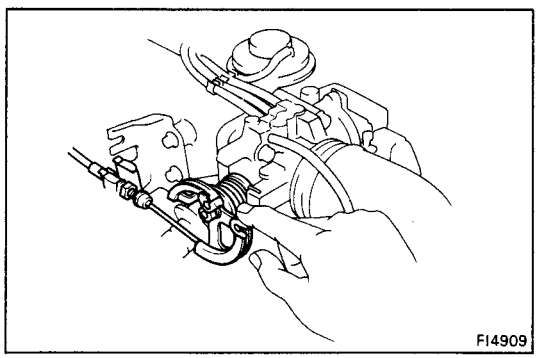

ON-VEHICLE INSPECTION

1. INSPECT THROTTLE BODY

(a) Check that the throttle linkage moves smoothly.

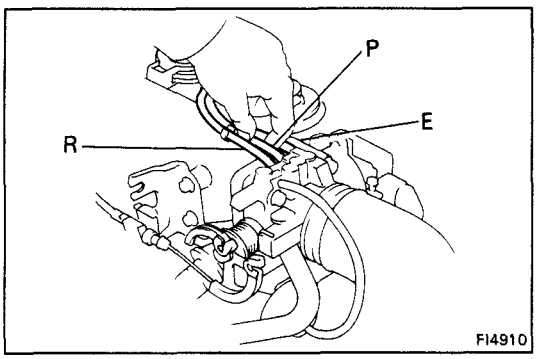

(b) Check the vacuum at each port.
- Start the engine.
- Check the vacuum with your finger.

Port name	At idling	Other than idling
P	No vacuum	Vacuum
E	No vacuum	Vacuum
R	No vacuum	No vacuum

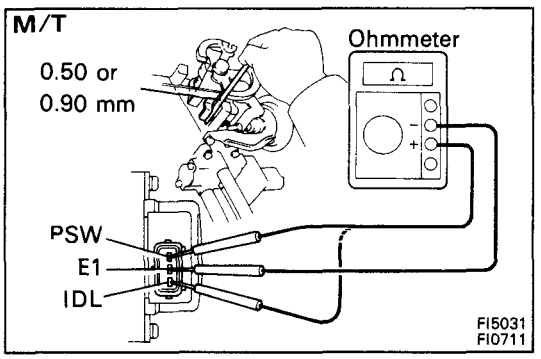

2. (M/T)
INSPECT THROTTLE POSITION SENSOR

(a) Apply vacuum to the throttle opener.

(b) Disconnect the sensor connector.

(c) Insert a feeler gauge between the throttle stop screw and stop lever.

(d) Using an ohmmeter, measure the resistance between each terminal.

Clearance between lever and stop screw	Continuity between terminals	
	IDL – E1	PSW – E1
0.50 mm (0.020 in.)	Continuity	No continuity
0.90 mm (0.035 in.)	No continuity	No continuity
Throttle valve fully opened	No continuity	Continuity

(e) Reconnect the sensor connector.

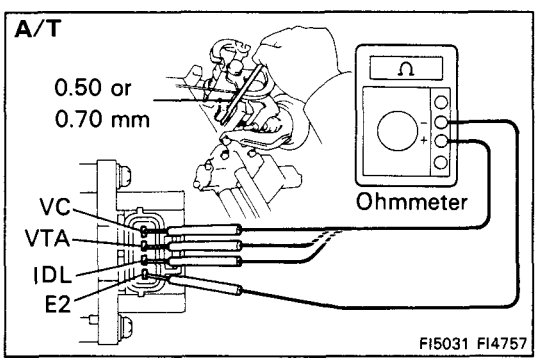

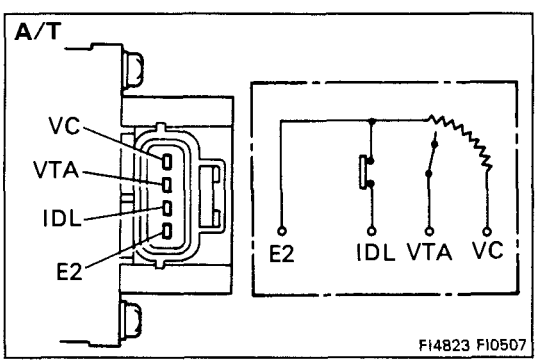

3. (A/T)
INSPECT THROTTLE POSITION SENSOR

(a) Apply vacuum to the throttle opener.

(b) Disconnect the sensor connector.

(c) Insert a feeler gauge between the throttle stop screw and stop lever.

(d) Using an ohmmeter, measure the resistance between each terminal.

Clearance between lever and stop screw	Between terminals	Resistance
0 mm (0 in.)	VTA – E2	0.2 – 0.8 kΩ
0.50 mm (0.020 in.)	IDL – E2	2.3 kΩ or less
0.70 mm (0.028 in.)	IDL – E2	Infinity
Throttle valve fully opened	VTA – E2	3.3 – 10 kΩ
–	VC – E2	3 – 7 kΩ

(e) Reconnect the sensor connector.

4. INSPECT THROTTLE OPENER

A. Warm up engine

Allow the engine to warm up to normal operating temperature.

B. Check idle speed

Idle speed: 700 ± 50 rpm USA M/T
700 ± 50 rpm USA A/T
850 ± 50 rpm CANADA M/T
750 ± 50 rpm CANADA A/T

C. Check and adjust throttle opener setting speed

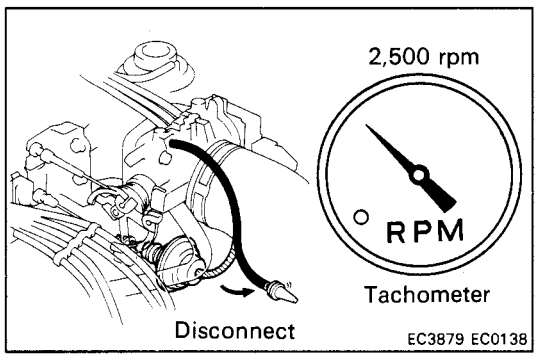

(a) Disconnect the vacuum hose from the throttle opener, and plug the hose end.

(b) Maintain the engine at 2,500 rpm.

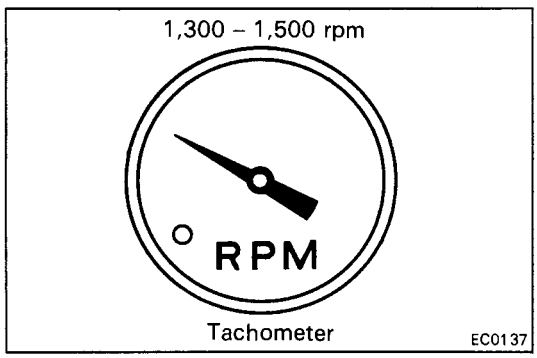

(c) Release the throttle valve.

(d) Check that the throttle opener is set.

Throttle opener setting speed:
1,300 – 1,500 rpm (w/ Cooling fan OFF)

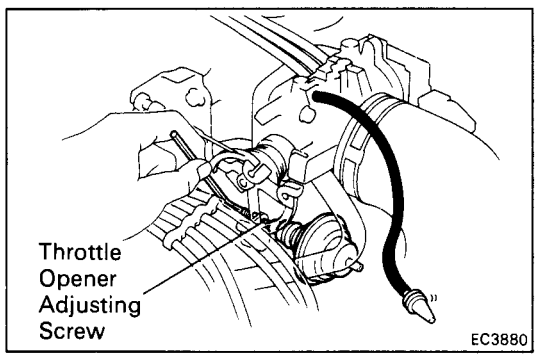

(e) Using a hexagon wrench, adjust the throttle opener setting by turning the throttle opener adjusting screw.

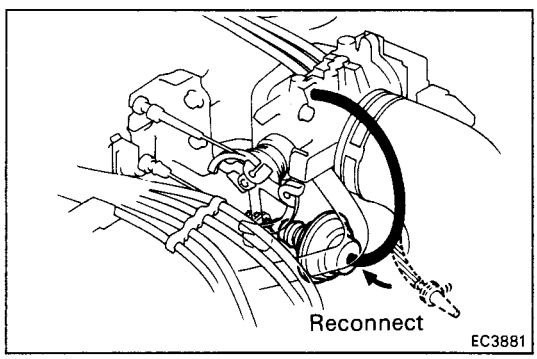

(f) Reconnect the vacuum hose to the throttle opener.

REMOVAL OF THROTTLE BODY

1. **DISCONNECT CABLE FROM NEGATIVE TERMINAL OF BATTERY**

   CAUTION: Work must be started after approx. 20 seconds or longer from the time the ignition switch is turned to the "LOCK" position and the negative (–) terminal cable is disconnected from the battery.

2. **REMOVE LH ENGINE HOOD SIDE PANEL**

3. **DRAIN ENGINE COOLANT (See page CO-6)**

4. **(A/T)**
   DISCONNECT THROTTLE CABLE FROM THROTTLE LINKAGE

5. **DISCONNECT ACCELERATOR CABLE FROM THROTTLE LINKAGE**

6. **REMOVE AIR CLEANER**
   (See step 9 on page EM-182)

7. **DISCONNECT THROTTLE POSITION SENSOR CONNECTOR**

8. **DISCONNECT ISC VALVE CONNECTOR**

9. **DISCONNECT HOSES FROM THROTTLE BODY**
   (a) PCV hose
   (b) Two vacuum hoses from EGR vacuum modulator
   (c) Vacuum hose from EVAP VSV

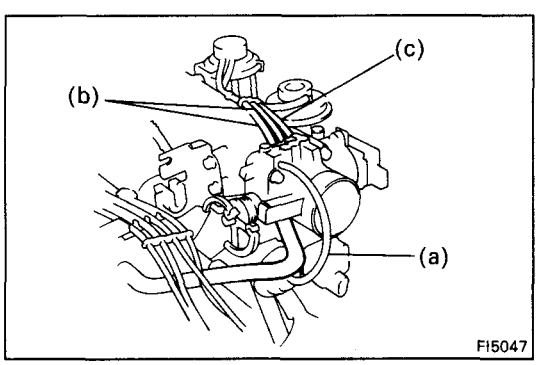

   (d) Water by-pass hose from water outlet
   (e) Water by-pass hose from water by-pass pipe
   (f) Air hose from A/C VSV

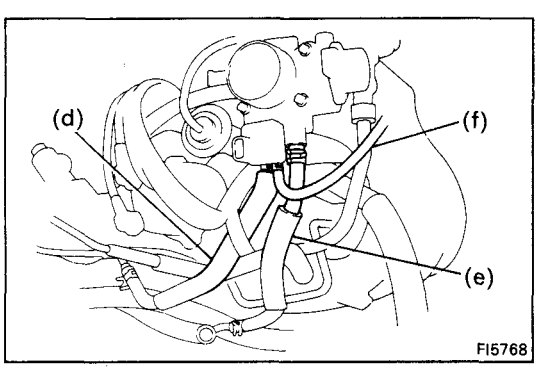

10. **REMOVE THROTTLE BODY**
    Remove the four bolts, throttle body and gasket.

11. **IF NECESSARY, REMOVE ISC VALVE FROM THROTTLE BODY**
    (See step 2 on page FI-152)

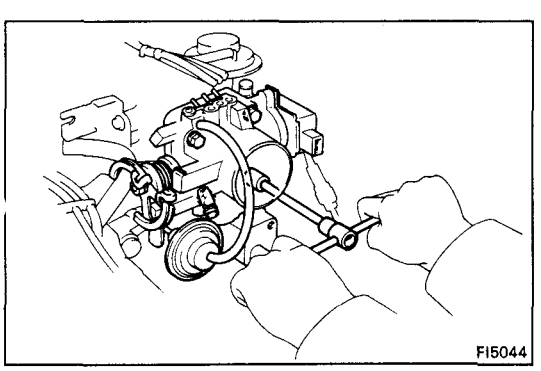

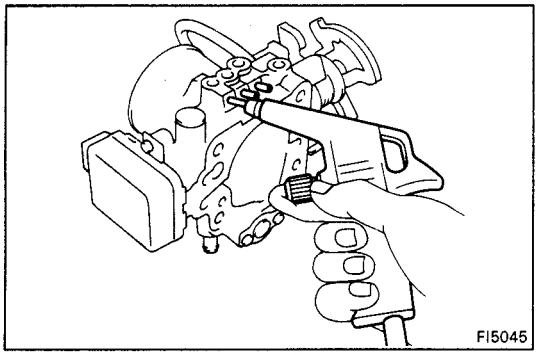

INSPECTION OF THROTTLE BODY

1. CLEAN THROTTLE BODY

(a) Using a soft brush and carburetor cleaner, clean the cast parts.

(b) Using compressed air, clean all the passages and apertures.

NOTICE: To prevent deterioration, do not clean the throttle position sensor.

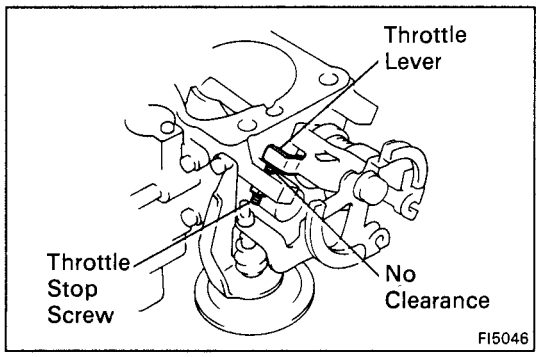

2. INSPECT THROTTLE VALVE

(a) Apply vacuum hose to the throttle opener.

(b) Check that there is no clearance between the throttle stop screw and throttle lever when the throttle valve is fully closed.

3. (M/T)
INSPECT THROTTLE POSITION SENSOR

(a) Make an angle gauge as shown in the figure.

(b) Apply vacuum hose to the throttle opener.

(c) Set the throttle valve opening to 71° or 81° from the vertical position (incl. throttle valve fully closed angle 6°).

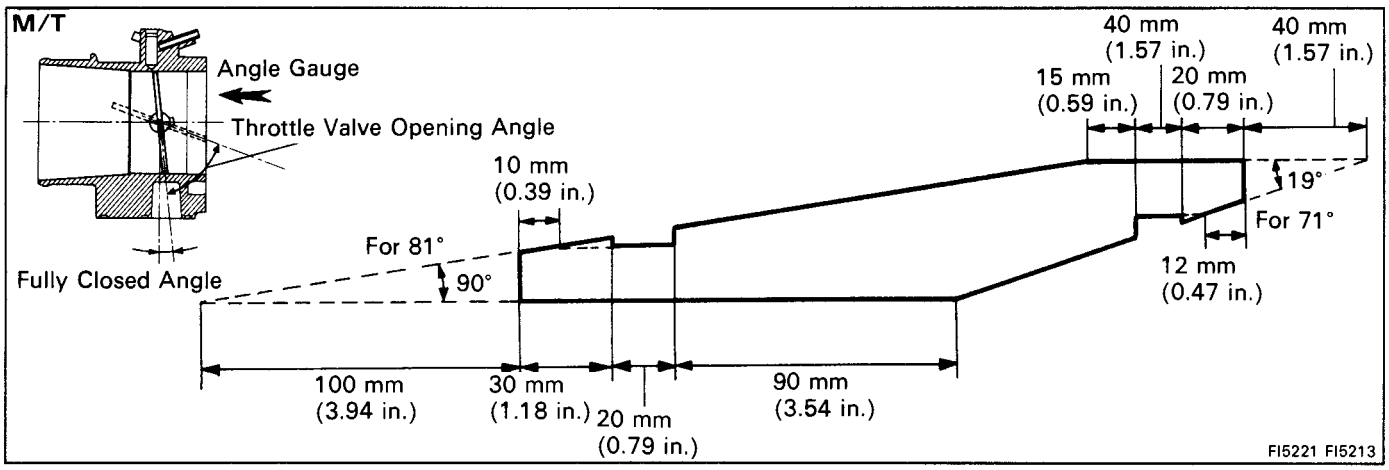

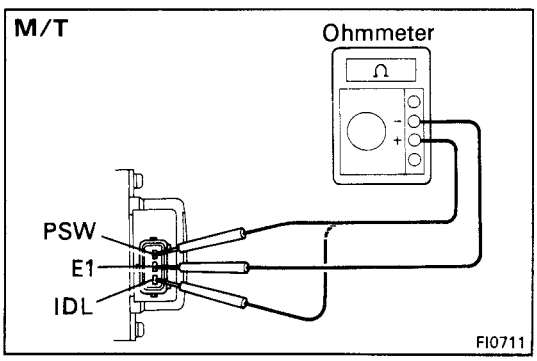

(d) Using an ohmmeter, check the continuity between each terminal.

Throttle valve opening angle	Continuity	
	IDL – E1	PSW – E1
71° from vertical	No continuity	No continuity
81° from vertical	No continuity	Continuity
Less than 7.5° from vertical	Continuity	No continuity

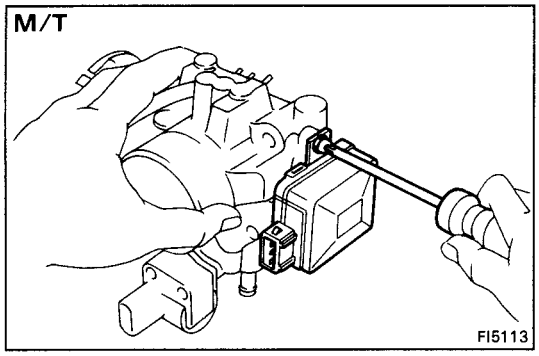

4. **(M/T)**
IF NECESSARY, ADJUST THROTTLE POSITION SENSOR
   (a) Loosen the two set screws of the sensor.

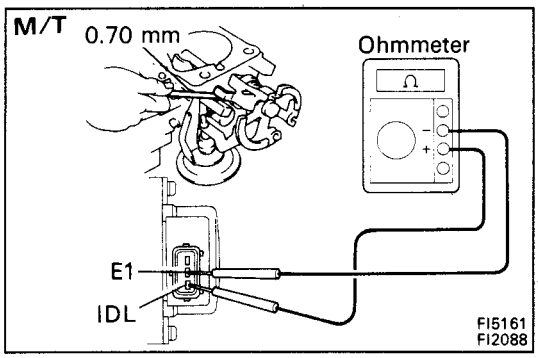

   (b) Apply vacuum hose to the throttle opener.
   (c) Insert a 0.70 mm (0.028 in.) feeler gauge, between the throttle stop screw and stop lever.
   (d) Connect the test probe of an ohmmeter to the terminals IDL and E1 of the sensor.
   (e) Gradually turn the sensor clockwise until the ohmmeter deflects, and secure it with the two set screws.

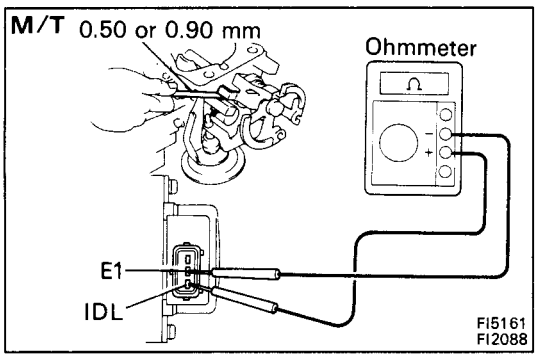

   (f) Recheck the continuity between terminals IDL and E1.

Clearance between lever and stop screw	Continuity (IDL – E1)
0.50 mm (0.020 in.)	Continuity
0.90 mm (0.035 in.)	No continuity

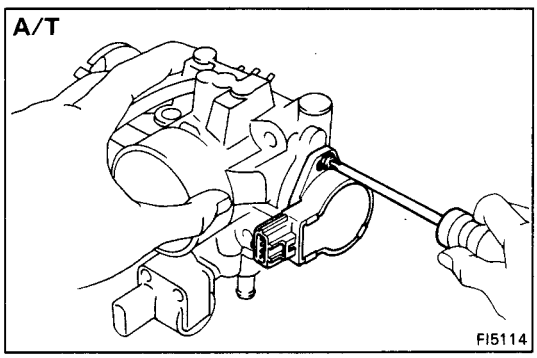

5. **(A/T)**
INSPECT THROTTLE POSITION SENSOR
(See step 3 on page FI-141)

6. **(A/T)**
IF NECESSARY, ADJUST THROTTLE POSITION SENSOR
   (a) Loosen the two set screws of the sensor.

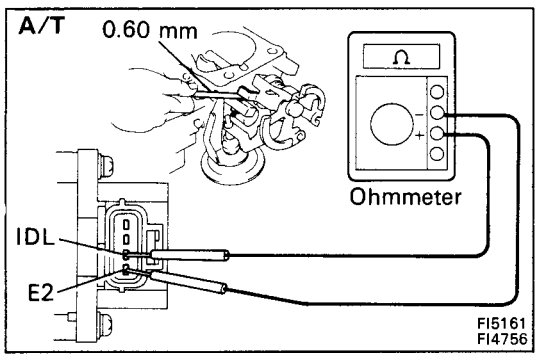

   (b) Apply vacuum hose to the throttle opener.
   (c) Insert a 0.60 mm (0.024 in.) feeler gauge, between the throttle stop screw and stop lever.
   (d) Connect the test probe of an ohmmeter to the terminals IDL and E2 of the sensor.
   (e) Gradually turn the sensor clockwise until the ohmmeter deflects, and secure it with the two set screws.

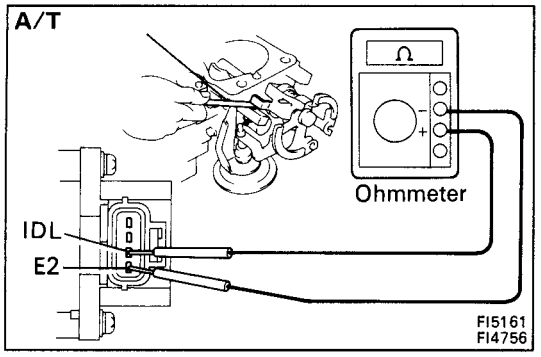

(f) Recheck the continuity between terminals IDL and E2.

Clearance between lever and stop screw	Continuity (IDL – E2)
0.50 mm (0.020 in.)	Continuity
0.70 mm (0.028 in.)	No continuity

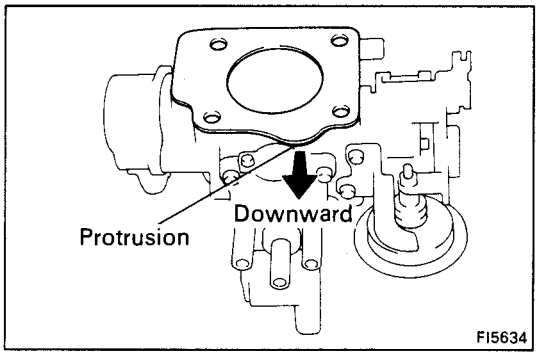

INSTALLATION OF THROTTLE BODY

1. INSTALL ISC VALVE TO THROTTLE BODY
(See step 1 on page FI-153)

2. INSTALL THROTTLE BODY

(a) Place a new gasket on the throttle body, facing the protrusion downward.

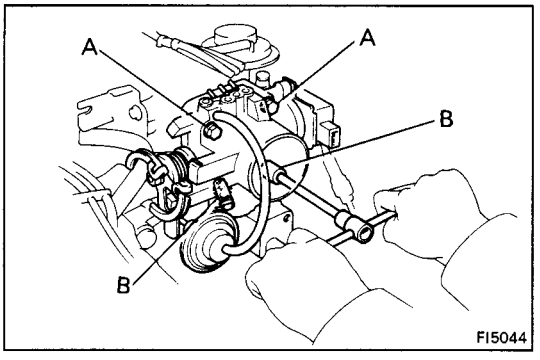

(b) Install the throttle body with the four bolts.

Torque: 195 kg-cm (14 ft-lb, 19 N!.!m)

HINT: Each bolt is indicated in the figure.

Bolt length: A 45 mm (1.77 in.)
B 55 mm (2.17 in.)

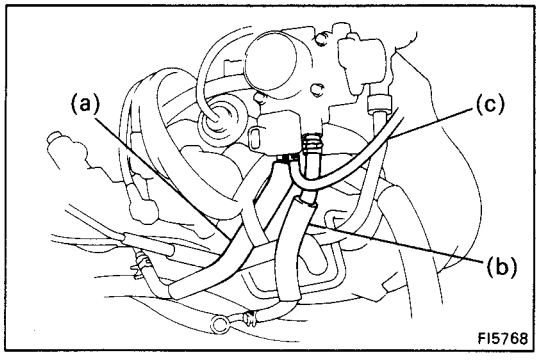

3. CONNECT HOSES TO THROTTLE BODY

(a) Water by-pass hose from water outlet
(b) Water by-pass hose from water by-pass pipe
(c) Air hose from A/C VSV

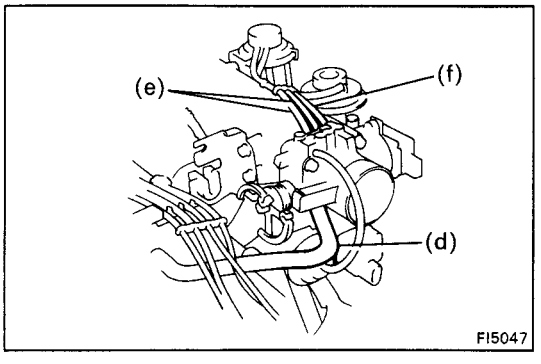

(d) PCV hose
(e) Two vacuum hoses from EGR vacuum modulator
(f) Vacuum hose from EGR VSV

4. **CONNECT ISC VALVE CONNECTOR**
5. **CONNECT THROTTLE POSITION SENSOR CONNECTOR**
6. **INSTALL AIR CLEANER**
   (See step 35 on page EM-226)
7. **CONNECT ACCELERATOR CABLE, AND ADJUST IT**
8. **(A/T)**
   CONNECT THROTTLE CABLE, AND ADJUST IT
9. **FILL WITH ENGINE COOLANT (See page CO-7)**
10. **INSTALL LH ENGINE HOOD SIDE PANEL**
11. **CONNECT CABLE TO NEGATIVE TERMINAL OF BATTERY**

Idle Speed Control (ISC) Valve (3S-GTE)

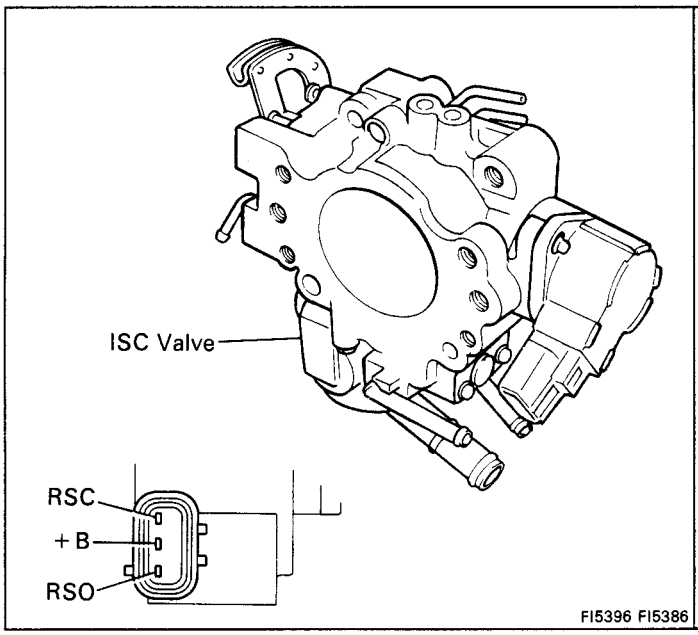

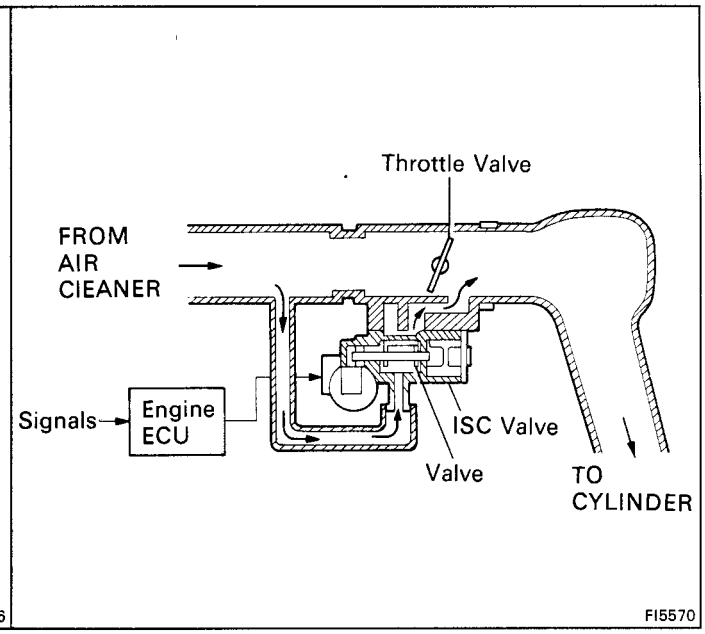

ON-VEHICLE INSPECTION

1. INSPECT ISC VALVE OPERATION

(a) Initial conditions:

- Engine at normal operating temperature
- Idle speed set correctly

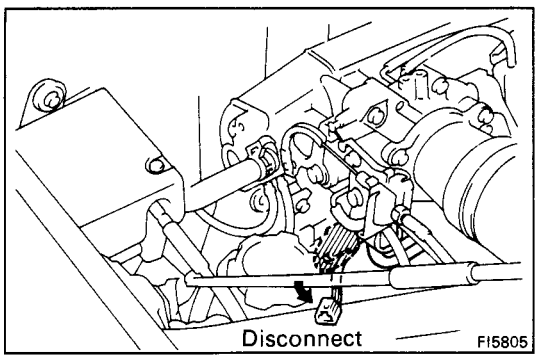

(b) Disconnect the ISC valve connector.

(c) Check the engine rpm.

Engine rpm: 1,000 rpm or more

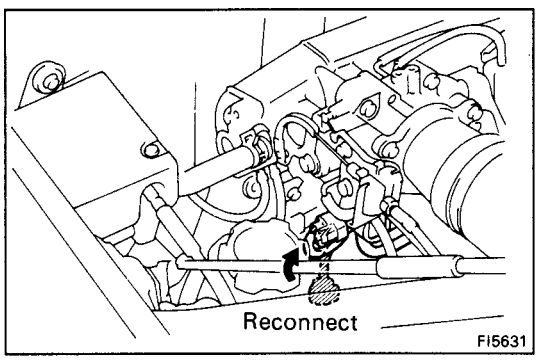

(d) Reconnect the ISC valve connector.

(e) Check that they return to the idle speed.

Idle speed: 800 ± 50 rpm

If the rpm operation is not as specified, check the ISC valve, wiring and ECU.

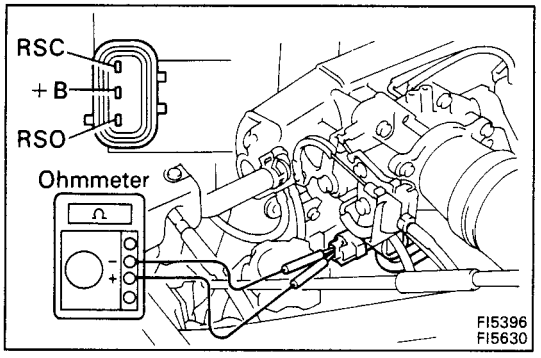

2. **INSPECT ISC VALVE RESISTANCE**
   (a) Disconnect the ISC valve connector.
   (b) Using an ohmmeter, measure the resistance between terminal +B and other terminals (RSC, RSO).
   Resistance: 17.7 – 23.9 Ω
   If resistance is not as specified, replace the ISC valve.
   (c) Reconnect the ISC valve connector.

REMOVAL OF ISC VALVE

1. **REMOVE THROTTLE BODY**
   (See steps 1 to 11 on pages FI-135 and 136)

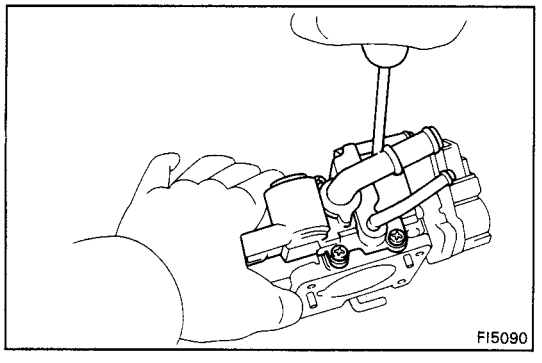

2. **REMOVE ISC VALVE**
   Remove the four screws, ISC valve and gasket.

INSPECTION OF ISC VALVE

INSPECT ISC VALVE OPERATION

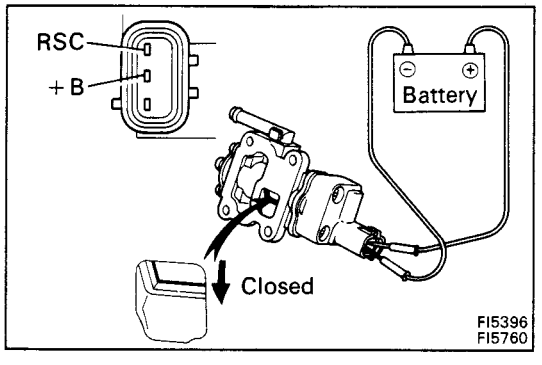

(a) Connect the positive (+) lead from the battery to terminal +B and negative (–) lead to terminal RSC, and check that the valve is closed.

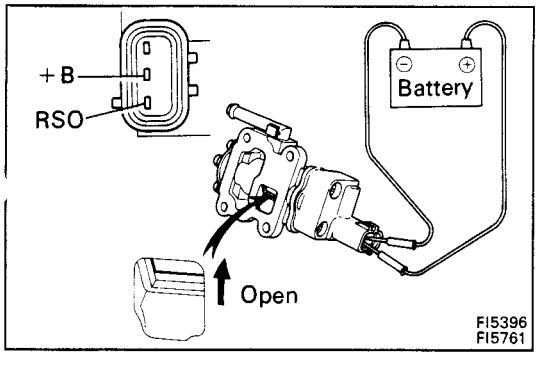

(b) Connect the positive (+) lead from the battery to terminal +B and negative (–) lead to terminal RSO, and check that the valve is open.

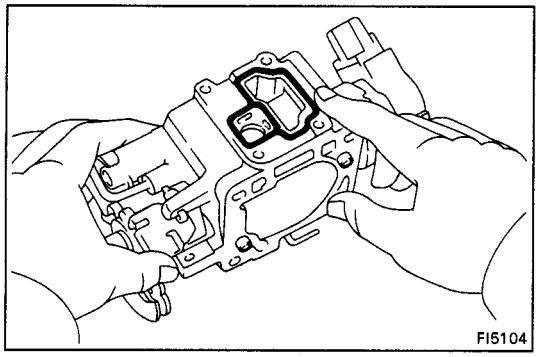

INSTALLATION OF ISC VALVE

1. **INSTALL ISC VALVE**

   (a) Place a new gasket on the throttle body.

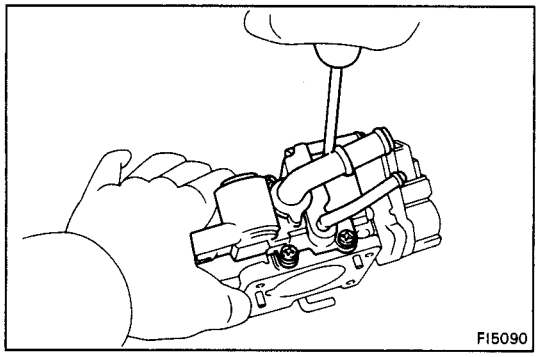

   (b) Install the ISC valve with the four screws.

2. **INSTALL THROTTLE BODY**
   (See steps 2 to 12 on pages FI-138 and 139)

Idle Speed Control (ISC) Valve (5S-FE)

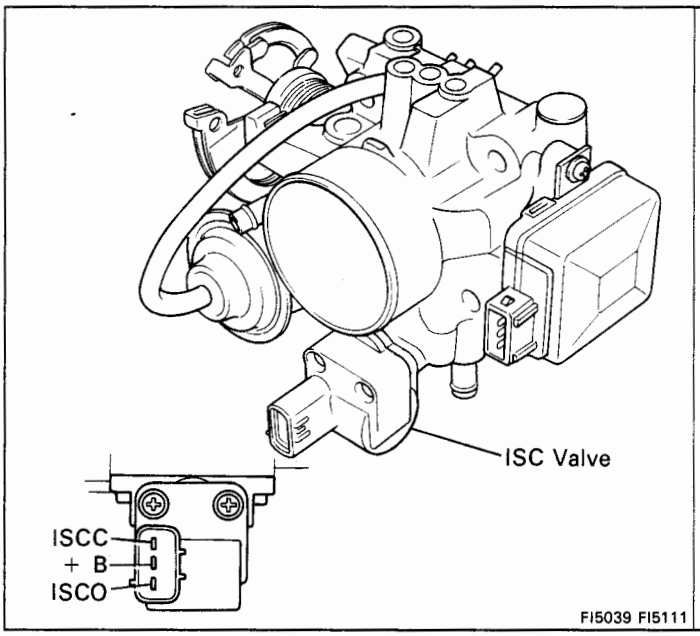

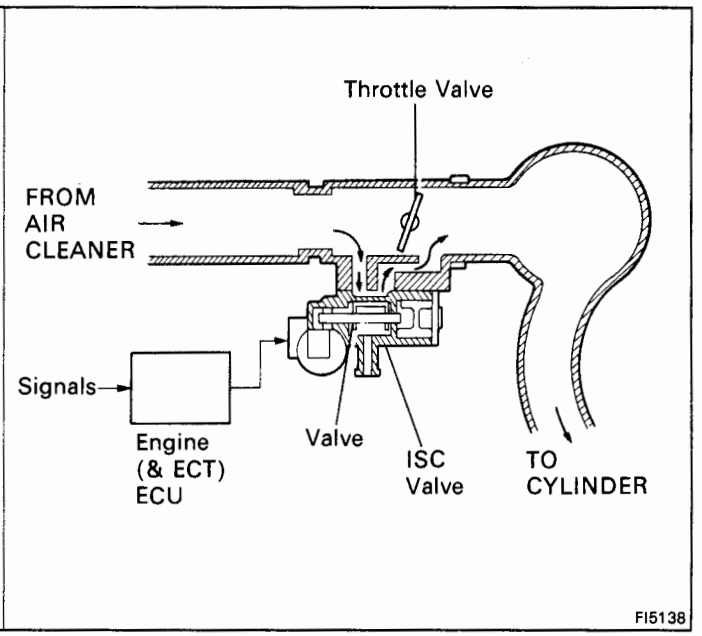

ON-VEHICLE INSPECTION

1. INSPECT ISC VALVE OPERATION

(a) Initial conditions:

- Engine at normal operating temperature
- Idle speed set correctly
- Transmission in neutral range

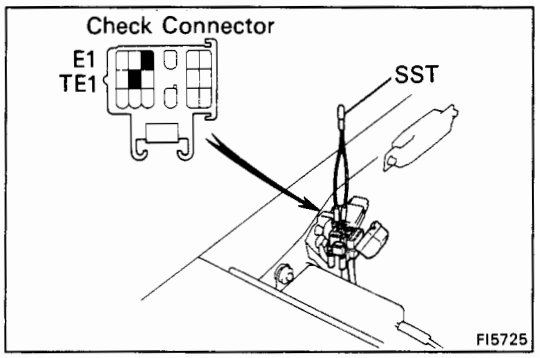

(b) Using SST, connect terminals TE1 and E1 of the check connector.

SST 09843-18020

(c) After engine rpm are kept at 1,000 – 1,300 rpm for 5 seconds, check that they return to idle speed.

If the rpm operation is not as specified, check the ISC valve, wiring and ECU.

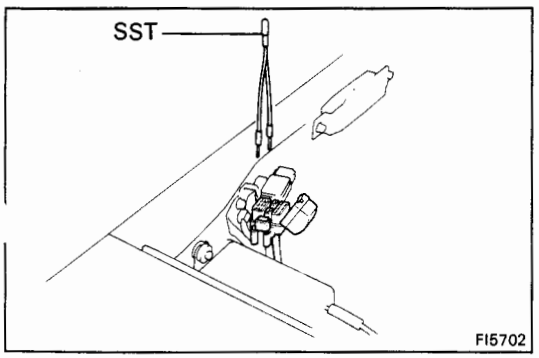

(d) Remove SST.

SST 09843-18020

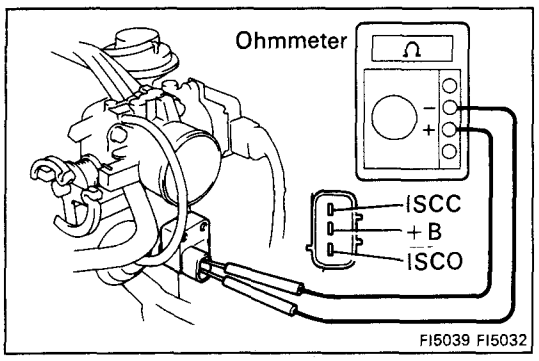

2. INSPECT ISC VALVE RESISTANCE

(a) Disconnect the ISC valve connector.

(b) Using an ohmmeter, measure the resistance between terminal +B and other terminals (ISCC, ISCO).

Resistance: 19.3 – 22.3 Ω

If resistance is not as specified, replace the ISC valve.

(c) Reconnect the ISC valve connector.

REMOVAL OF ISC VALVE

1. REMOVE THROTTLE BODY
(See steps 1 to 10 on page FI-143)

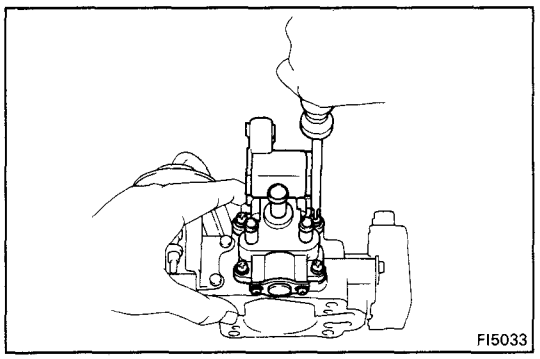

2. REMOVE ISC VALVE

Remove the four screws, ISC valve and gasket.

INSPECTION OF ISC VALVE

INSPECT ISC VALVE OPERATION

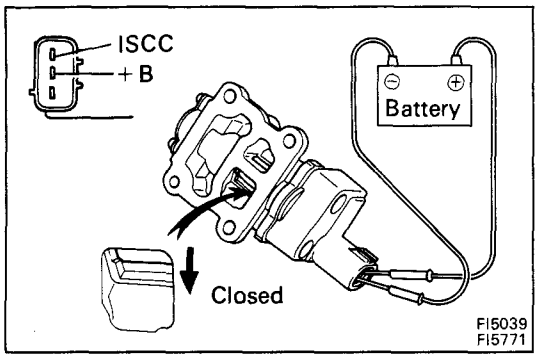

(a) Connect the positive (+) lead from the battery to terminal +B and negative (–) lead to terminal ISCC, and check that the valve is closed.

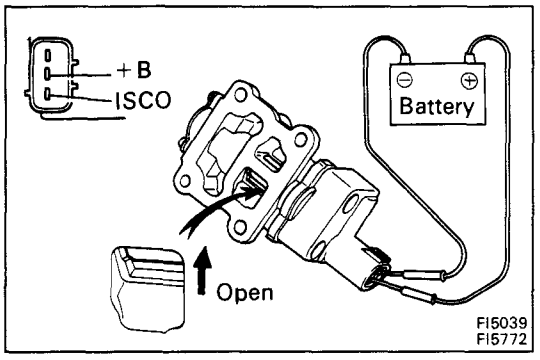

(b) Connect the positive (+) lead from the battery to terminal +B and negative (–) lead to terminal ISCO, and check that the valve is open.

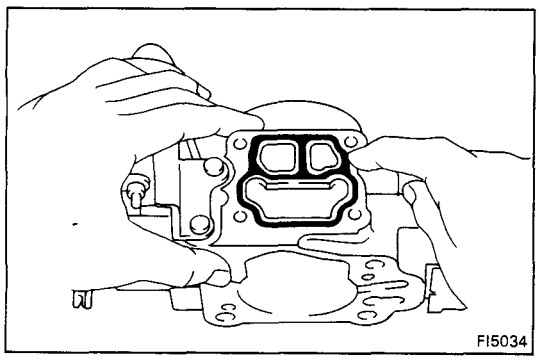

INSTALLATION OF ISC VALVE

1. **INSTALL ISC VALVE**

   (a) Place a new gasket on the throttle body.

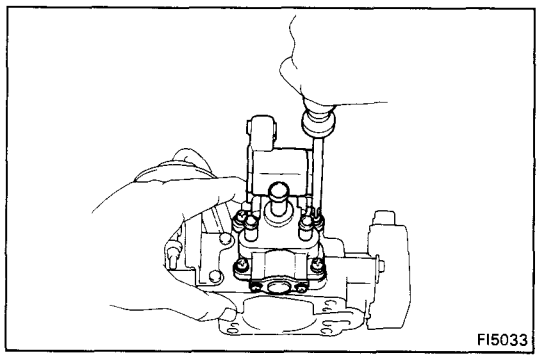

   (b) Install the ISC valve with the four screws.

2. **INSTALL THROTTLE BODY**
   (See steps 2 to 11 on pages FI-146 and 147)

ELECTRONIC CONTROL SYSTEM
Location of Electronic Control Parts

3S-GTE

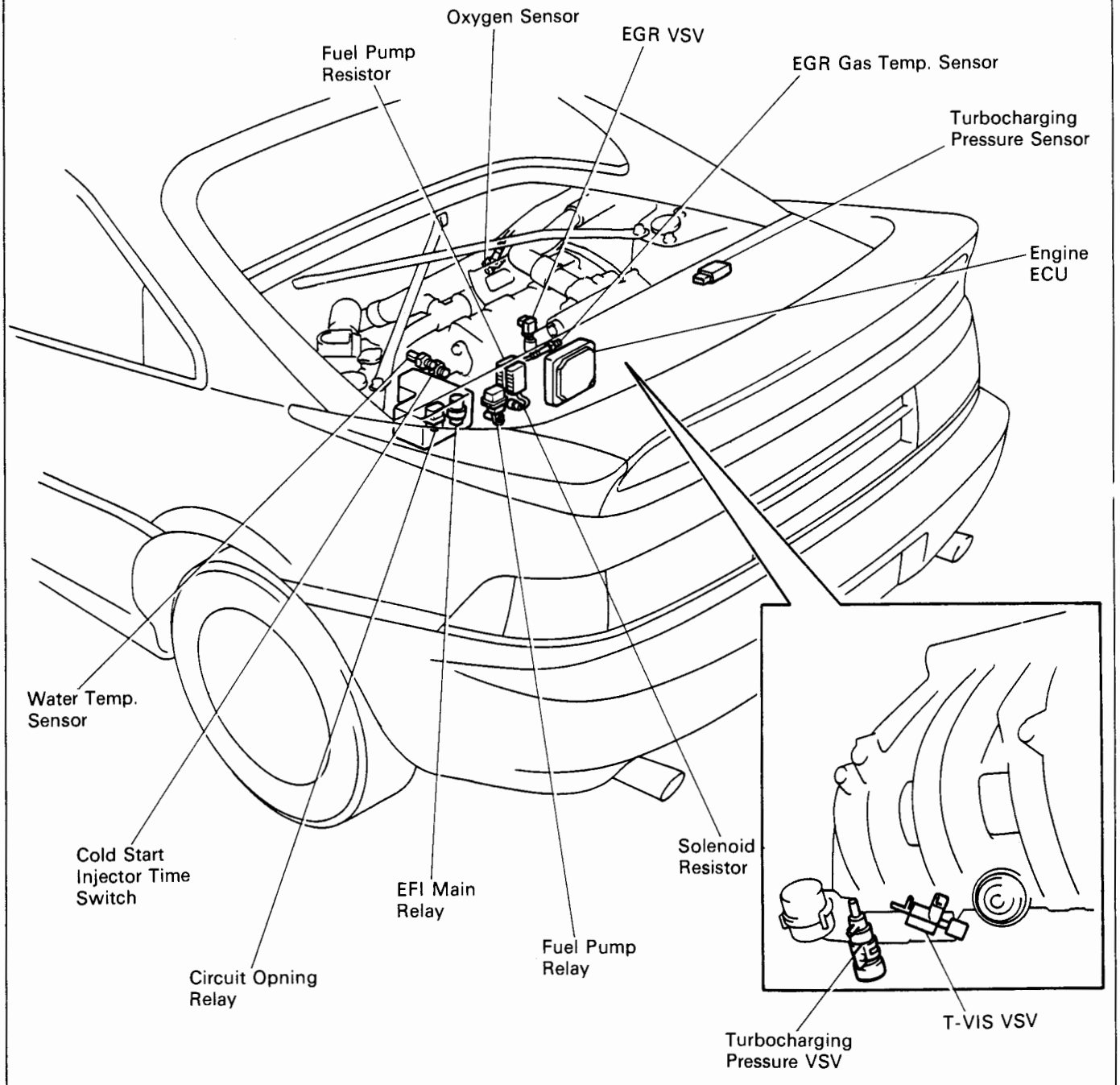

FI5786

Location of Electronic Control Parts (Cont'd)

5S-FE

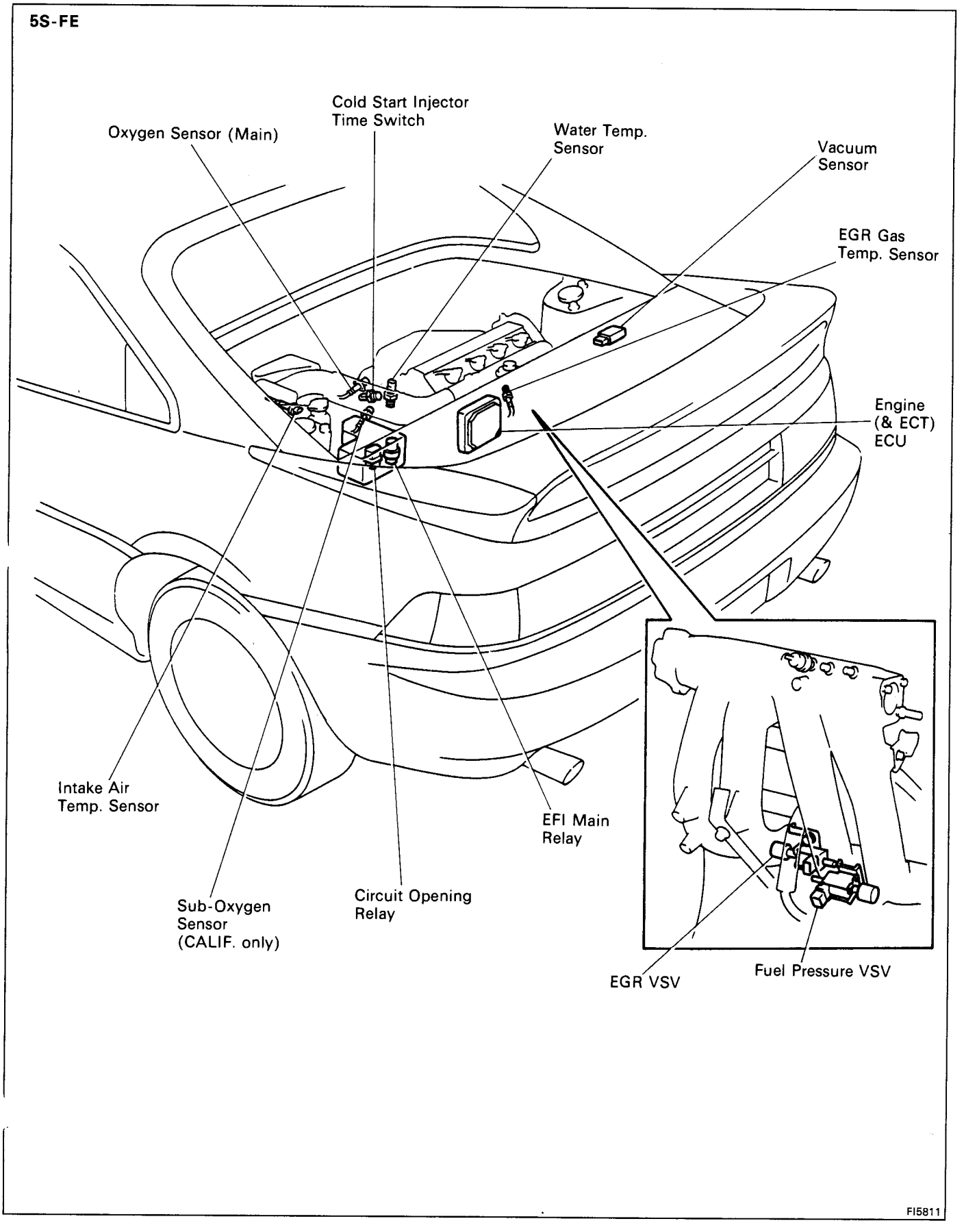

EFI Main Relay

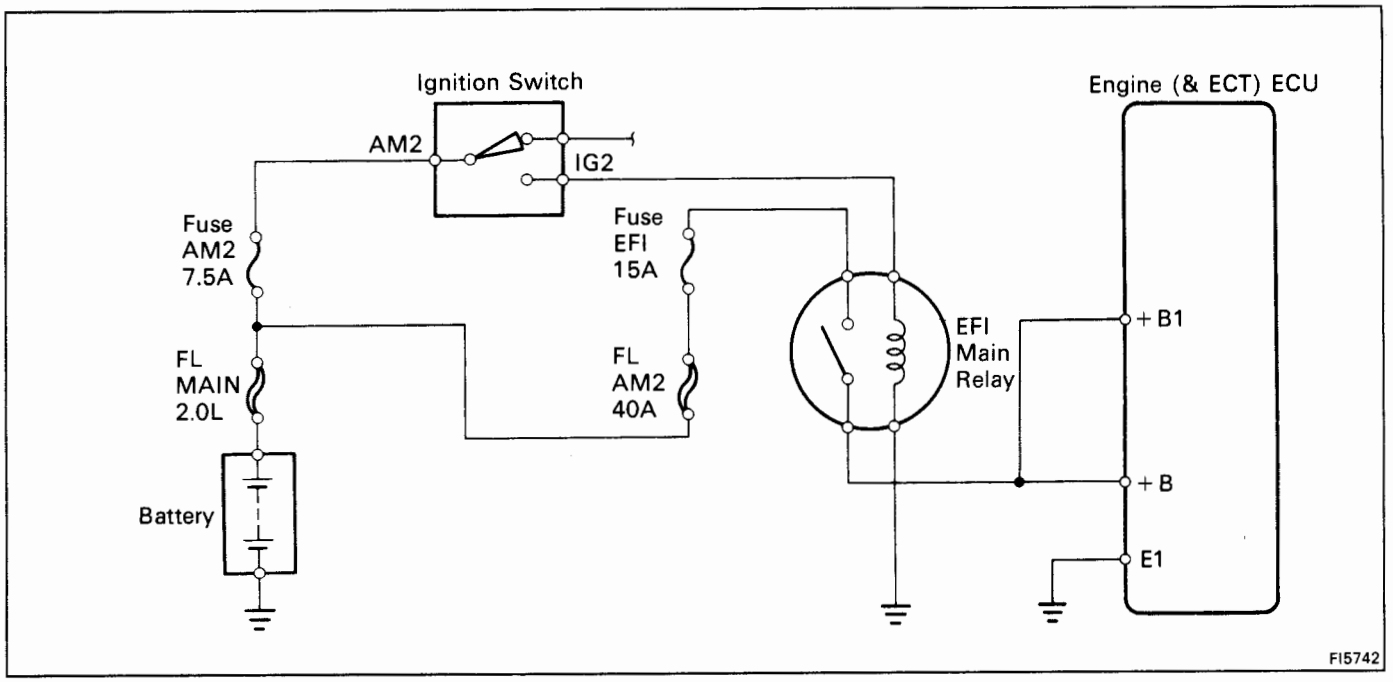

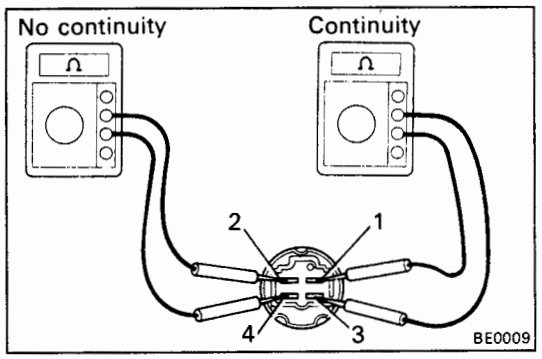

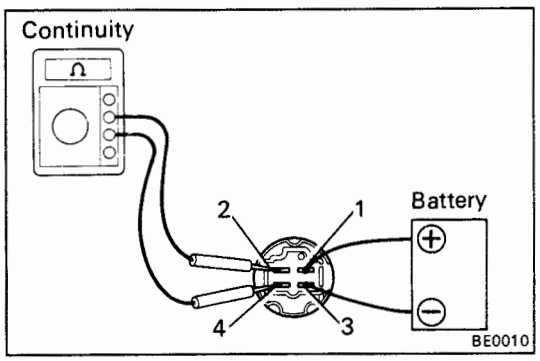

INSPECTION OF EFI MAIN RELAY

1. INSPECT RELAY CONTINUITY

(a) Using an ohmmeter, check that there is continuity between terminals 1 and 3.

(b) Check that there is no continuity between terminals 2 and 4.

If continuity is not as specified, replace the relay.

2. INSPECT RELAY OPERATION

(a) Apply battery voltage across terminals 1 and 3.

(b) Using an ohmmeter, check that there is continuity between terminals 2 and 4.

If operation is not as specified, replace the relay.

Circuit Opening Relay

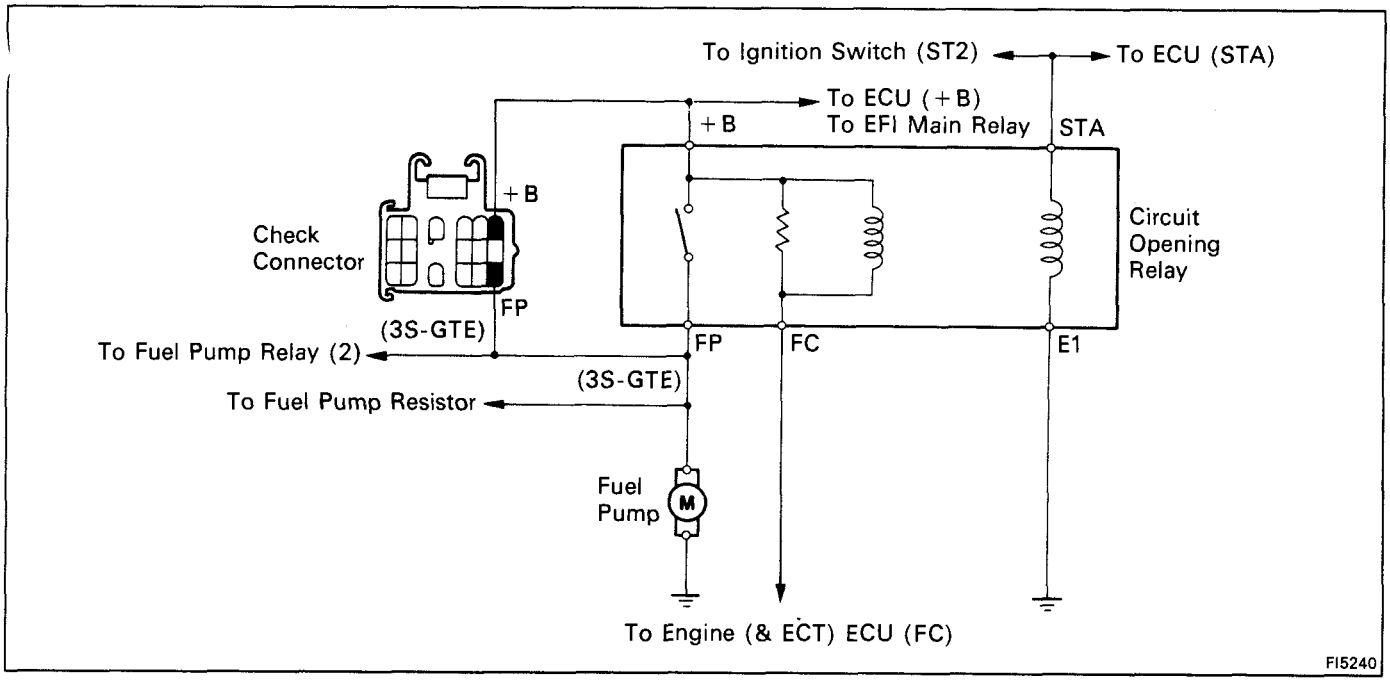

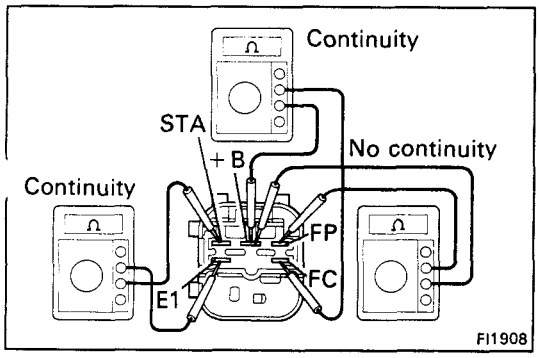

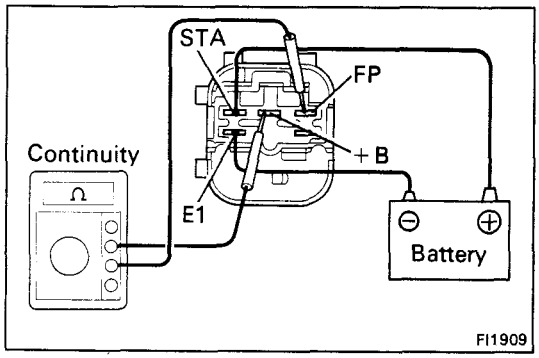

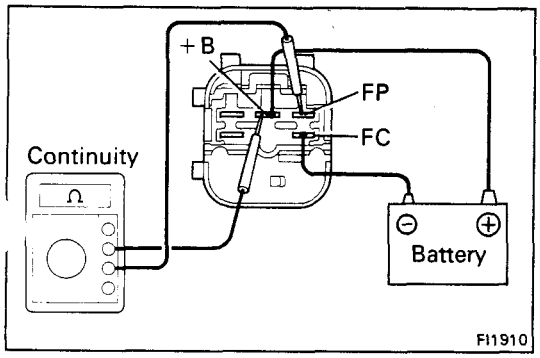

INSPECTION OF CIRCUIT OPENING RELAY

1. INSPECT RELAY CONTINUITY

(a) Using an ohmmeter, check that there is continuity between terminals STA and E1.

(b) Check that there is continuity between terminals +B and FC.

(c) Check that there is no continuity between terminals +B and FP.

If continuity is not as specified, replace the relay.

2. INSPECT RELAY OPERATION

(a) Apply battery voltage across terminals STA and E1.

(b) Using an ohmmeter, check that there is continuity between terminals +B and FP.

(c) Apply battery voltage across terminals +B and FC.

(d) Check that there is continuity between terminals +B and FP.

If operation is not as specified, replace the relay.

Cold Start Injector Time Switch

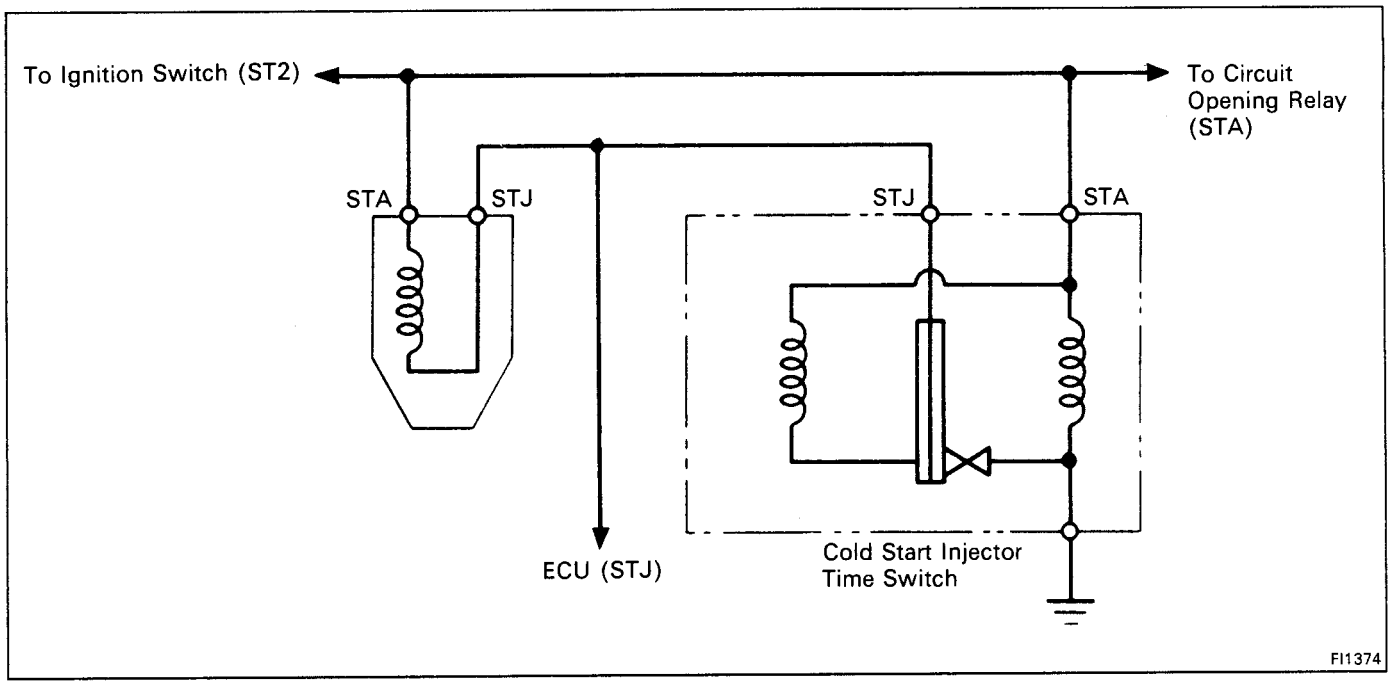

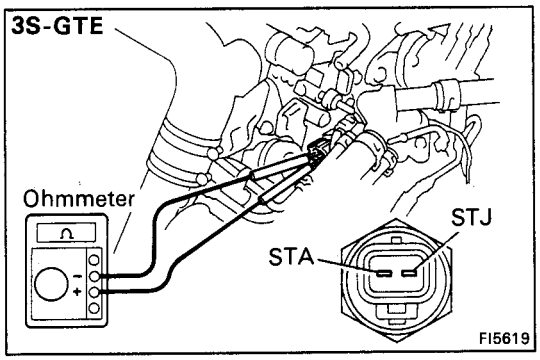

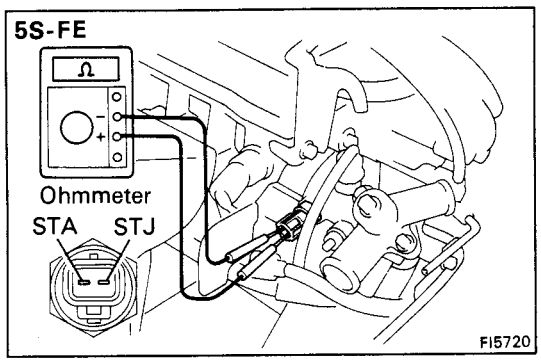

INSPECTION OF COLD START INJECTOR TIME SWITCH

INSPECT COLD START INJECTOR TIME SWITCH

Using an ohmmeter, measure the resistance between each terminal.

Resistance:

3S-GTE

STA – STJ	**30 – 50 Ω below 10°C (50°F)**
	70 – 90 Ω above 25°C (77°F)
STA – Ground	**30 – 90 Ω**

5S-FE

STA – STJ	**20 – 40 Ω below 30°C (86°F)**
	40 – 60 Ω above 40°C (104°F)
STA – Ground	**20 – 80 Ω**

If the resistance is not as specified, replace the switch.

Solenoid Resistor (3S-GTE)

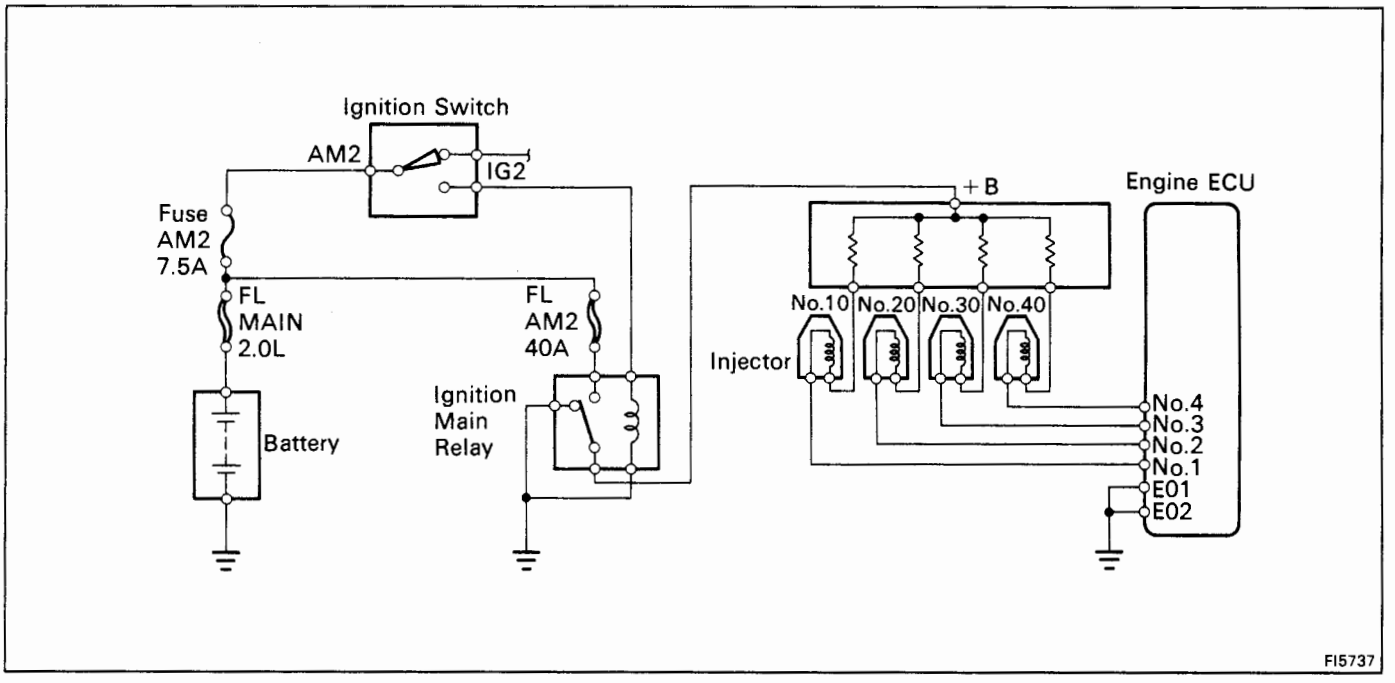

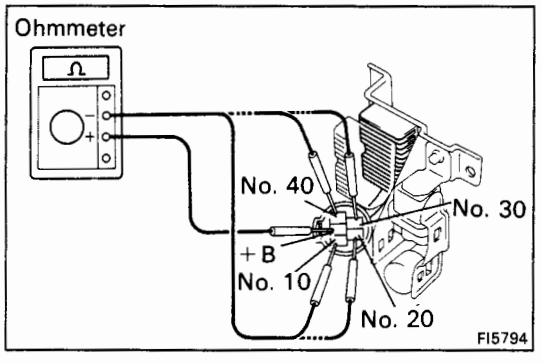

INSPECTION OF SOLENOID RESISTOR

INSPECT SOLENOID RESISTOR

Using an ohmmeter, measure the resistance between terminal +B and other terminals.

Resistance: 4 – 6 Ω

If the resistance is not as specified, replace the resistor.

Fuel Pump Relay and Resistor (3S-GTE)

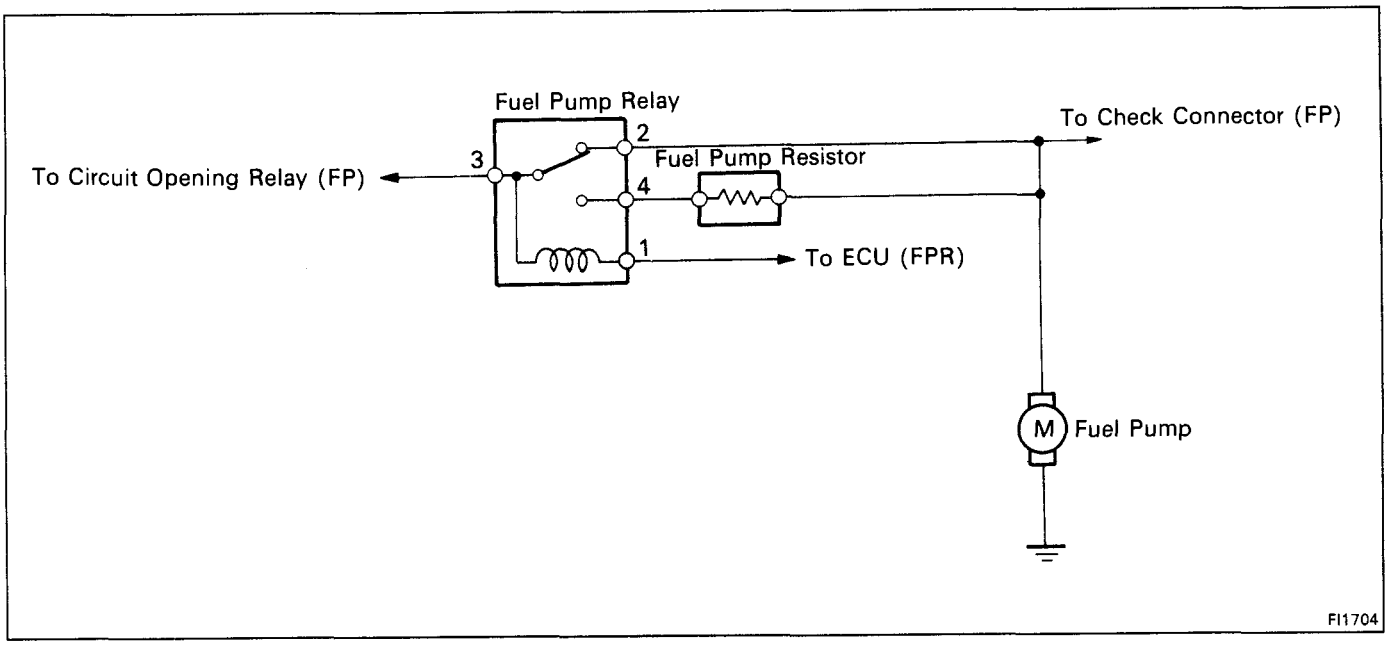

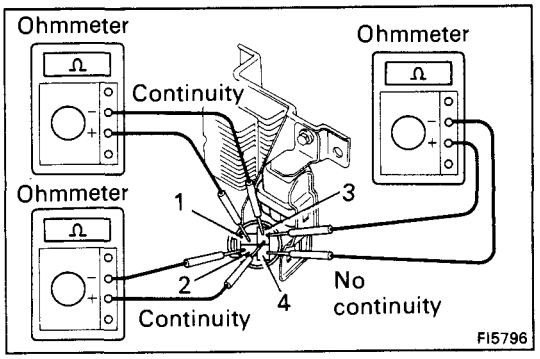

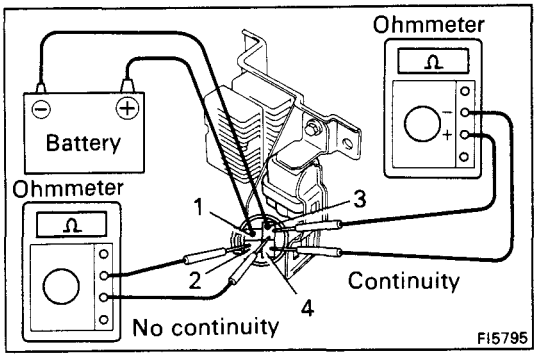

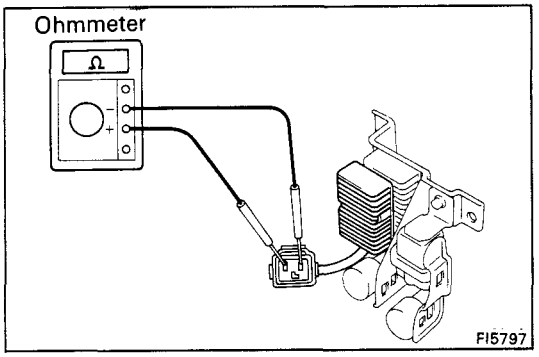

INSPECTION OF FUEL PUMP RELAY AND RESISTOR

1. INSPECT FUEL PUMP RELAY

A. Inspect relay continuity

(a) Using an ohmmeter, check that there is continuity between terminals 1 and 3.

(b) Check that there is continuity between terminals 2 and 3.

(c) Check that there is no continuity between terminals 3 and 4.

If continuity is not as specified, replace the relay.

B. Inspect relay operation

(a) Apply battery voltage across terminals 1 and 3.

(b) Using an ohmmeter, check that there is no continuity between terminals 2 and 3.

(c) Check that there is continuity between terminals 3 and 4.

If operation is not as specified, replace the relay.

2. INSPECT FUEL PUMP RESISTOR

Using an ohmmeter, measure the resistance between the terminals.

Resistance: Approx. 0.73 Ω

If the resistance is not as specified, replace the resistor.

Fuel Pressure VSV (5S-FE)

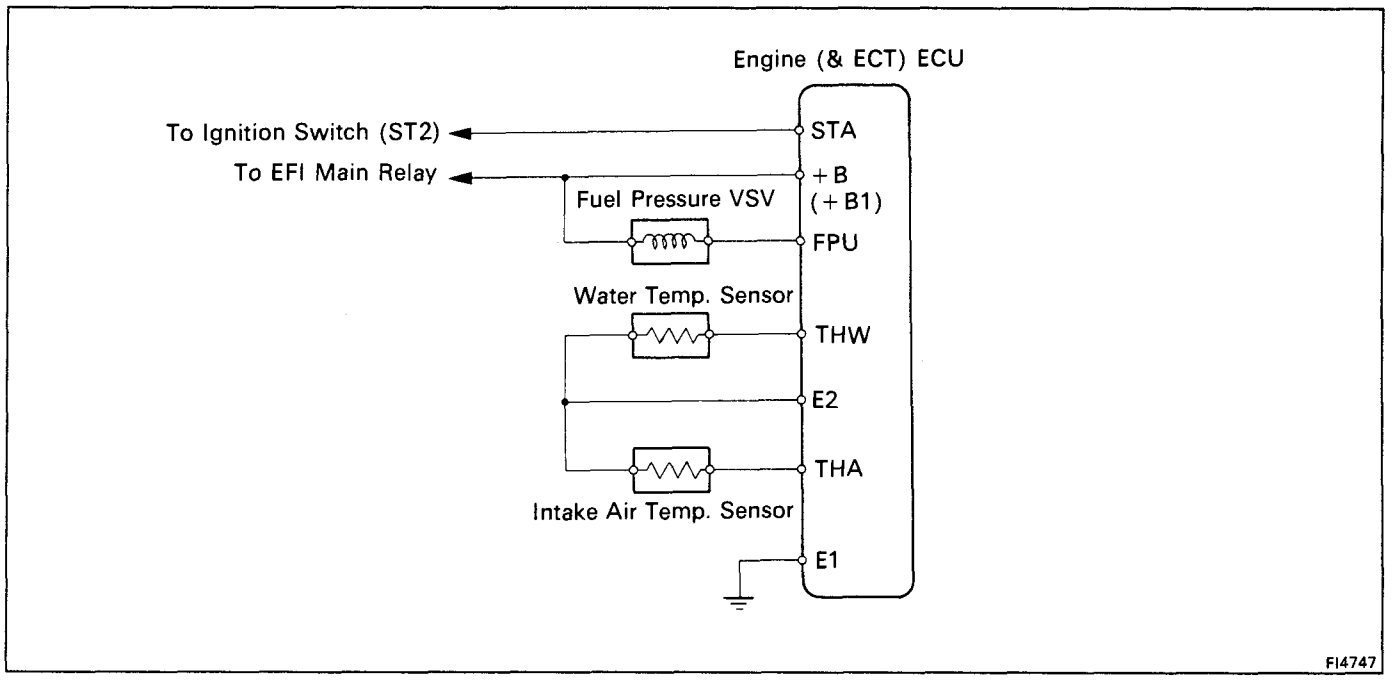

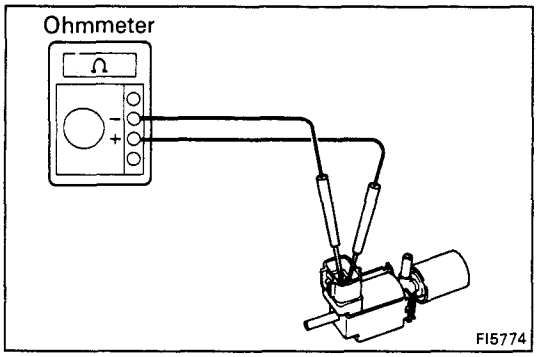

INSPECTION OF FUEL PRESSURE VSV

1. INSPECT VSV FOR OPEN CIRCUIT

Using an ohmmeter, check that there is continuity between the terminals.

Resistance (Cold): 33 – 39 Ω

If there is no continuity, replace the VSV.

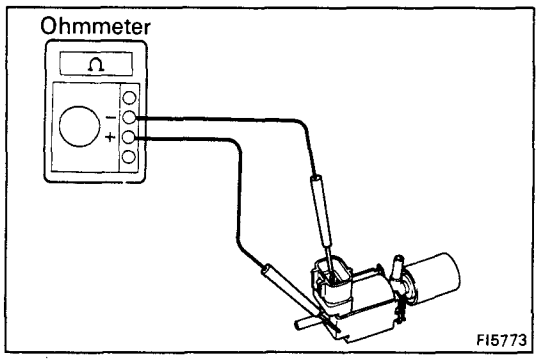

2. INSPECT VSV FOR GROUND

Using an ohmmeter, check that there is no continuity between each terminal and the body.

If there is continuity, replace the VSV.

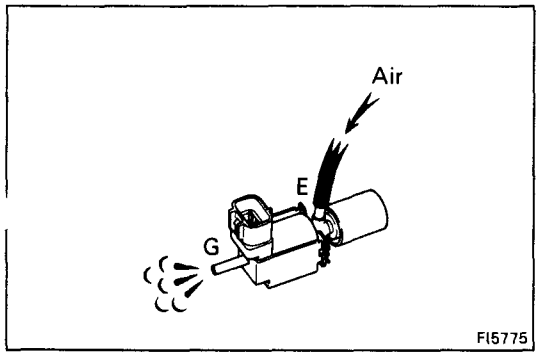

3. INSPECT VSV OPERATION

(a) Check that air flows from ports E to G.

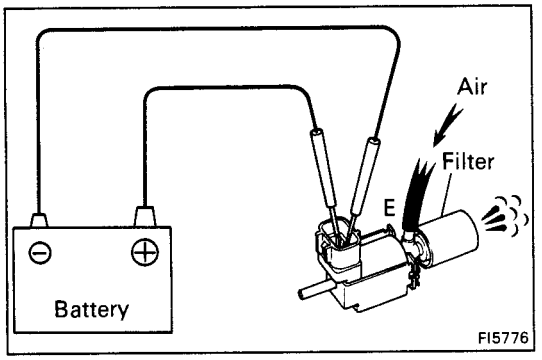

(b) Apply battery voltage across the terminals.

(c) Check that air flows from ports E to the filter.

If operation is not as specified, replace the VSV.

T-VIS VSV (3S-GTE)

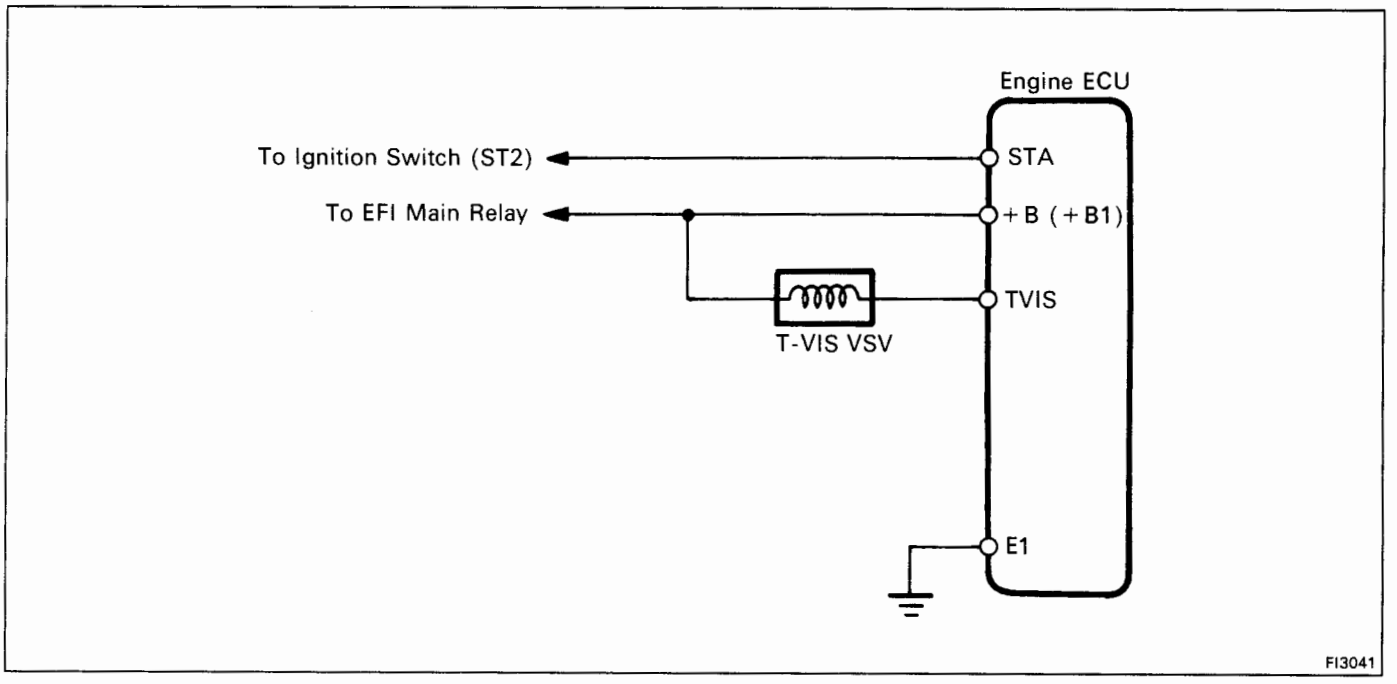

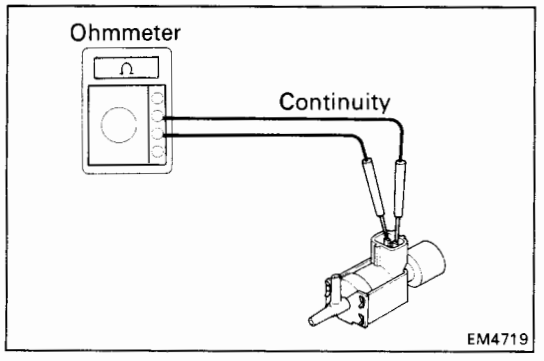

INSPECTION OF T-VIS VSV

1. INSPECT VSV FOR OPEN CIRCUIT

Using an ohmmeter, check that there is continuity between the terminals.

Resistance (Cold): 33 – 39 Ω

If there is no continuity, replace the VSV.

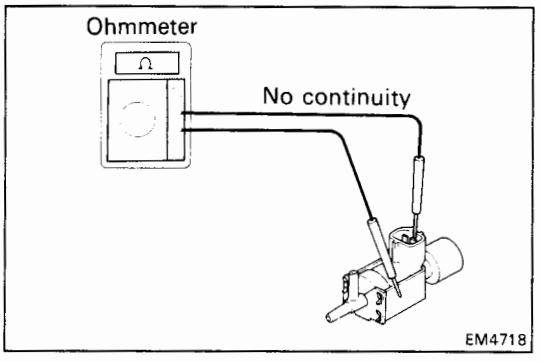

2. INSPECT VSV FOR GROUND

Using an ohmmeter, check that there is no continuity between each terminal and the body.

If there is continuity, replace the VSV.

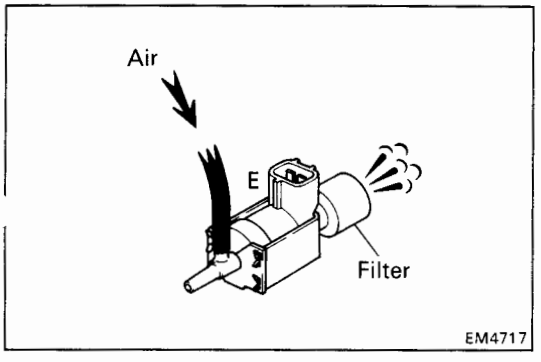

3. INSPECT VSV OPERATION

(a) Check that air flows from port E to the filter.

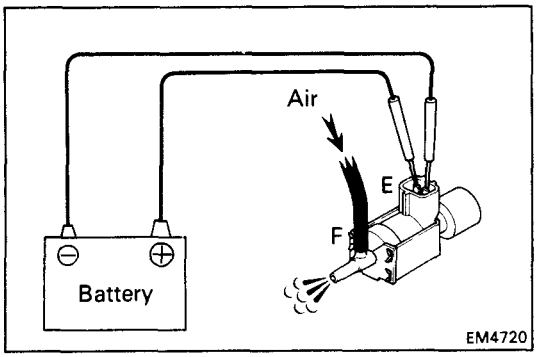

(b) Apply battery voltage across the terminals.

(c) Check that air flows from ports E to F.

If operation is not as specified, replace the VSV.

Turbocharging Pressure VSV (3S-GTE)

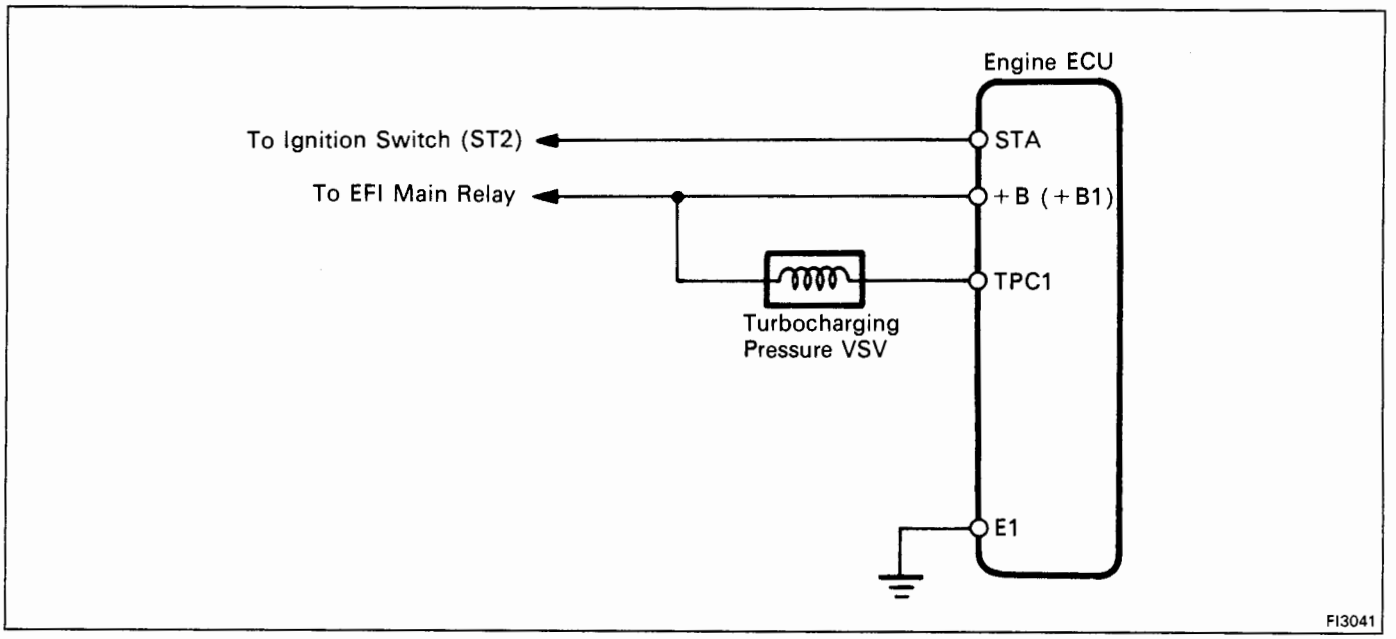

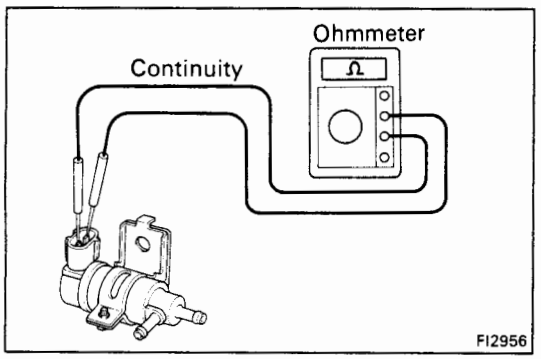

INSPECTION OF TURBOCHARGING PRESSURE VSV

1. **INSPECT VSV FOR OPEN CIRCUIT**

   Using an ohmmeter, check that there is continuity between the terminals.

   Resistance (Cold): 24 – 30 Ω

   If there is no continuity, replace the VSV.

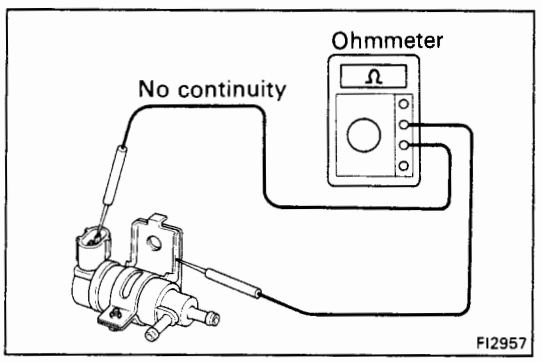

2. **INSPECT VSV FOR GROUND**

   Using an ohmmeter, check that there is no continuity between each terminal and the body.

   If there is continuity, replace the VSV.

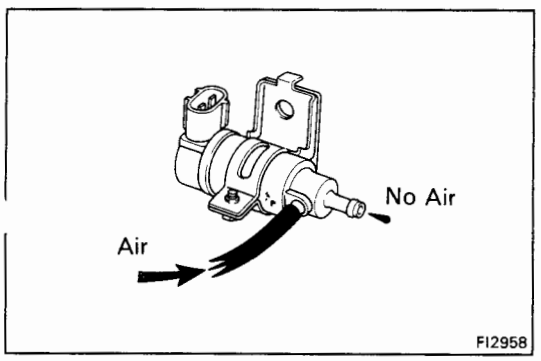

3. **INSPECT VSV OPERATION**

   (a) Check that air does not flow from ports E to F.

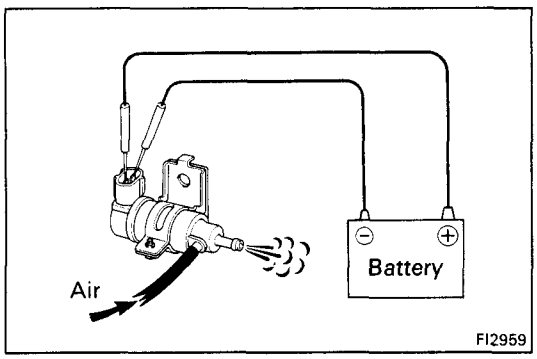

(b) Apply battery voltage across the terminals.

(c) Check that air flows from ports E to F.

If operation is not as specified, replace the VSV.

EGR VSV

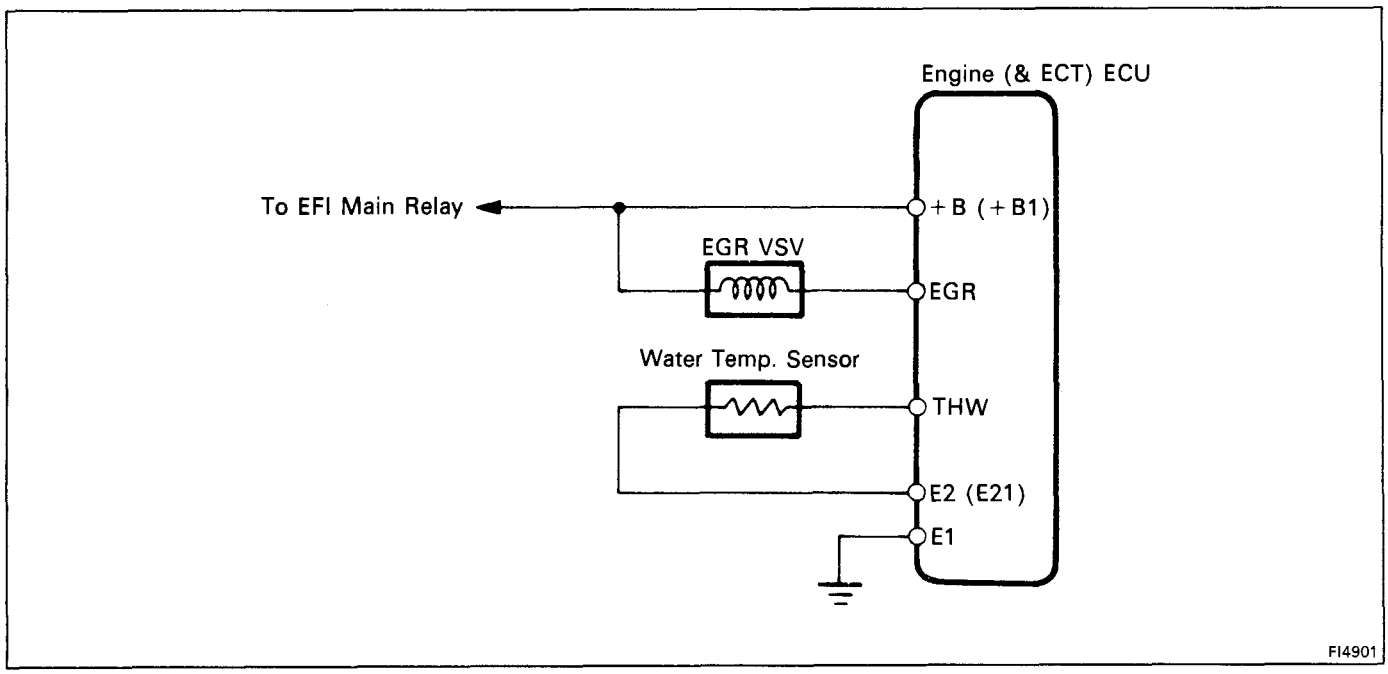

INSPECTION OF EGR VSV

3S-GTE (See page EC-10)
5S-FE (See page EC-24)

Water Temperature Sensor

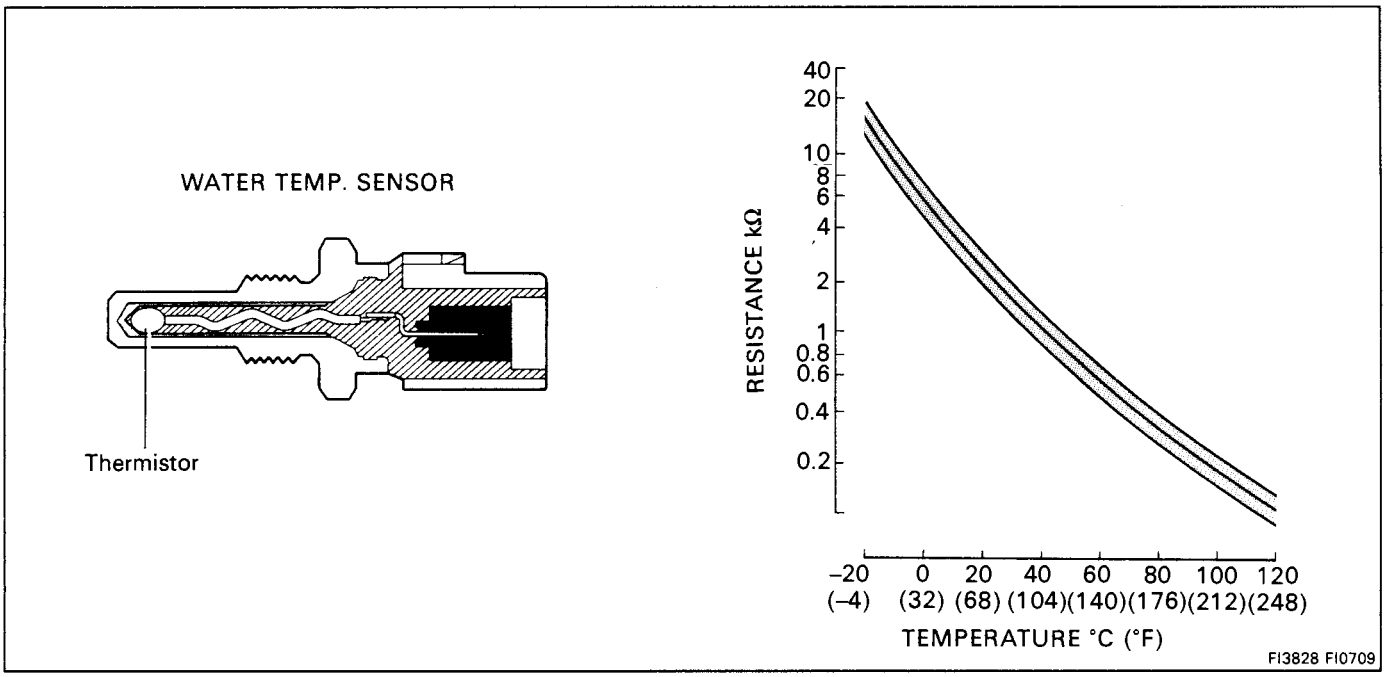

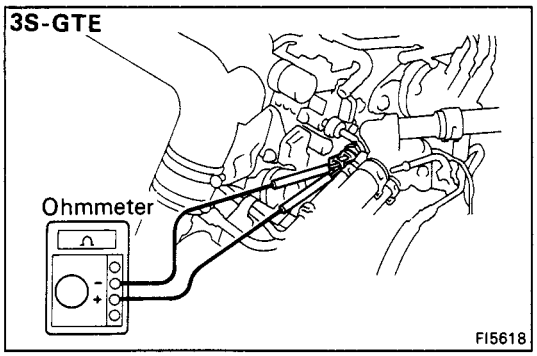

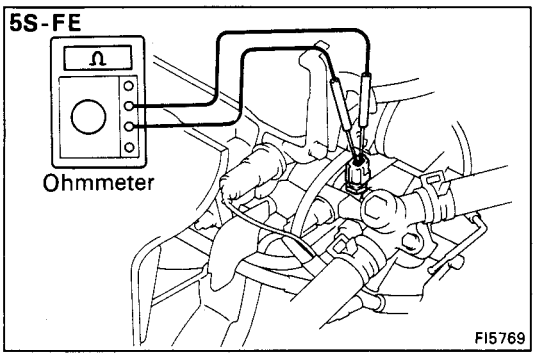

INSPECTION OF WATER TEMPERATURE SENSOR

INSPECT WATER TEMPERATURE SENSOR

Using an ohmmeter, measure the resistance between the terminals.

Resistance: Refer to the chart above

If the resistance is not as specified, replace the sensor.

Intake Air Temperature Sensor (5S-FE)

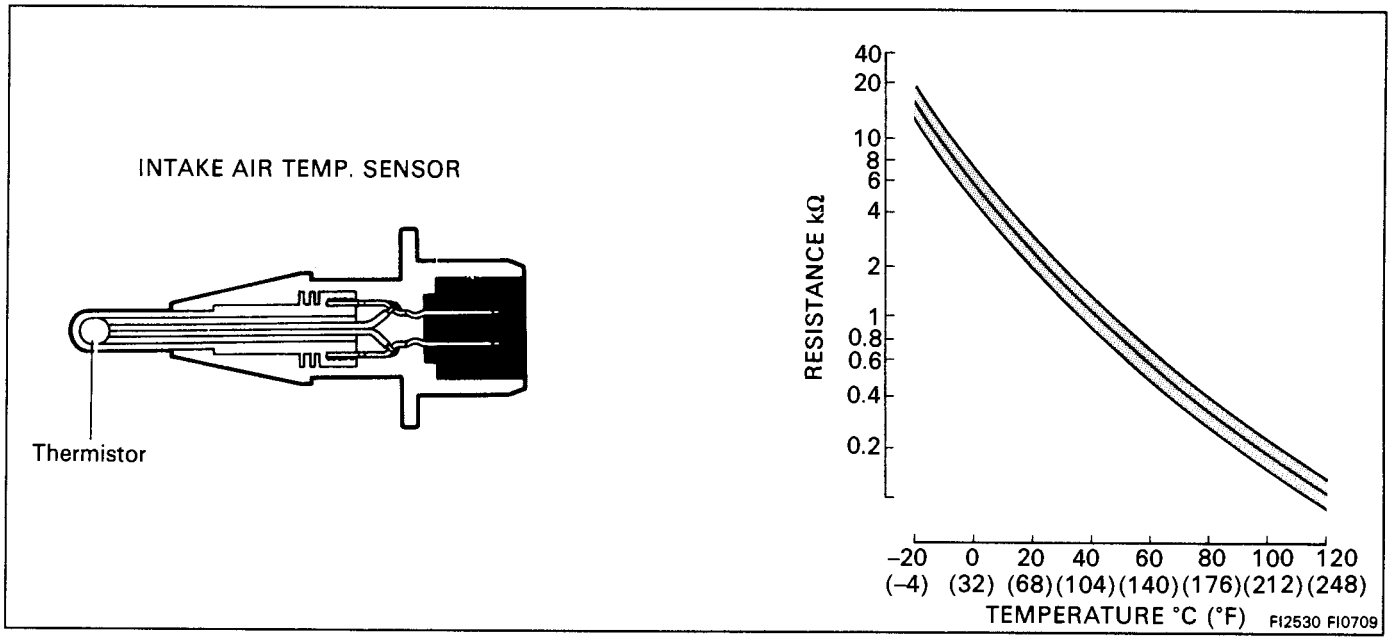

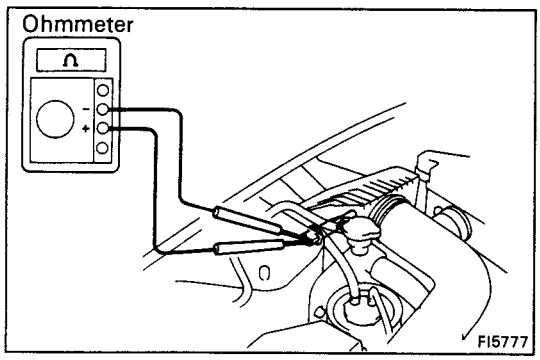

INSPECTION OF INTAKE AIR TEMPERATURE SENSOR

INSPECT RESISTANCE OF INTAKE AIR TEMPERATURE SENSOR

Using an ohmmeter, measure the resistance between the terminals.

Resistance: Refer to the chart above

If the resistance is not as specified, replace the sensor.

Vacuum Sensor (Manifold Absolute Pressure Sensor) (5S-FE)

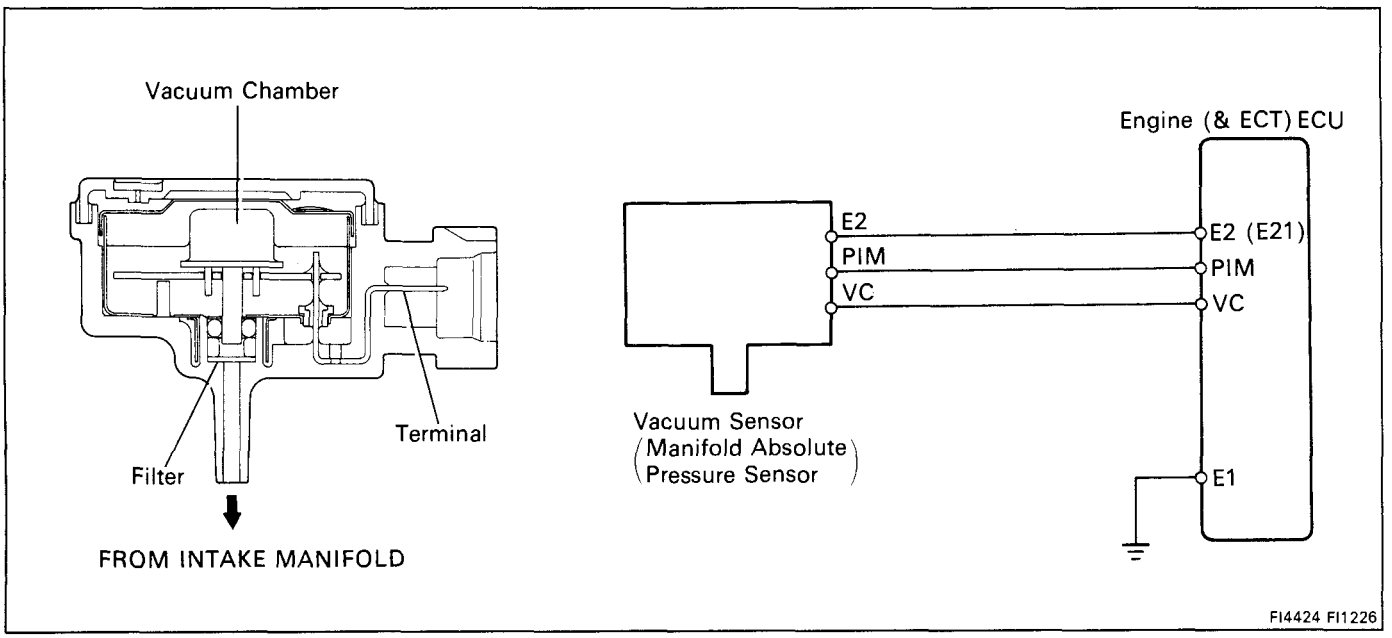

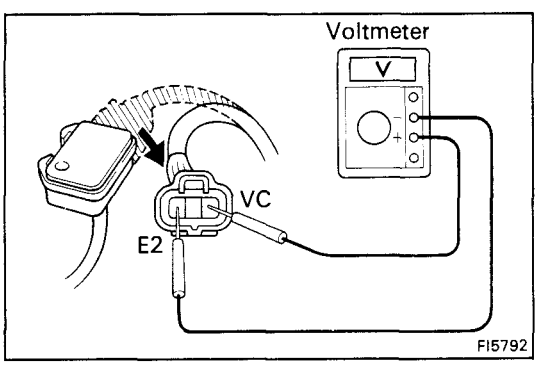

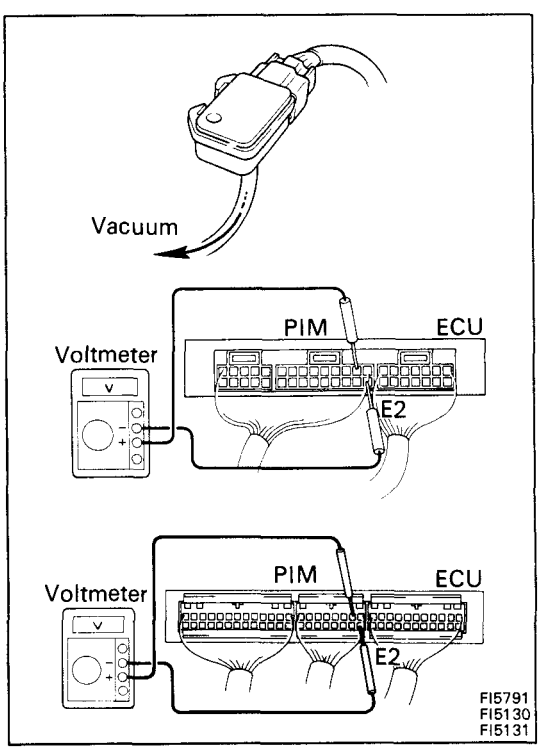

INSPECTION OF VACUUM SENSOR

1. INSPECT POWER SOURCE VOLTAGE OF VACUUM SENSOR

(a) Disconnect the vacuum sensor connector.

(b) Turn the ignition switch ON.

(c) Using a voltmeter, measure the voltage between terminals VC and E2.

Voltage: 4.5 – 5.5 V

(d) Disconnect the vacuum sensor connector.

2. INSPECT POWER OUTPUT OF VACUUM SENSOR

(a) Turn the ignition switch ON.

(b) Disconnect the vacuum hose of the intake manifold (chamber) side.

(c) Connect a voltmeter to terminals PIM and E2 of the ECU, and measure and record the output voltage under ambient atmospheric pressure.

(d) Apply vacuum to the vacuum sensor in 100 mmHg (3.94 in.Hg, 13.3 kPa) segments to 500 mmHg (19.69 in.Hg, 66.7 kPa).

(e) Measure voltage drop from step (c) above for each segment.

Voltage drop

Applied Vacuum mmHg in.Hg. kPa	100 3.94 13.3	200 7.87 26.7	300 11.81 40.0	400 15.75 53.3	500 19.69 66.7
Voltage drop V	0.3 – 0.5	0.7 – 0.9	1.1 – 1.3	1.5 – 1.7	1.9 – 2.1

Turbocharging Pressure Sensor (3S-GTE)

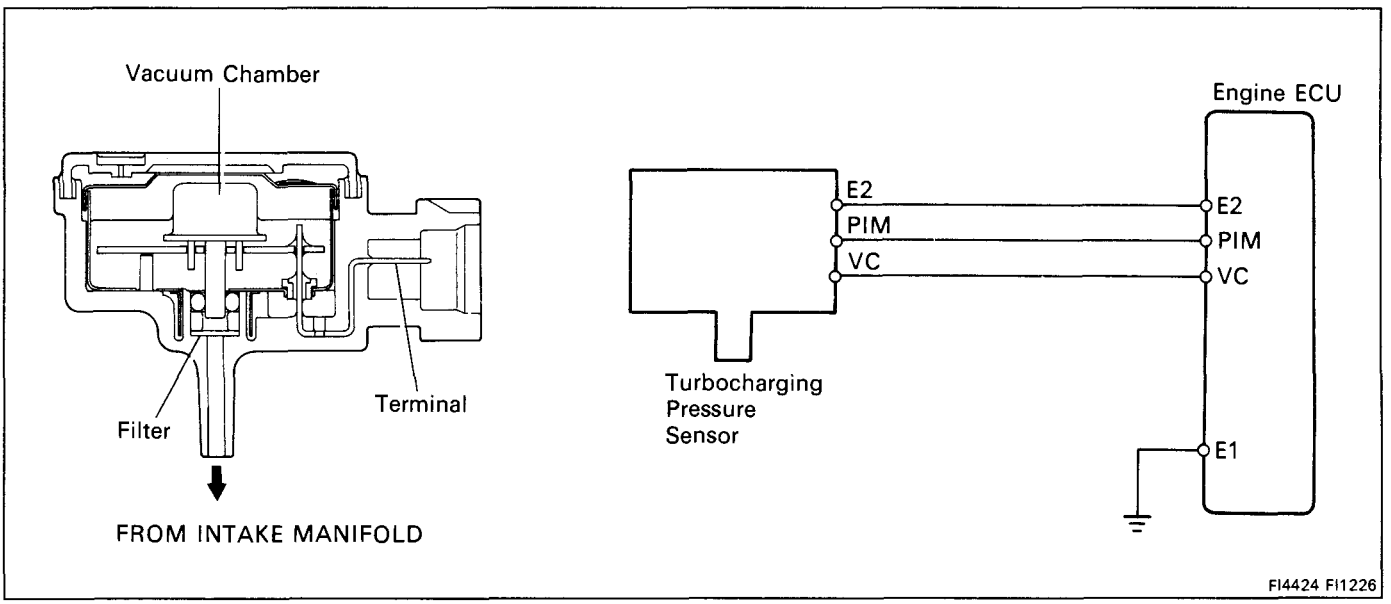

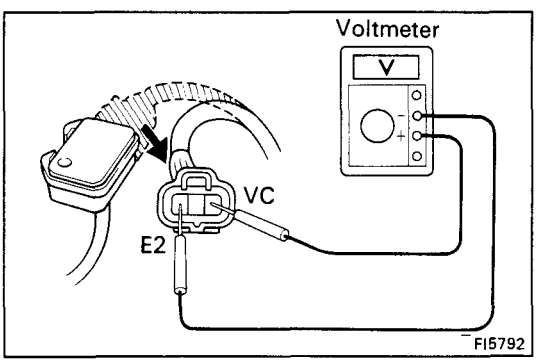

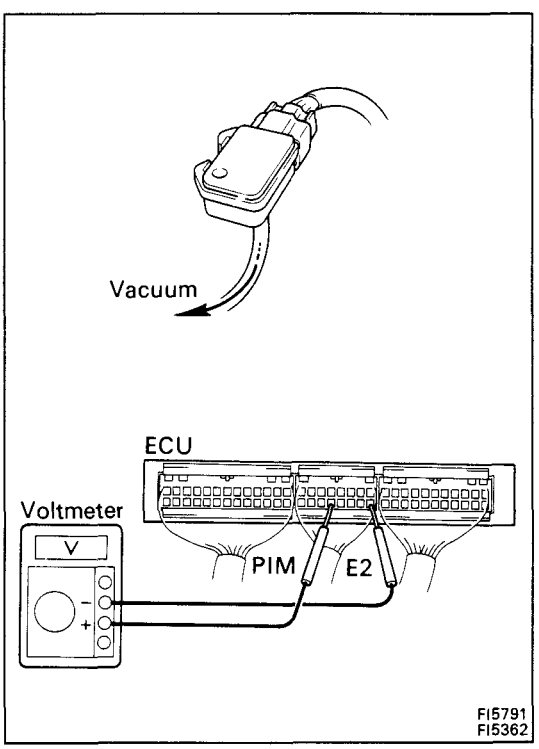

INSPECTION OF TURBOCHARGING PRESSURE SENSOR

1. INSPECT POWER SOURCE VOLTAGE OF TURBOCHARGING PRESSURE SENSOR

(a) Disconnect the pressure sensor connector.

(b) Turn the ignition switch ON.

(c) Using a voltmeter, measure the voltage between terminals VC and E2.

Voltage: 4.5 – 5.5 V

(d) Reconnect the pressure sensor connector.

2. INSPECT POWER OUTPUT OF TURBOCHARGING PRESSURE SENSOR

(a) Turn the ignition switch ON.

(b) Disconnect the vacuum hose of the intake manifold (chamber) side.

(c) Connect a voltmeter to terminals PIM and E2 of the ECU, and measure and record the output voltage under ambient atmospheric pressure.

(d) Apply vacuum to the pressure sensor in 100 mmHg (3.94 in.Hg, 13.3 kPa) segments to 500 mmHg (19.69 in.Hg, 66.7 kPa).

(e) Measure voltage drop from step (c) above for each segment.

Voltage drop

Applied Vacuum mmHg in.Hg. kPa	100 3.94 13.3	200 7.87 26.7	300 11.81 40.0	400 15.75 53.3	500 19.69 66.7
Voltage drop V	0.15 – 0.35	0.4 – 0.6	0.65 – 0.85	0.9 – 1.1	1.15 – 1.35

EGR Gas Temperature Sensor (3S-GTE and 5S-FE (CALIF. only))

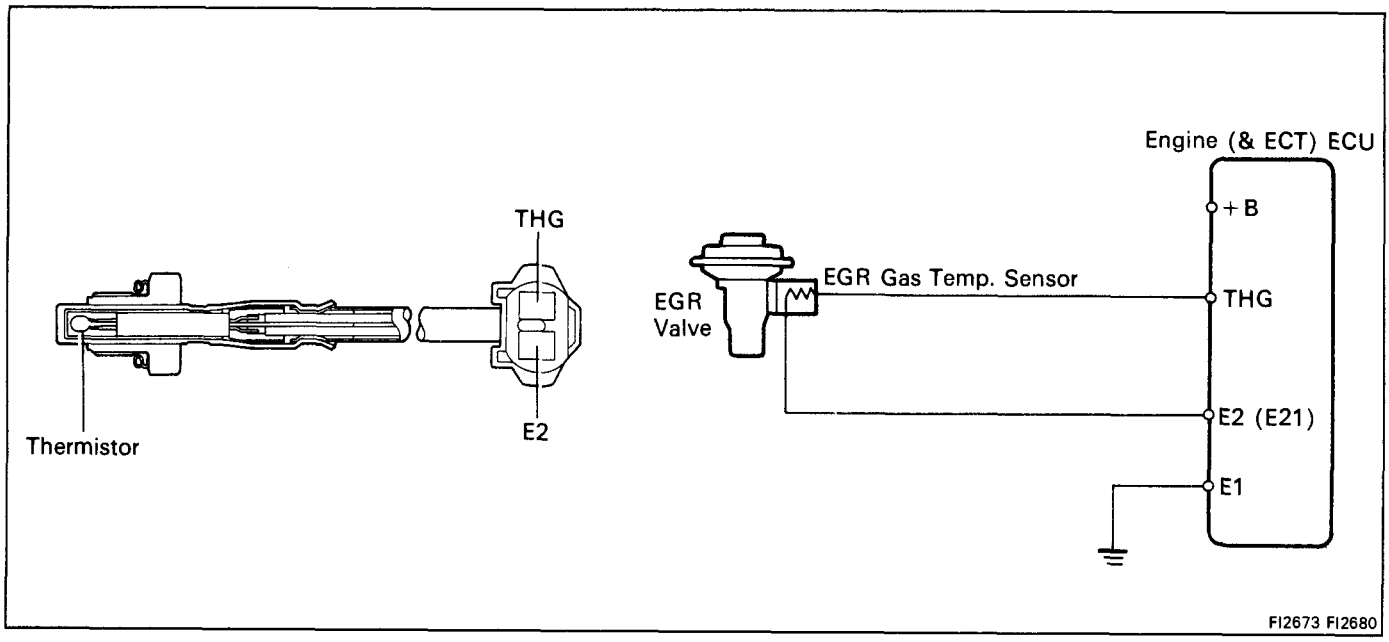

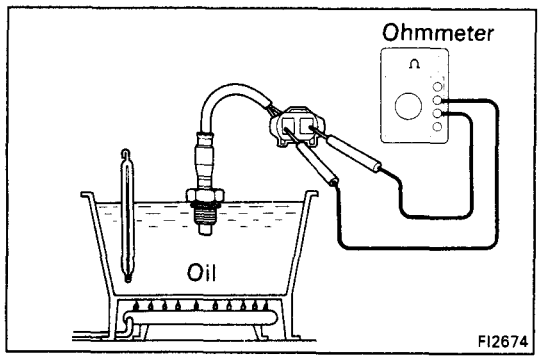

INSPECTION OF EGR GAS TEMPERATURE SENSOR

INSPECT EGR GAS TEMPERATURE SENSOR

Using an ohmmeter, measure the resistance between the terminals.

Resistance:

69.40 – 88.50 kΩ at 50°C (112°F)
11.89 – 14.37 kΩ at 100°C (212°F)
2.79 – 3.59 kΩ at 150°C (302°F)

If the resistance is not as specified, replace the sensor.

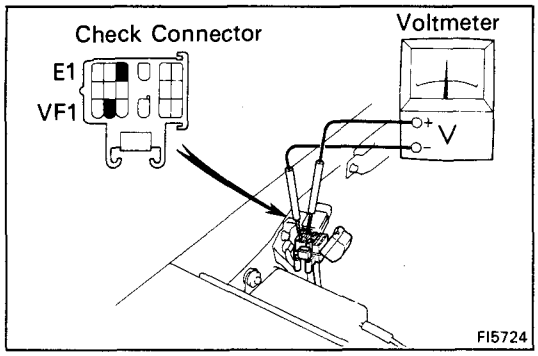

Oxygen Sensor (Main)

INSPECTION OF OXYGEN SENSOR

1. WARM UP ENGINE

Allow the engine to warm up to normal operating temperature.

2. INSPECT FEEDBACK VOLTAGE

Connect the positive (+) probe of a voltmeter to terminal VF1 of the check connector, and negative (–) probe to terminal E1. Perform the test as follows:

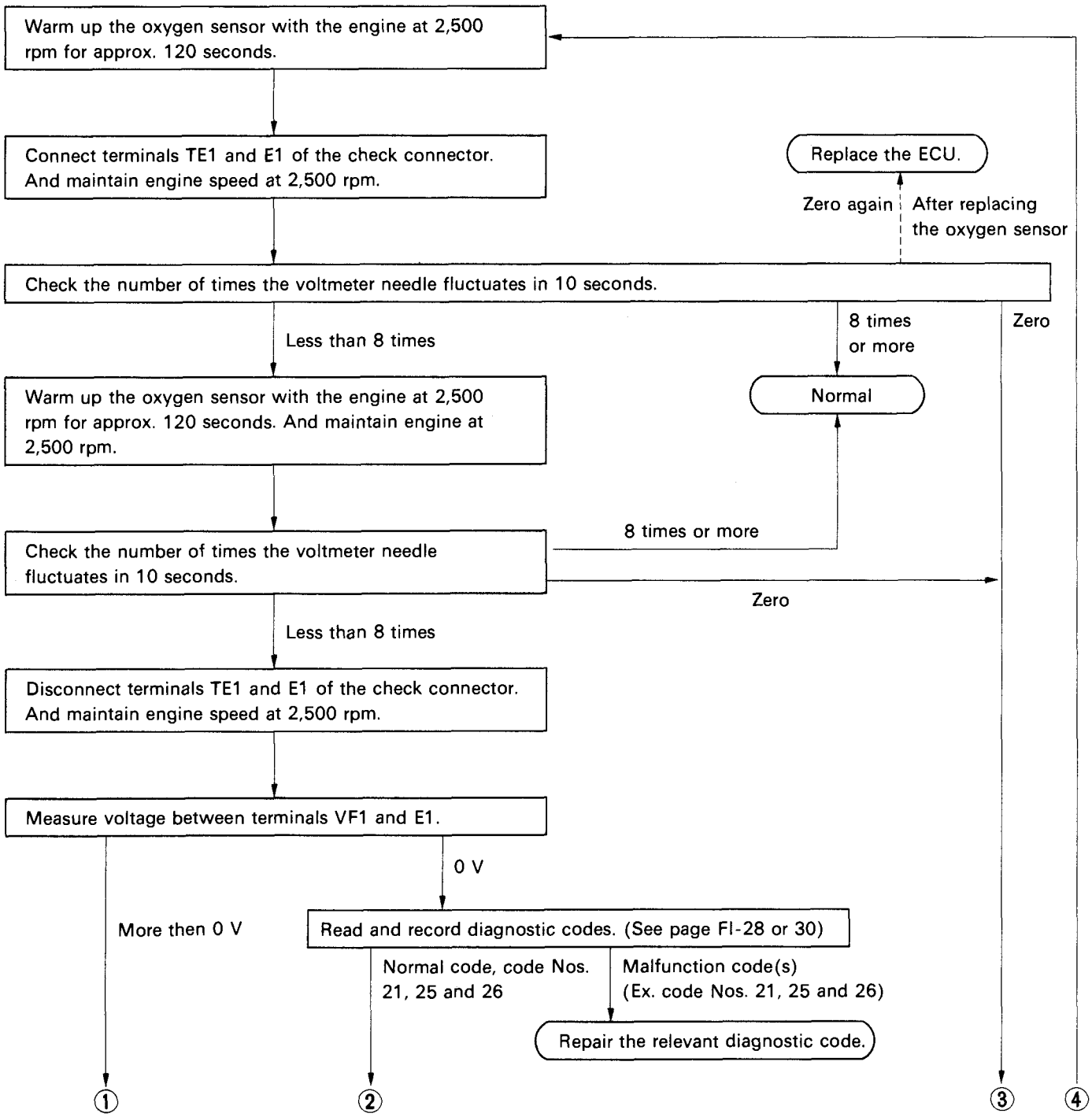

CONTINUED ON PAGE FI-174

CONTINUED FROM PAGE FI-173

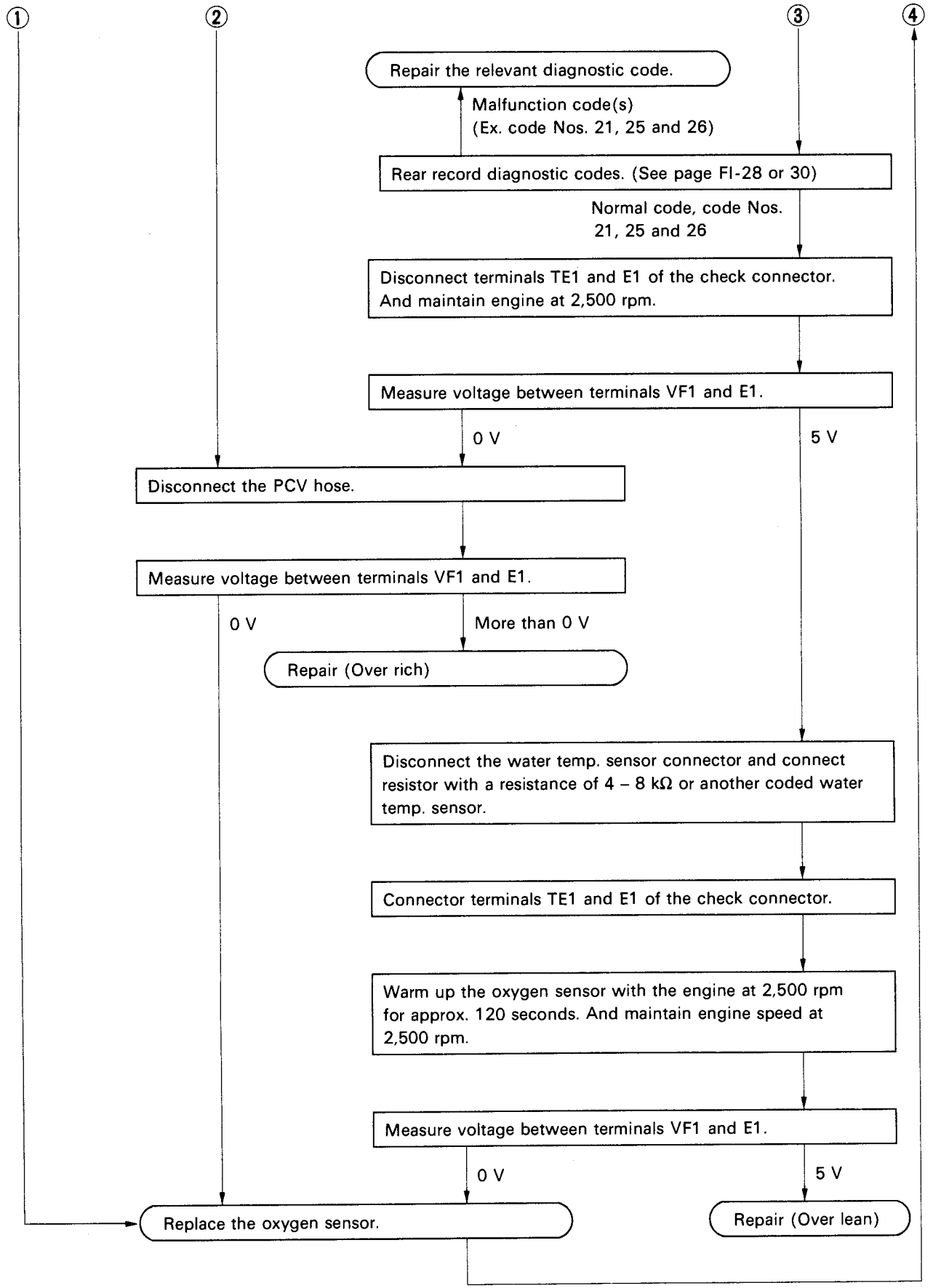

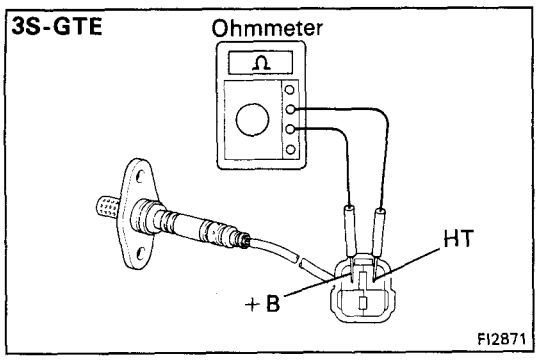

3. **(3S-GTE)**
INSPECT HEATER RESISTANCE OF OXYGEN SENSOR

Using an ohmmeter, measure the resistance between the terminals +B and HT.

Resistance: 5.1 – 6,3 kΩ at 20°C (68°F)

If the resistance is not as specified, replace the sensor.

Sub-Oxygen Sensor (5S-FE CALIF. only)

INSPECTION OF SUB-OXYGEN SENSOR

INSPECT SUB-OXYGEN SENSOR

HINT: Inspect it only when code No.27 is displayed.

(a) Cancel diagnostic code. (See page FI-26)

(b) Warm up the engine until it reaches normal operating temperature.

(c) (M/T)
Drive for 5 minutes or more between 80 km/h (50 mph) and 100 km/h in 4th or 5th gear.

(A/T)
Drive for 5 minutes or more between 80 km/h (50 mph) and 100 km/h (62 mph) in "D" range.

(d) Following the conditions in step (c), press fully on the accelerator pedal for 2 seconds or more.

HINT: Do not exceed 100 km/h (62 mph), or diagnostic code will be cancelled.

(e) Stop the vehicle and turn the ignition switch to OFF.

(f) Carry out steps (b), (c) and (d) again to test acceleration.

If code No. 27 reappears again, check the sub-oxygen sensor circuit. If the circuit is normal, replace the sub-oxygen sensor.

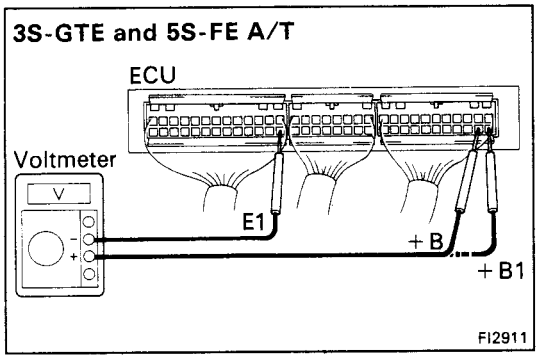

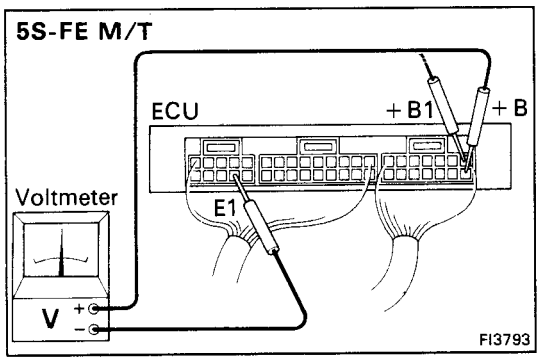

Electronic Controlled Unit (ECU)

INSPECTION OF ECU

HINT: The EFI circuit can be checked by measuring the resistance and voltage at the wiring connectors of the ECU.

1. INSPECT VOLTAGE OF ECU

Check the voltage between each terminal of the wiring connectors.

- Turn the ignition switch ON.
- Measure the voltage at each terminal.

HINT:

- Perform all voltage measurements with the connectors connected.
- Verify that the battery voltage is 11 V or more when the ignition switch is ON.

Voltage at ECU Wiring Connectors (3S-GTE)

Terminals	Condition		STD voltage (V)
+B, +B1 – E1	IG SW ON		10 – 14
BATT – E1	–		10 – 14
IDL – E2	IG SW ON	Throttle valve open	4 – 6
VTA – E2	IG SW ON	Throttle valve fully closed	0.1 – 1.0
	IG SW ON	Throttle valve fully open	3.2 – 4.2
VC – E2	IG SW ON	–	4 – 6
VS – E2	IG SW ON	Measuring plate fully closed	3.7 – 4.3
	IG SW ON	Measuring plate fully open	0.2 – 0.5
	Idling (No load)		2.6 – 3.6
	3,000 rpm (No load)		1.0 – 2.0
No. 1, No. 2 – E01; No. 3, No. 4 – E02	IG SW ON		10 – 14
THA1 – E2	IG SW ON	Intake air temp. 20°C (68°F)	1 – 3
THW – E2	IG SW ON	Coolant temp. 80°C (176°F)	0.1 – 1.1
STA – E1	Cranking		6 – 14
IGT – E1	Cranking or idling		0.8 – 1.2
RSC, RSO – E1	IG SW ON	Engine ECU connector connected	8 – 14
W– E1	No trouble ("CHECK" engine warning light off) and engine running		10 – 14
PIM– E2	IG SW ON		2.5 – 4.5
AC1– E1	IG SW ON	Air conditioning ON	8 – 14
*1 TVIS– E1	IG SW ON	Throttle valve fully closed	2.0 or less
	IG SW ON	Throttle valve open	10 – 14
*2 TVIS– E1	Idling		2.0 or less
	4,200 rpm or more		10 – 14
T– E1	IG SW ON	Check connector TE1 – E1 not connected	10 – 14
	IG SW ON	Check connector TE1 – E1 connected	0.5 or less

Engine ECU Terminals *1 w/ Regulator Gasoline *2 w/ Premium Gasoline

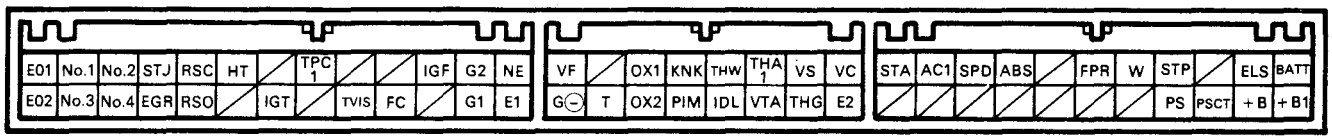

FI2796

Voltage at ECU Wiring Connectors (5S-FE M/T)

Terminals	Condition		STD voltage (V)
+B, +B1 – E1	IG SW ON		10 – 14
BATT – E1	–		10 – 14
IDL – E1	IG SW ON	Throttle valve open	8 – 14
PSW – E1	IG SW ON	Throttle valve fully closed (Throttle opener must be cancelled first)	4.5 – 5.5
PIM – E2	IG SW ON		3.3 – 3.9
VC – E2	IG SW ON		4.5 – 5.5
No.10 – E01, No.20 – E02	IG SW ON		10 – 14
THA – E2	IG SW ON	Intake air temp. 20°C (68°F)	1.7 – 3.1
THW – E2	IG SW ON	Coolant temp. 80°C (176°F)	0.3 – 0.8
STA – E1	Cranking		6 – 14
IGT – E1	Cranking or idling		0.8 – 1.2
ISCC, ISCO – E1	IG SW ON		8 – 14
W– E1	No trouble ("CHECK" engine warning light off) and engine running		10 – 14
A/C – E1	IG SW ON	Air conditioning ON	8 – 14
T – E1	IG SW ON	Check connector TE1 – E1 not connected	10 – 14
T – E1	IG SW ON	Check connector TE1 – E1 connected	1 or less
B/K – E1	Stop light SW ON (Brake pedal depressed)		10 – 14

Engine ECU Terminals

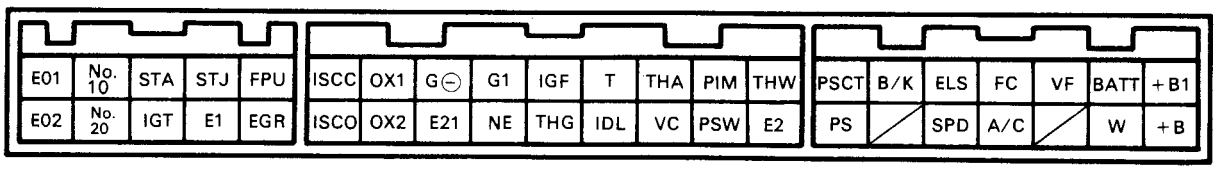

FI4065

Voltage at ECU Wiring Connectors (5S-FE A/T)

Terminals	Condition		STD voltage (V)
+B, +B1 – E1	IG SW ON		10 – 14
BATT – E1	–		10 – 14
IDL – E2	IG SW ON	Throttle valve open	8 – 14
VTA – E2	IG SW ON	Throttle valve fully closed (Throttle opener must be cancelled first)	0.8 – 1.2
		Throttle valve fully open	3.2 – 4.2
PIM – E2	IG SW ON		3.3 – 3.9
VC– E2	IG SW ON		4.5 – 5.5
No.10 – E01, No.20 – E02	IG SW ON		10 – 14
THA – E2	IG SW ON	Intake air temp. 20°C (68°F)	1.7 – 3.1
THW – E2	IG SW ON	Coolant temp. 80°C (176°F)	0.3 – 0.8
STA – E1	Cranking		6 – 14
IGT – E1	Cranking or idling		0.8 – 1.2
ISCC, ISCO – E1	IG SW ON		8 – 14
W – E1	No trouble ("CHECK" engine warning light off) and engine running		10 – 14
A/C – E1	IG SW ON	Air conditioning ON	8 – 14
ACT – E1	IG SW ON	Air conditioning ON	4.5 – 5.5
T – E1	IG SW ON	Check connector TE1 – E1 not connected	10 – 14
		Check connector TE1 – E1 connected	1 or less
NSW – E1	IG SW ON	Neutral start switch P or N range	0 – 2
		Ex. neutral start switch P or N range	6 – 14
B/K – E1	Stop light SW ON (Brake Pedal depressed)		10 – 14

Engine & ECT ECU Terminals

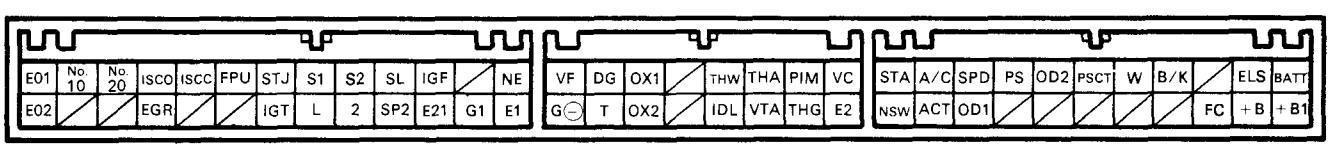

FI2796

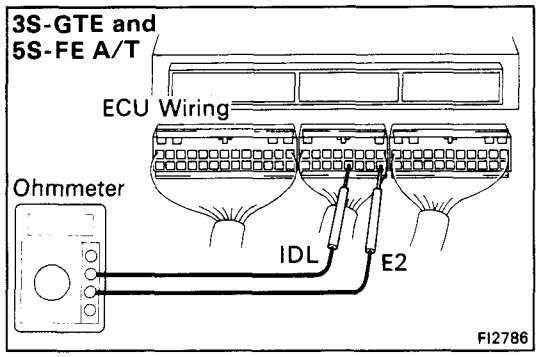

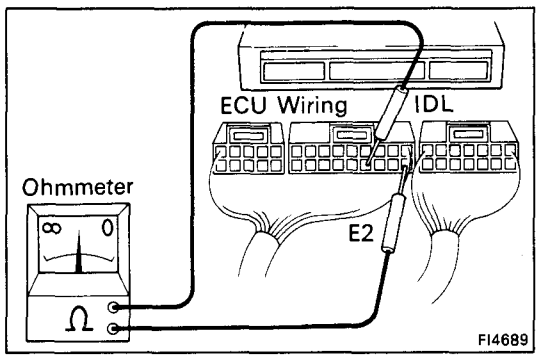

2. **INSPECT RESISTANCE OF ECU**

NOTICE:

- **Do not touch the ECU terminals.**
- **The tester probe should be inserted into the wiring connector from the wiring side.**

Check the resistance between each terminal of the wiring connectors.

- Disconnect the connectors from the ECU.
- Measure the resistance at each terminal.

Resistance of ECU Wiring Connectors (3S-GTE)

Terminals	Condition	STD resistance (Ω)
IDL – E2	Throttle valve open	Infinity
	Throttle valve fully closed	2,300 or less
VTA – E2	Throttle valve fully open	3,500 – 10,000
	Throttle valve fully closed	200 – 800
VC – E2	–	200 – 400
VS – E2	Measuring plate fully closed	200 – 600
	Measuring plate fully open	20 – 1,200
THA1 – E2	Intake air temp. 20°C (68°F)	2,000 – 3,000
THW – E2	Coolant temp. 80°C (176°F)	200 – 400
G1, G2 – G ⊖	–	140 – 180
NE – G ⊖	–	180 – 220
RSC, RSO – +B, +B1	–	17.7 – 23.9

Engine ECU Terminals

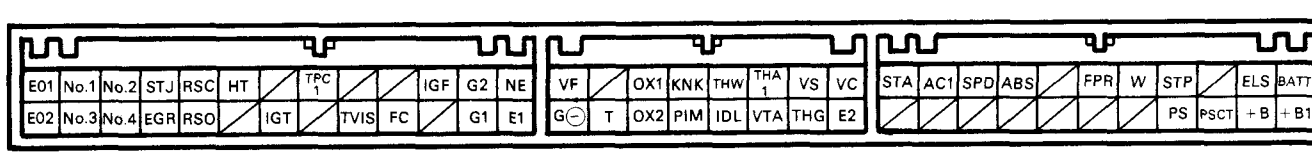

FI2796

Resistance of ECU Wiring Connectors (5S-FE M/T)

Terminals	Condition	STD resistance (Ω)
IDL – E1	Throttle valve open	Infinity
	Throttle valve fully closed (Throttle opener must be cancelled first)	0
PSW – E1	Throttle valve fully open	0
	Throttle valve fully closed (Throttle opener must be cancelled first)	Infinity
THA – E2	Intake air temp. 20°C (68°F)	2,000 – 3,000
THW – E2	Coolant temp. 80°C (176°F)	200 – 400
G1, NE – G⊖	–	170 – 210
ISCC, ISCO – +B, +B1	–	19.3 – 22.3

Engine ECU Terminals

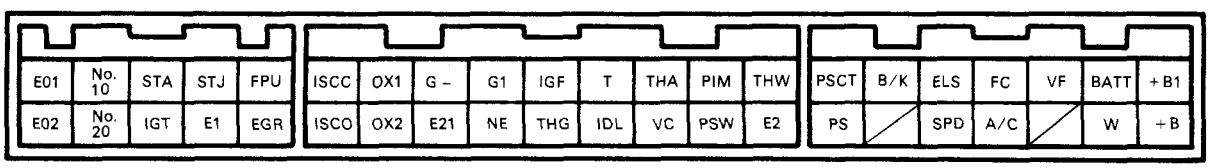

FI4065

Resistance of ECU Wiring Connectors (5S-FE A/T)

Terminals	Condition	STD resistance (Ω)
IDL – E2	Throttle valve open	Infinity
	Throttle valve fully closed (Throttle opener must be cancelled first)	2,300 or less
VTA – E2	Throttle valve fully open	2,300 – 10,000
	Throttle valve fully closed (Throttle opener must be cancelled first)	200 – 800
VC – E2	–	3,000 – 7,000
THA – E2	Intake air temp. 20°C (68°F)	2,000 – 3,000
THW – E2	Coolant temp. 80°C (176°F)	200 – 400
G1, NE – G⊖	–	170 – 210
ISCC, ISCO – +B, +B1	–	19.3 – 22.3

Engine & ECT ECU Terminals

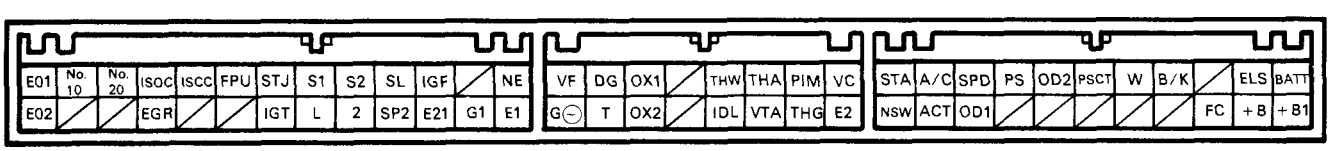

FI2796

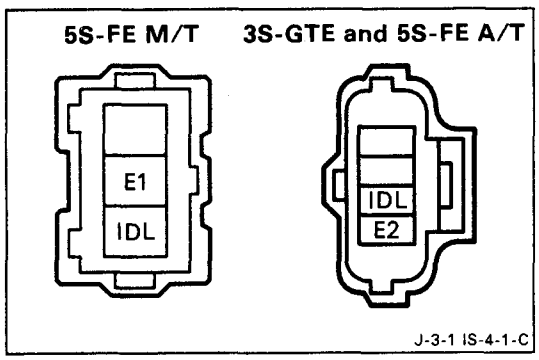

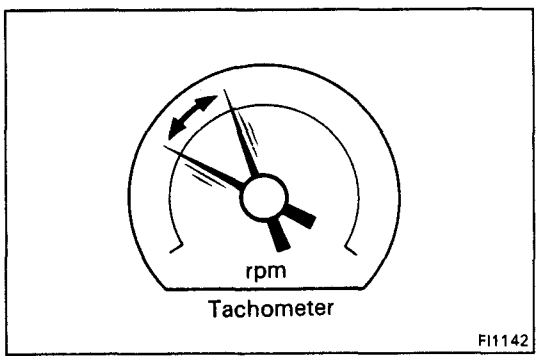

Fuel Cut RPM

INSPECTION OF FUEL CUT RPM

1. **WARM UP ENGINE**

   Allow the engine to warm up to normal operating temperature.

2. **INSPECT FUEL CUT RPM**

   (a) Disconnect the connector from the throttle position sensor.

   (b) Connect terminals IDL and E1 (5S-FE M/T) or E2 (3S-GTE and 5S-FE A/T) of the wiring connector.

   (c) Gradually raise the engine rpm and check that there is fluctuation between the fuel cut and fuel return points.

   HINT:
   - The vehicle should be stopped.
   - Measure with the A/C OFF.

Fuel cut rpm:	**3S-GTE**	**2,000 rpm**
	5S-FE	**1,600 rpm**
Fuel return rpm:	**3S-GTE**	**1,600 rpm**
	5S-FE	**1,500 rpm**

COOLING SYSTEM

	Page
DESCRIPTION	CO-2
TROUBLESHOOTING	CO-4
ENGINE COOLANT CHECK	CO-4
REPLACEMENT OF ENGINE OF COOLANT	CO-5
WATER PUMP	CO-10
THERMOSTAT	CO-14
RADIATOR	CO-16
ELECTRIC COOLING FANS	CO-21
Radiator Cooling Fans (w/ A/C)	CO-21
Radiator Cooling Fan (w/o A/C)	CO-28
Engine Compartment Cooling Fan (3S-GTE)	CO-31

DESCRIPTION

This engine utilizes a pressurized forced circulation cooling system which includes a thermostat equipped with a by-pass valve mounted on the inlet side.

3S-GTE

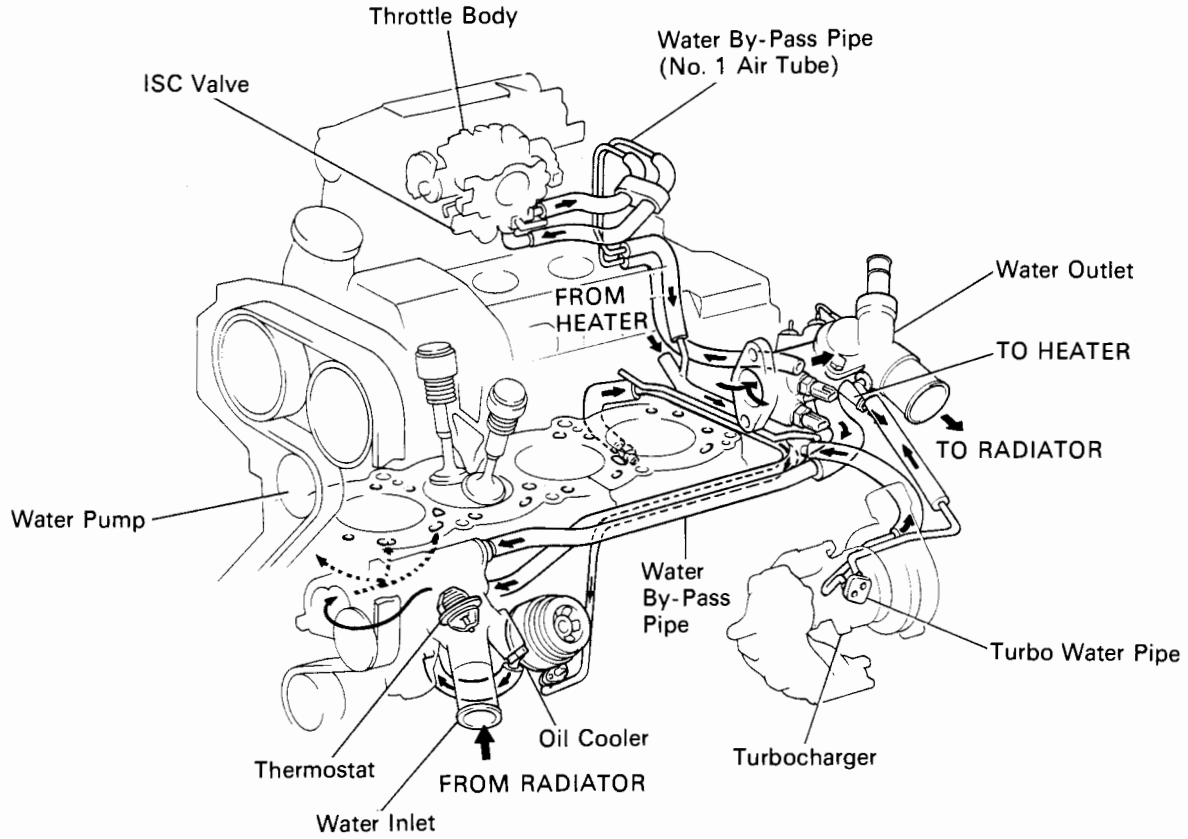

CO0980

5S-FE

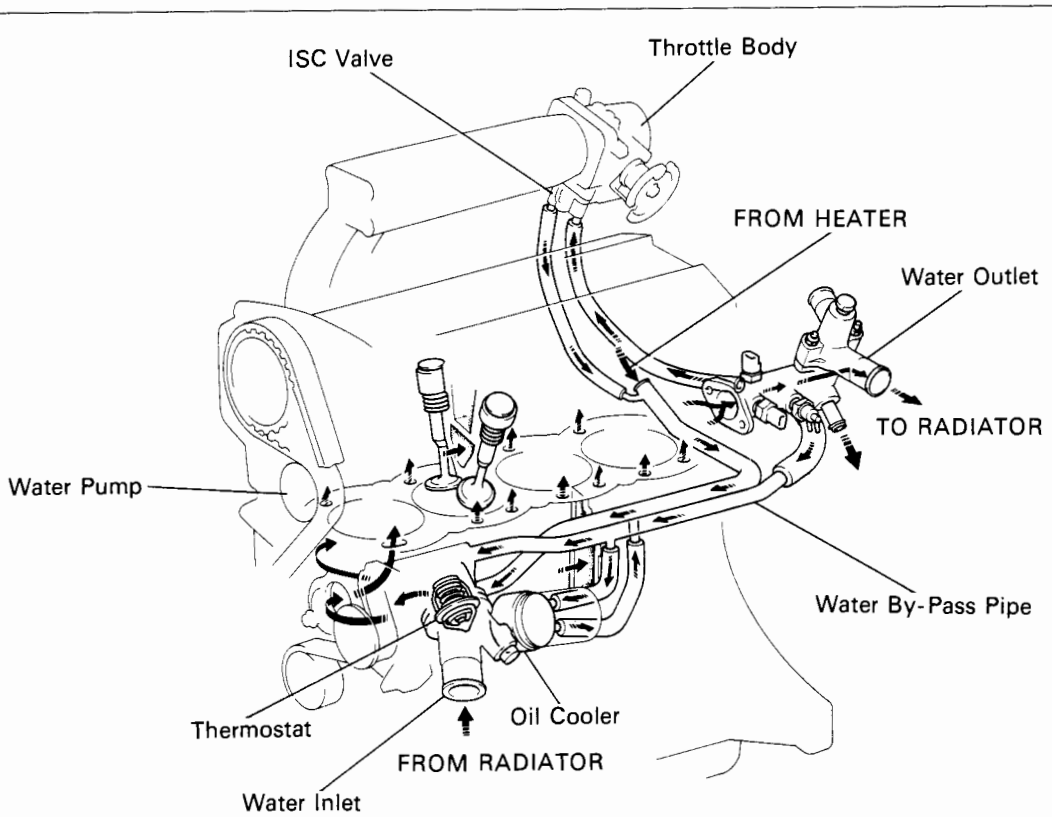

CO0981

The cooling system is composed of the water jacket (inside the cylinder block and cylinder head), radiator, water pump, thermostat, electric fan, hoses and other components.

Coolant which is heated in the water jacket is pumped to the radiator, through which an electric fan blows air to cool the coolant as it passes through. Coolant which has been cooled is then sent back to the engine by the water pump, where it cools the engine.

The water jacket is a network of channels in the shell of the cylinder block and cylinder head through which coolant passes. It is designed to provide adequate cooling of the cylinders and combustion chambers which become heated during engine operation.

RADIATOR

The radiator performs the function of cooling the coolant which has passed through the water jacket and become hot, and it is mounted in the front of the vehicle. The MR2 radiator is different from that in other models, in that it is a cross flow type in which the coolant flows horizontally. It includes side tanks and a core which connects them. The inlet for coolant from the water jacket and the drain cock for draining out coolant are located in the left tank. The outlet coolant and an air drain, which facilitates the supply of coolant to the engine are located in the right tank. The core contains many tubes through which coolant flows from left tank to the right tank as well as cooling fins which rediate heat away from the coolant in the tubes. Air sucked in by the electric cooing fan, as well as the wind generayed by the vehicle's travel, passes through the radiator, cooling the coolant heated by the water jecket as it passes through the tubes in the core. Models with automatic transmission include an automatic transmission fluid cooler incorpo rated into the cooling pipes. A fan with an electric motor is mounted behind the radiator to assist the flow of air through the radiator. The fan operates when the coolant temperature becomes high in order to prevent it from becoming too high.

RADIATOR CAP

The radiator cap is a pressure type cap which seals the radiator, resulting in pressurization of the radiator as the coolant expands. The pressurization prevents the coolant from boiling even when the coolant temperature exceeds 100°C (212°F). A relief valve (pressurization valve) and a vacuum valve (negative pressure valve) are built into the radiator cap. The relief valve opens and lets steam escape through the overflow pipe when the pressure generated inside the cooling system exceeds the limit (coolant temperature: 110 – 120°C, 230 – 248°F, pressure; 0.3 – 1.0 kg/cm^2, 4.3 – 14.2 psi, 29.4 – 98.1 kPa). The vacuum valve opens to alleviate the vacuum which develops in the coolant system after the engine is stopped and the coolant temperature drops. The valve's opening allows the coolant in the reservoir tank to return to the cooling system.

RESERVOIR TANK

The reservoir tank is used to catch coolant which overflows the cooling system as a result of volumetric expansion when the coolant is heated. The coolant in the reservoir tank returns to the radiator when the coolant temperature drops, thus keeping the radiator full at all times and avoiding needless coolant loss. Check the reservoir tank level to learn if the coolant needs to be replenished.

WATER PUMP

The water pump is used for forced circulation of coolant through the cooling system. It is mounted on the front of the cylinder block and driven by a timing belt.

THERMOSTAT

The thermostat has a wax type by-pass valve and is mounted in the water inlet housing. The thermostat includes a type of automatic valve operated by fluctuations in the coolant temperature. This valve closes when the coolant temperature drops, preventing the circulation of coolant through the engine and thus permitting the engine to warm up rapidly. The valve opens when the coolant temperature has risen, allowing the circulation of coolant. Wax inside the thermostat expands when heated and contracts when cooled. Heating the wax thus generates pressure which overpowers the force of the spring which keeps the valve closed, thus opening the valve. When the wax cools, its contraction causes the force of the spring take effect once more, closing the valve. The thermostat in this engine operates at a temperature of 82°C (180°F).

TROUBLESHOOTING

Problem	Possible cause	Remedy	Page
Engine overheats	Dirt, leaves or insects in radiator or condenser	Clean radiator or condenser	CO-16
	Hoses, water pump, thermostat housing, radiator, heater, core plugs or head gasket leakage	Repair as necessary	
	Thermostat faulty	Check thermostat	CO-14
	Incorrect ignition timing	Reset timing	IG-17, 22
	Electric cooling system faulty	Inspect electric cooling system	CO-22, 33
	Radiator hose plugged or rotted	Replace hose	
	Water pump faulty	Replace water pump	CO-10
	Radiator plugged or cap faulty	Check radiator and cap	CO-16
	Cylinder head or block cracked or water passage clogged	Repair as necessary	

HINT: Removal of the thermostat would have an adverse effect, causing a lowering of cooling efficiency. Do not remove the thermostat, even if the engine tends to overheat.

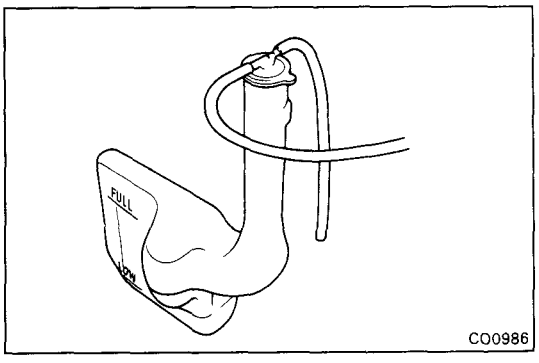

CO0986

ENGINE COOLANT CHECK

1. **CHECK ENGINE COOLANT LEVEL AT RESERVE TANK**

   The coolant level should be between the "LOW" and "FULL" lines.

   If low, check for leaks and add coolant up to the "FULL" line.

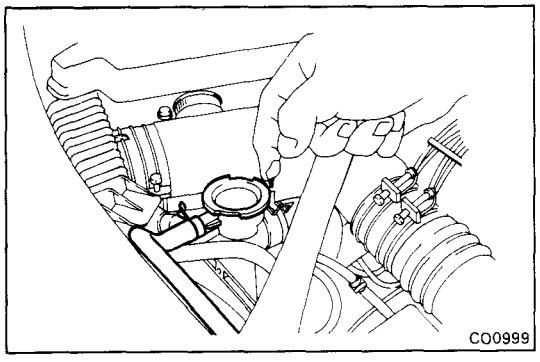
CO0999

2. **CHECK ENGINE COOLANT QUALITY**

   There should not be any excessive deposits of rust or scales around the radiator (water filler) cap or water filler hole, and the coolant should be free from oil.

   If excessively dirty, replace the coolant.

REPLACEMENT OF ENGINE COOLANT

ENGINE COOLANT CIRCUIT

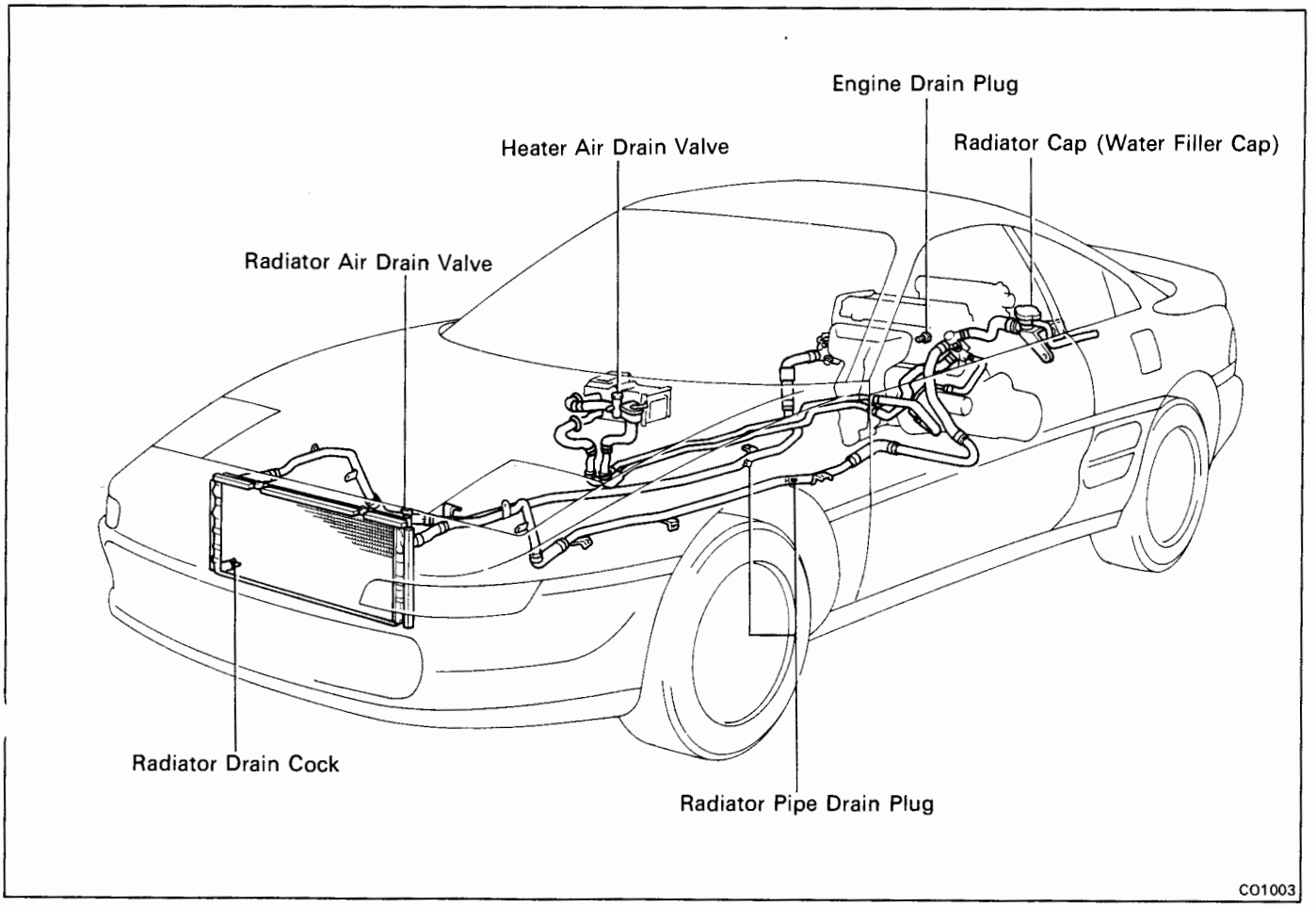

NOTICE:

- **To avoid the danger of burns, do not begin work until the engine and coolant are properly cooled down.**
- **To ensure that coolant is poured in properly, perform the operation at a level area. Performing work with the vehicle inclined may cause improper removal of coolant or improper air removal when pouring coolant.**
- **When replacement has been performed, check the water level in the water filler and reservoir tank once or twice within 500 km (311 miles) of driving or within one week.**

DRAINAGE OF ENGINE COOLANT

1. REMOVE REAR FUEL TANK PROTECTOR

2. REMOVE FRONT LUGGAGE UNDER COVERS

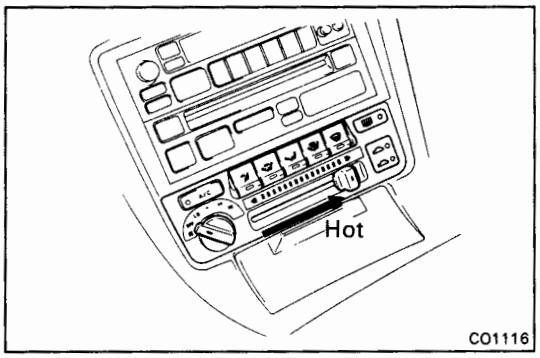

3. DRAIN ENGINE COOLANT

(a) Set the heater control lever to hot.

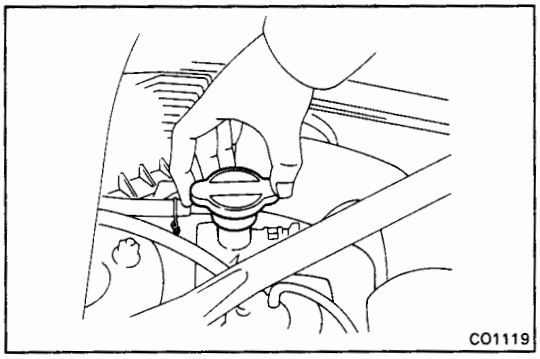

(b) Remove the radiator cap.

CAUTION: To avoid the danger of being burned, do not remove the radiator cap while the engine and radiator are still hot, as fluid and steam can be blown out under pressure.

(c) Drain the coolant from the radiator cock and engine drain plug (engine drain plug are at the rear left of engine block) and two radiator pipe plugs.

(d) Close the drain cocks.

Torque:

Engine drain plug	
3S-GTE	**250 kg-cm (18 ft-lb, 25 N·m)**
5S-FE	**130 kg-cm (9 ft-lb, 13 N·m)**
Radiator drain plug	**170 kg-cm (12 ft-lb, 17 N·m)**

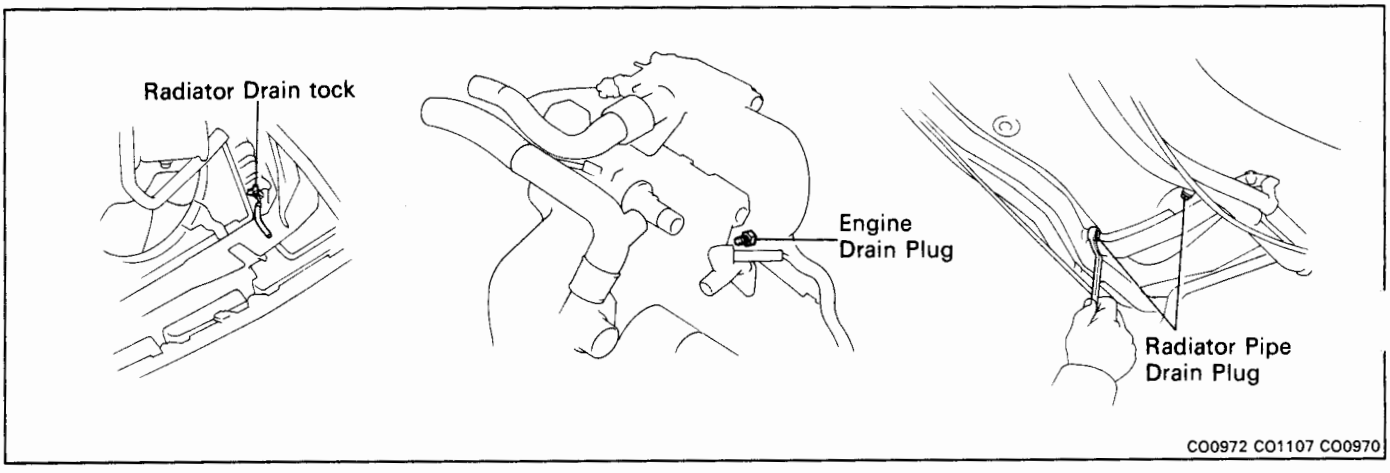

REFILL OF ENGINE COOLANT

1. **REMOVE SPARE TIRE**
2. **REMOVE FRONT LUGGAGE COMPARTMENT TRIM**
3. **REMOVE UPPER RADIATOR SUPPORT SEAL**

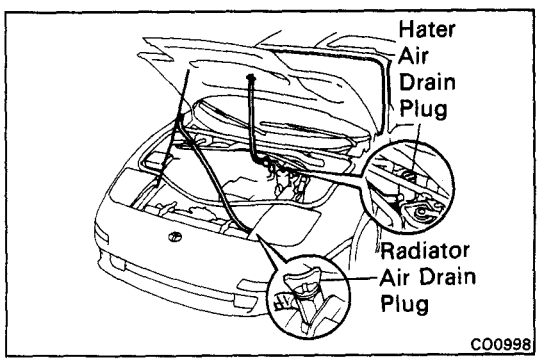

4. **SET SERVICE HOSES**
   (a) Connect the service hoses to the radiator air drain and heater valve.
   (b) Suspend the opposite end to the service hose connected to radiator air drain to the front hood stay.
   (c) Suspend the opposite end to the service hose connected to heater valve to the front hood.

   NOTICE: Do not close-off or pinch any of the service hoses.

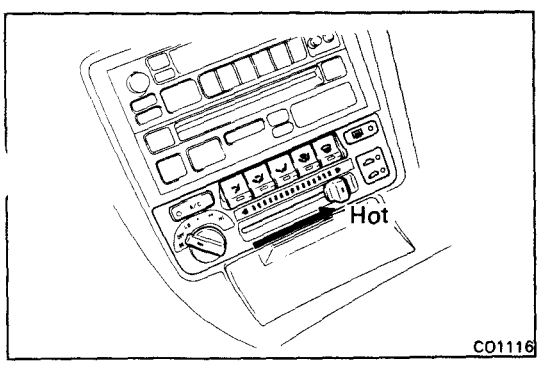

5. **FILL WITH ENGINE COOLANT**
   (a) Set the heater control lever to hot.

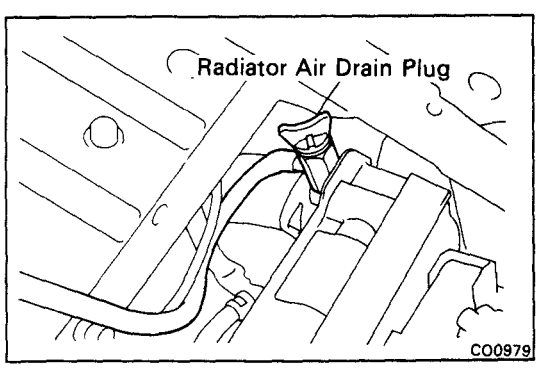

   (b) Open the radiator and heater air drain plugs above three turns.

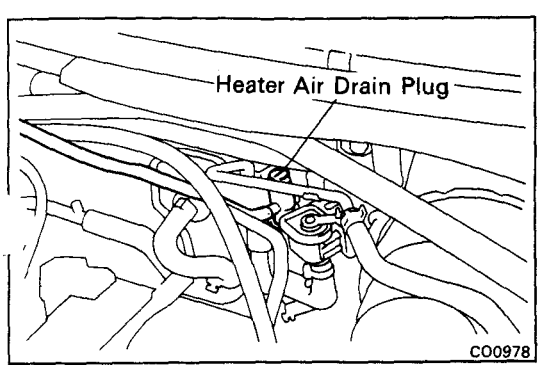

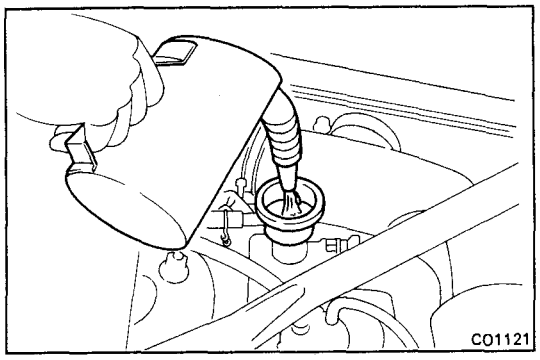

(c) Slowly fill the water filler with coolant.

- Use a good brand of ethylene-glycol base coolant, mixed according to the manufacturer's directions.
- Using coolant which includes more than 50 % ethylene-glycol (but not more than is recommended).

NOTICE:

- **Do not use alcohol type coolant.**
- **The coolant should be mixed with demineralized water or distilled water.**

Capacity (w/ Heater):

3S-GTE	**13.6 liters (14.4 US qts, 12.0 Imp. qts)**
5S-FE	**13.0 liters (13.7 US qts, 11.4 Imp. qts)**

(d) Check that air is absent from the air drain plugs of the radiator and heater while filling the water filler inlet to the top with coolant.

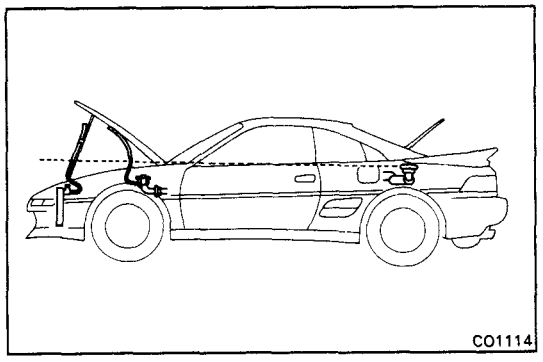

(e) Visually check that the level of coolant in the air drain service hoses of the radiator and heater are the same as in the water filler.

NOTICE: If the water level in the air drain service hose is clearly lower, air removal has been incomplete so check if the service hose is crushed or bent, them perform step (c).

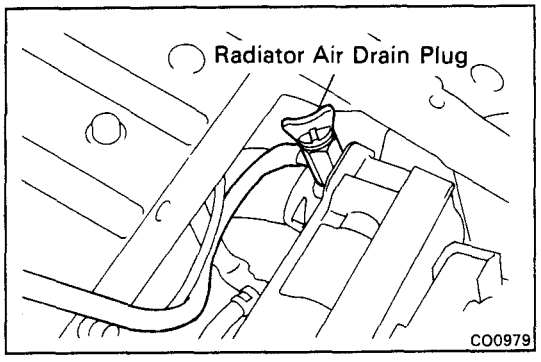

(f) When the coolant level in the air drain service hoses stops dropping, close the air drain plugs of the radiator and heater.

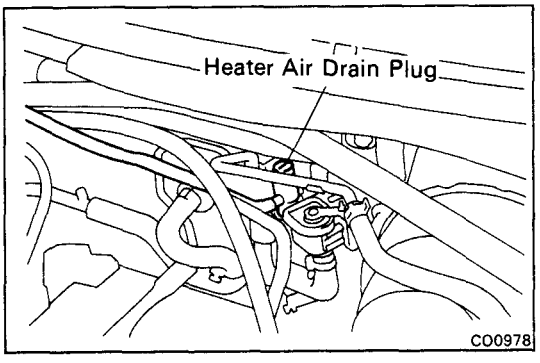

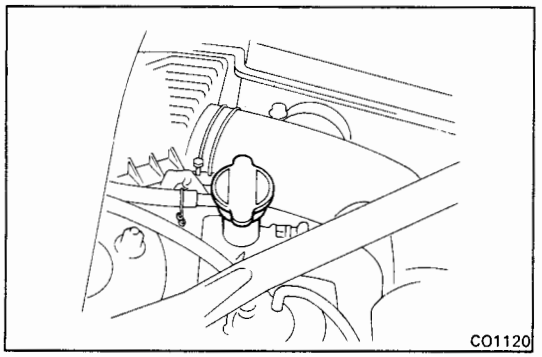

(g) Fasten the radiator cap to the first stop point.

NOTICE: Do not tighten the radiator cap completely (to the second stop point).

(h) Start the engine and run at fast idle for approx. 3 minutes, and stop the engine.

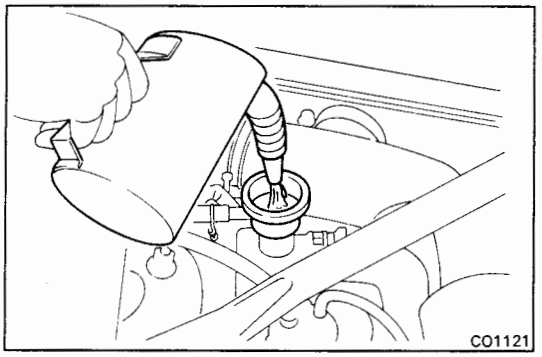

(i) Add more coolant and repeat steps (h) and (i).

HINT: By performing steps (h) and (i), 0.2 – 0.5 liters (0.2 – 0.5 US qts, 0.2 – 0.4 Imp. qts) can normally be added.

(j) Check that the coolant level in the water filler has not dropped.

If the coolant level has dropped, add coolant and repeat the steps from (g) onward.

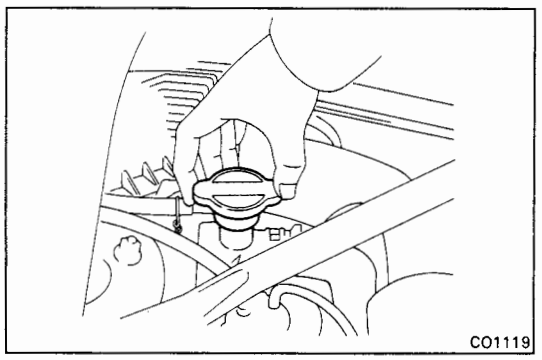

(k) Completely tighten the radiator cap.

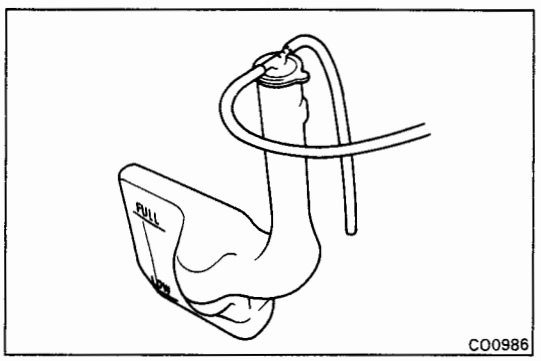

(l) Fill coolant into the reservoir tank up to the "FULL" line.

6. **INSTALL UPPER RADIATOR SUPPORT SEAL**
7. **INSTALL FRONT LUGGAGE COMPARTMENT TRIM**
8. **INSTALL SPARE TIRE**
9. **INSTALL REAR FUEL TANK PROTECTOR**
10. **INSTALL FRONT LUGGAGE UNDER COVERS**

WATER PUMP

COMPONENTS

3S-GTE

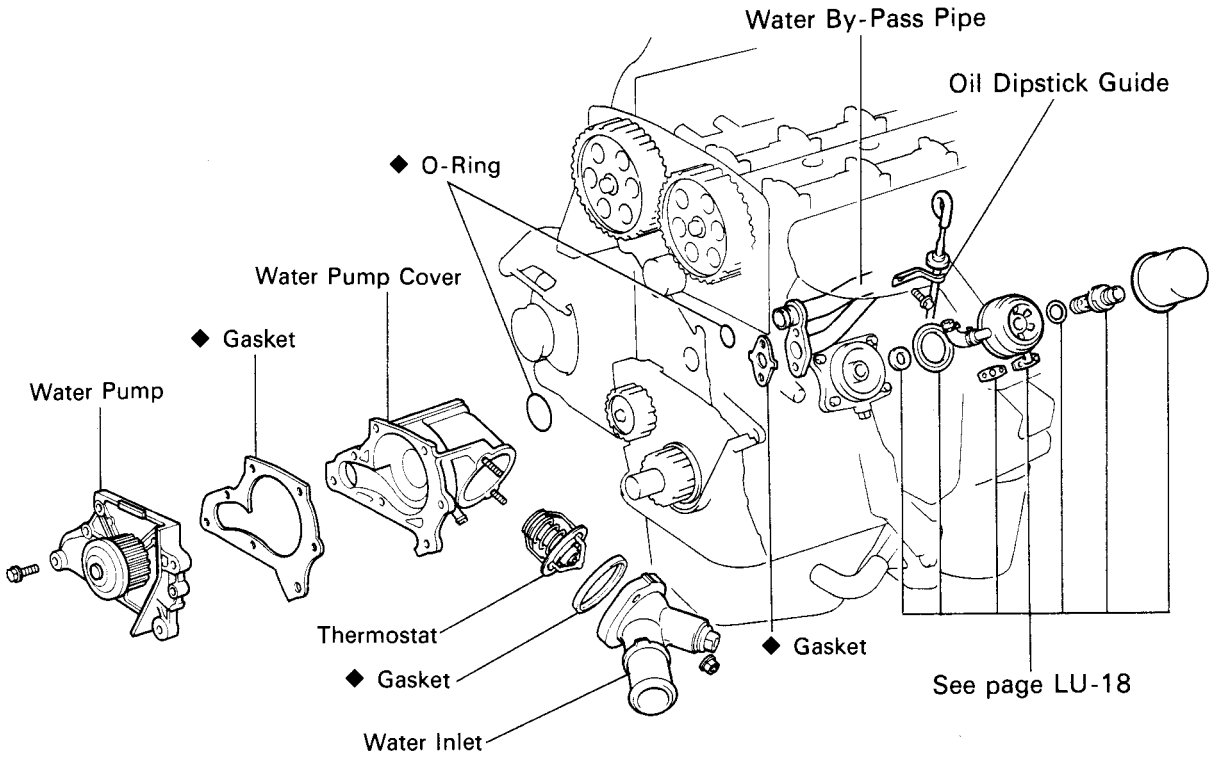

◆ Non-reusable part

CO1117

5S-FE

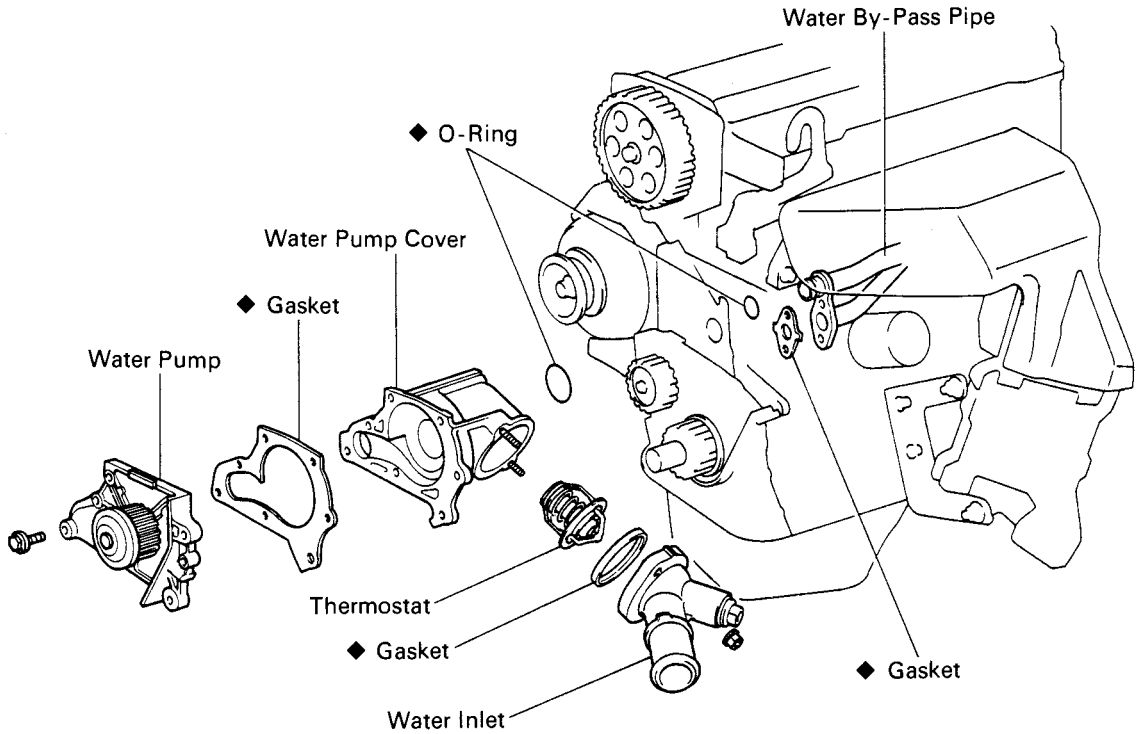

◆ Non-reusable part

CO1113

REMOVAL OF WATER PUMP

(See page CO-10)

1. **DRAIN ENGINE COOLANT (See page CO-6)**

2. **DISCONNECT RADIATOR HOSE FROM WATER INLET**

3. **REMOVE TIMING BELT**
   3S-GTE (See steps 1 to 25 on pages EM-26 to 31)
   5S-FE (See steps 1 to 21 on pages EM-47 to 52)

4. **(5S-FE)**
   REMOVE A/C COMPRESSOR IDLER PULLEY
   (See steps 31 ((b) to (d)) on page EM-187)

5. **REMOVE NO.2 IDLER PULLEY**
   3S-GTE (See step 27 on page EM-32)
   5S-FE (See step 23 on page EM-52)

6. **(5S-FE)**
   REMOVE TIMING BELT TENSION SPRING

7. **(3S-GTE)**
   REMOVE OIL COOLER
   (See steps 7 to 10 on pages EM-18 and 19)

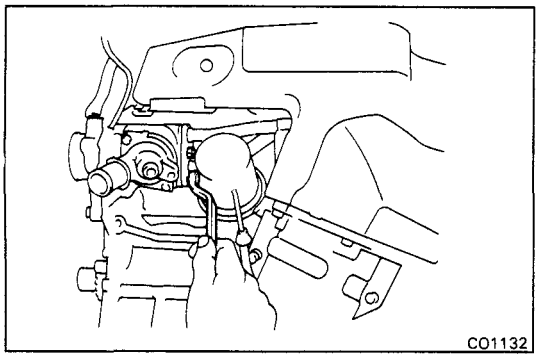

8. **REMOVE WATER PUMP AND WATER PUMP COVER ASSEMBLY**
   (a) Remove the two nuts holding the water pump to the water by-pass pipe.

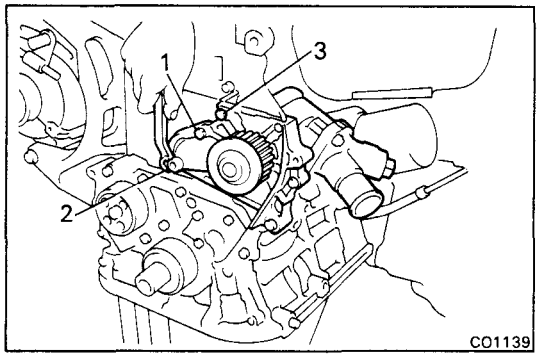

   (b) Remove the three bolts in the sequence shown.
   (c) Pull out the water pump together with the water pump cover.
   (d) Remove the gasket and two O-rings from the water pump and water by-pass pipe.

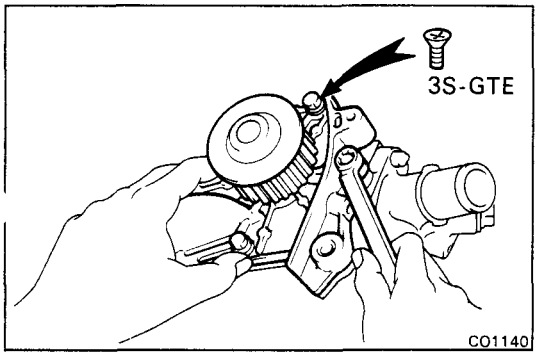

9. **SEPARATE WATER PUMP AND WATER PUMP COVER**
   Remove the three bolts, water pump and gasket from the water pump cover.

10. **REMOVE WATER INLET AND THERMOSTAT FROM WATER PUMP COVER (See step 4 on page CO-14)**

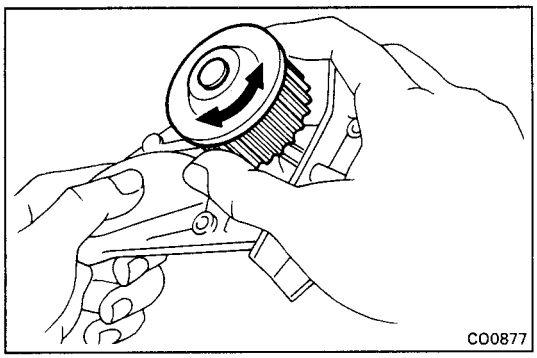

INSPECTION OF WATER PUMP

INSPECT WATER PUMP

Turn the pulley and check that the water pump bearing moves smoothly and quietly.

INSTALLATION OF WATER PUMP

(See page CO-10)

1. **INSTALL THERMOSTAT AND WATER INLET TO WATER PUMP COVER**
   (See steps 1 and 2 on page CO-15)

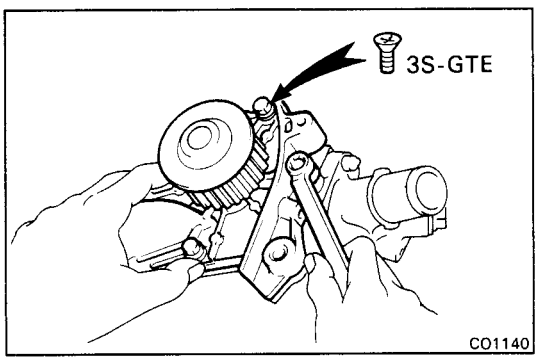

2. **ASSEMBLE WATER PUMP AND WATER PUMP COVER**

   Install a new gasket and the water pump to the pump cover with the three bolts.

   Torque: 95 kg-cm (82 in.-lb, 9.3 N·m)

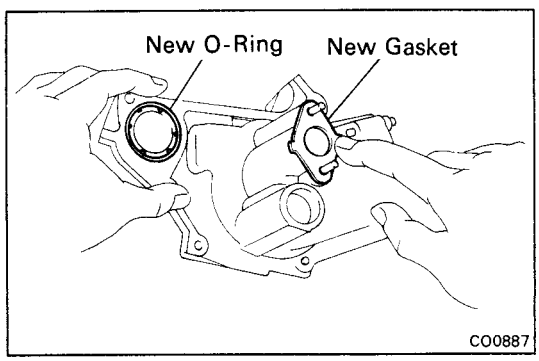

3. **INSTALL WATER PUMP AND WATER PUMP COVER ASSEMBLY**

   (a) Install new O-ring and gasket to the water pump cover.

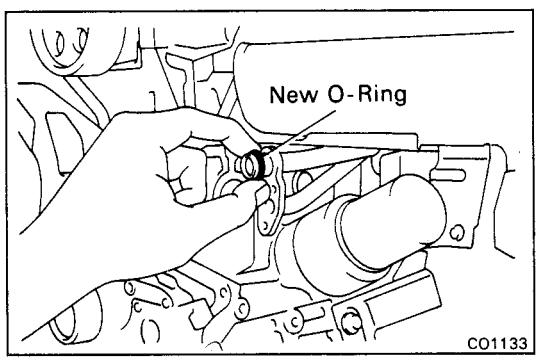

   (b) Install a new O-ring to the water by-pass pipe.

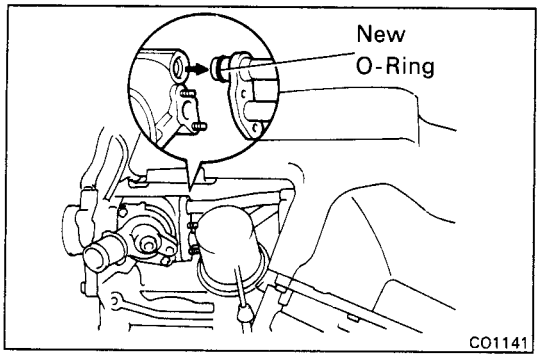

(c) Apply soapy water to the O-ring on the water by-pass pipe.

(d) Connect the pump cover to the water by-pass pipe. Do not install the nuts yet.

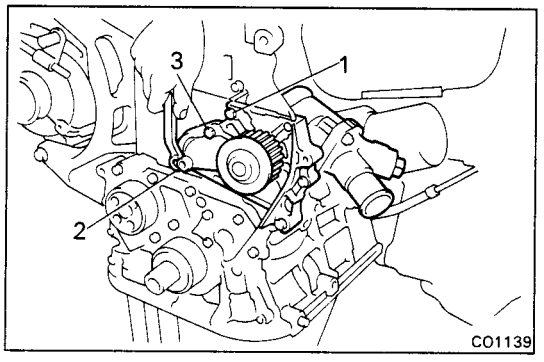

(e) Install the water pump with the three bolts. Tighten the bolts in the sequence shown.

Torque:

3S-GTE	**80 kg-cm (69 in.-lb, 8.0 N·m)**
5S-FE	**95 kg-cm (82 in.-lb, 9.3 N·m)**

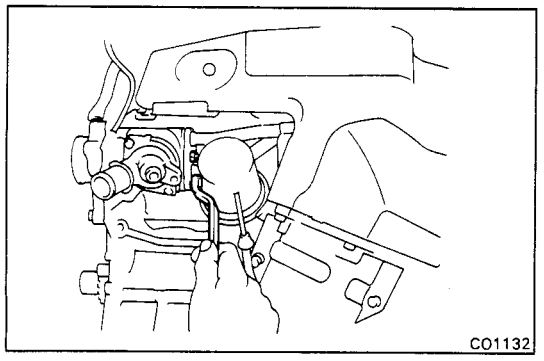

(f) Install the two nuts holding the water pump cover to the water by-pass pipe.

Torque:

3S-GTE	**120 kg-cm (9 ft-lb, 12 N·m)**
5S-FE	**95 kg-cm (82 in.-lb, 9.3 N·m)**

4. **(3S-GTE)**
   INSTALL OIL COOLER
   (See steps 2 to 5 on pages LU-21 and 22)

5. **(5S-FE)**
   INSTALL TIMING BELT TENSION SPRING

6. **INSTALL NO.2 IDLER PULLEY**
   3S-GTE (See step 3 on page EM-35)
   5S-FE (See step 3 on page EM-55)

7. **(5S-FE)**
   INSTALL A/C COMPRESSOR IDLER PULLEY
   (See step 13 ((b) to (e)) on page EM-221)

8. **INSTALL TIMING BELT**
   3S-GTE (See steps 5 to 32 on pages EM-35 to 41)
   5S-FE (See steps 5 to 26 on pages EM-55 to 60)

9. **CONNECT RADIATOR HOSE TO WATER INLET**

10. **FILL WITH ENGINE COOLANT (See page CO-7)**

THERMOSTAT

REMOVAL OF THERMOSTAT

1. **DRAIN ENGINE COOLANT (See page CO-6)**

2. **DISCONNECT RADIATOR HOSE FROM WATER INLET**

3. **(3S-GTE)**
   DISCONNECT OIL DIPSTICK GUIDE FROM WATER INLET (See step 8 on page LU-19)

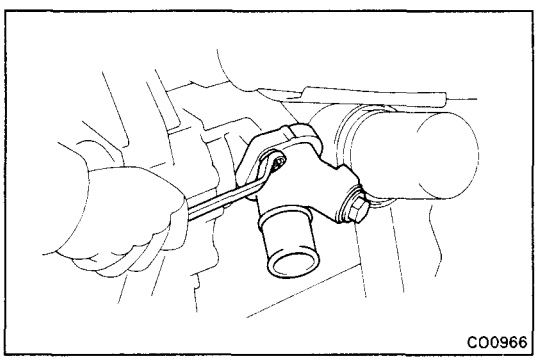

4. **REMOVE WATER INLET AND THERMOSTAT**
   (a) Remove the two nuts and water inlet from the water pump.
   (b) Remove the thermostat.
   (c) Remove the gasket from the thermostat.

INSPECTION OF THERMOSTAT

INSPECT THERMOSTAT

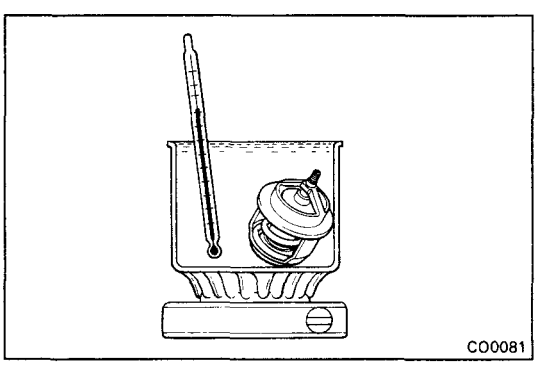

HINT: The thermostat is numbered with the valve opening temperature.

(a) Immerse the thermostat in water and gradually heat the water.

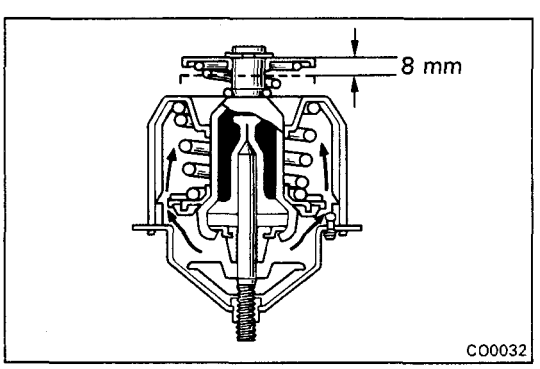

(b) Check the valve opening temperature.

Valve opening temperature:
80 – 84°C (176 – 183°F)

If the valve opening temperature is not as specified, replace the thermostat.

(c) Check the valve lift.

Valve lift:
8 mm (0.31 in.) or more at 95°C (203°F)

If the valve lift is less than specification, replace the thermostat.

(d) Check that the valve spring is tight when the thermostat is fully closed.

If necessary, replace the thermostat.

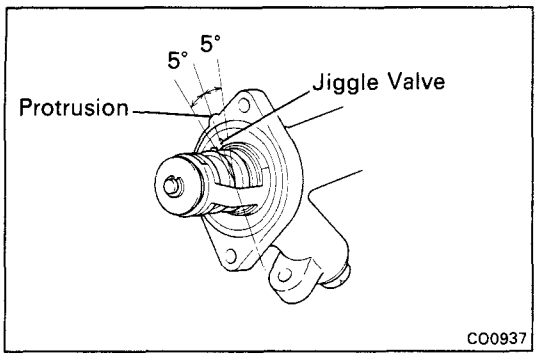

INSTALLATION OF THERMOSTAT

1. **PLACE THERMOSTAT IN WATER PUMP**
   (a) Install a new gasket to the thermostat.
   (b) Align the jiggle valve of the thermostat with the upper side of thestud bolt, and insert the thermostat in the water pump.

   HINT: The jiggle valve may be set within 5° of either side of the precribed position.

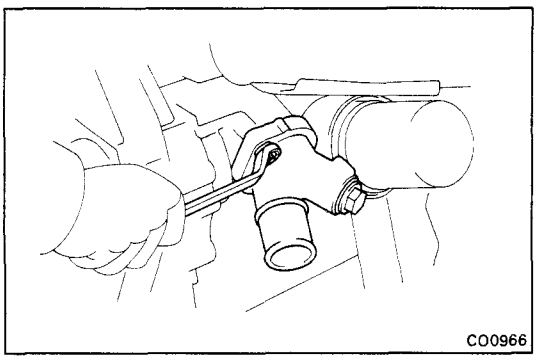

2. **INSTALL WATER INLET**
   Install the water inlet with the two nuts.

   Torque:

3S-GTE	**80 kg-cm (69 in.-lb, 7.8 N·m)**
5S-FE	**90 kg-cm (78 in.-lb, 8.8 N·m)**

3. **(3S-GTE)**
   CONNECT OIL DIPSTICK GUIDE TO WATER INLET
   (See step 4 on page LU-22)

4. **CONNECT RADIATOR HOSE TO WATER INLET**

5. **FILL WITH ENGINE COOLANT (See page CO-7)**

6. **START ENGINE AND CHECK FOR LEAKS**

RADIATOR

CLEANING OF RADIATOR

Using water or a steam cleaner, remove any mud and dirt from the radiator core.

NOTICE: If using a high pressure type cleaner, be careful not to deform the fins of the radiator core. If the cleaner nozzle pressure is 30 – 35 kg/cm² (427 – 498 psi, 2,942 – 3,432), keep a distance at least 40 – 50 cm (15.75 – 19.69 in.) between the radiator core and cleaner nozzle.

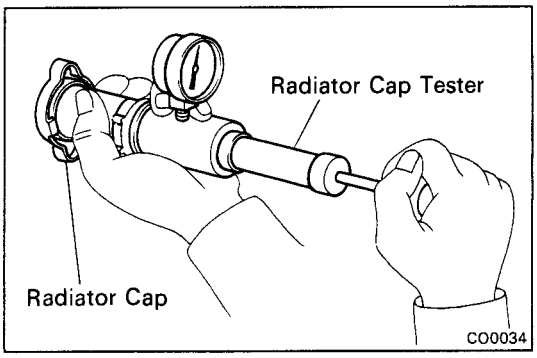

INSPECTION OF RADIATOR

1. **INSPECT RADIATOR (WATER FILLER) CAP**

   Using a radiator cap tester, pump the tester and measure the relief valve opening pressure.

   Standard opening pressure:
   0.75 – 1.05 kg/cm²
   (10.7 – 14.9 psi, 74 – 103 kPa)

   Minimum opening pressure:
   0.6 kg/cm² (8.5 psi, 59 kPa)

   If the opening pressure is less than minimum, replace the radiator cap.

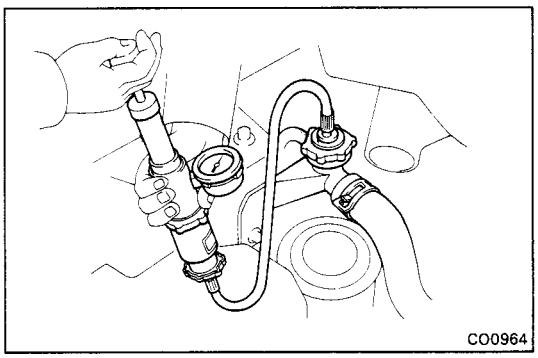

2. **INSPECT COOLING SYSTEM FOR LEAKS**

   (a) Fill the radiator with coolant and attach a radiator cap tester to the radiator (water filler) cap.

   (b) Warm up the engine.

   (c) Pump it to 1.2 kg/cm² (17.1 psi, 118 kPa), check that pressure does not drop.

   If the pressure drops, check for leaks on the hoses, radiator or water pump. If no external leaks are found, check the heater core, cylinder block and head.

REMOVAL OF RADIATOR

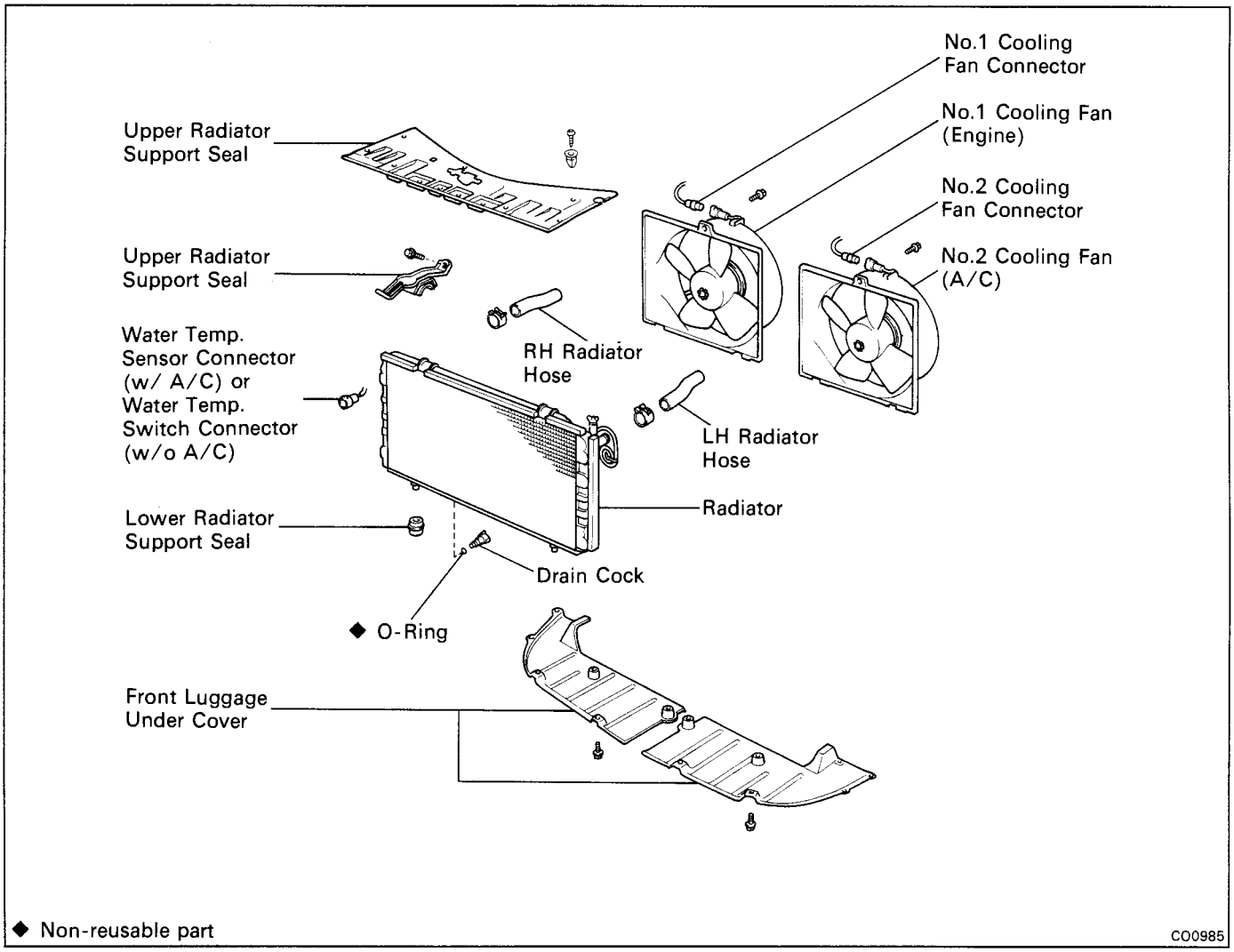

1. **DISCONNECT CABLE FROM NEGATIVE TERMINAL OF BATTERY**

   CAUTION: Work must be started after approx. 20 seconds or longer from the time the ignition switch is turned to the "LOCK" position and the negative (–) terminal cable is disconnected from the battery.

2. **REMOVE FRONT LUGGAGE UNDER COVERS**

3. **DRAIN ENGINE COOLANT (See page CO-6)**

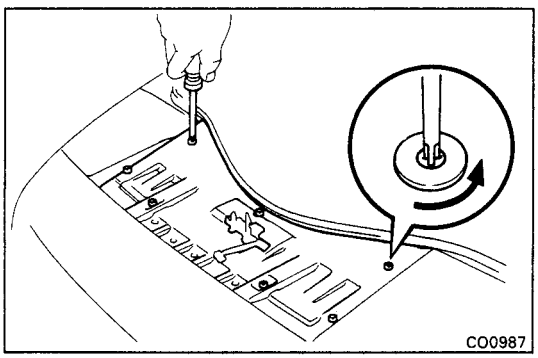

4. **REMOVE UPPER RADIATOR SUPPORT SEAL**

   Remove the seven clips and support seal.

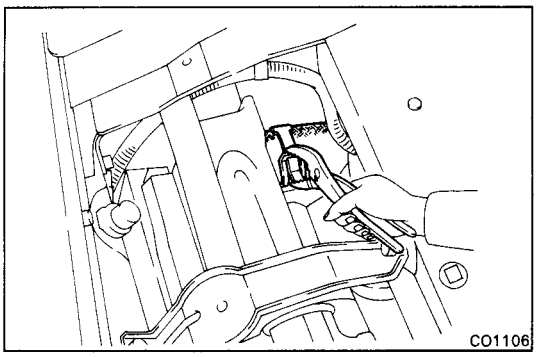

5. DISCONNECT RADIATOR HOSES

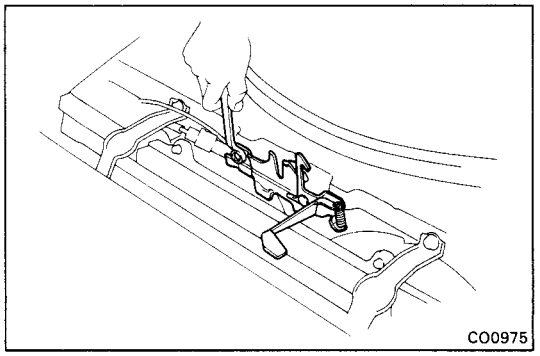

6. REMOVE FRONT HOOD LOCK

Remove the two bolts and hood lock.

7. DISCONNECT RADIATOR COOLING FAN CONNETORS

8. DISCONNECT WATER TEMPERATURE SENSOR (w/A/C) or SWITCH (w/o A/C) CONNECTOR

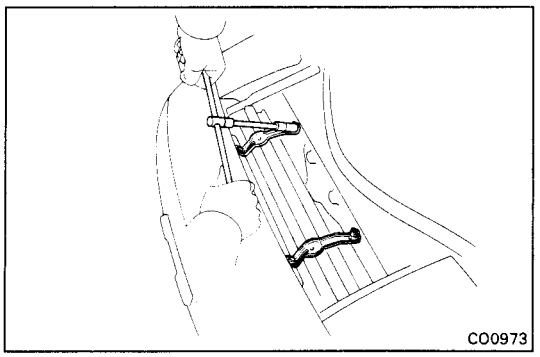

9. REMOVE RADIATOR AND COOLING FANS

(a) Remove the two bolts and upper support. Remove the two upper supports.

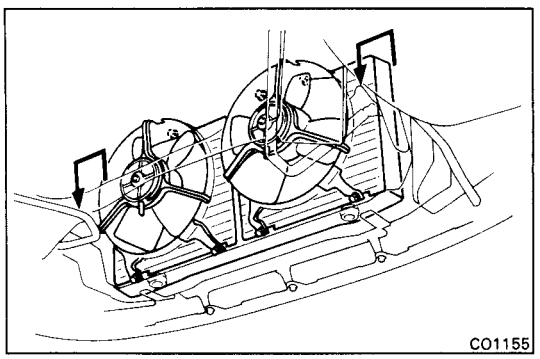

(b) Remove the radiator and two cooling fan assembly.

(c) Remove the two lower supports.

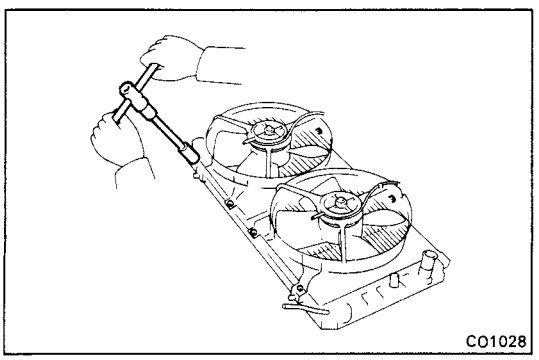

10. REMOVE NO.1 AND NO.2 COOLING FANS FROM RADIATOR

Remove the three bolts and cooling fan. Remove the two cooling fans.

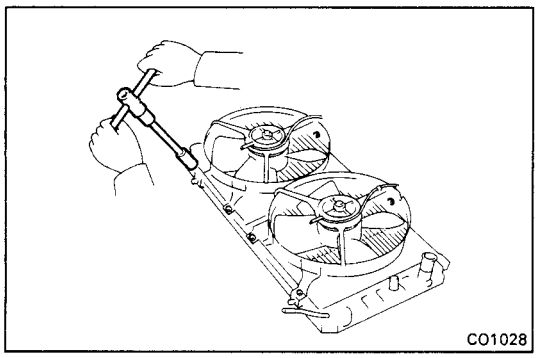

INSTALLATION OF RADIATOR

(See page CO-17)

1. INSTALL NO.1 AND NO.2 COOLING FANS TO RADIATOR

Install the cooling fan with the three bolts. Install the two cooling fans.

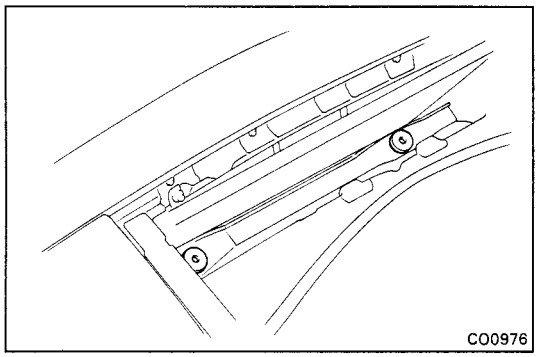

2. INSTALL RADIATOR AND COOLING FANS

(a) Place the two lower supports in position on the body.

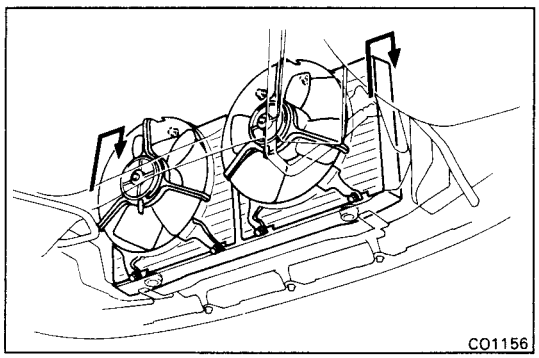

(b) Place the radiator and two cooling fan assembly in position on the body.

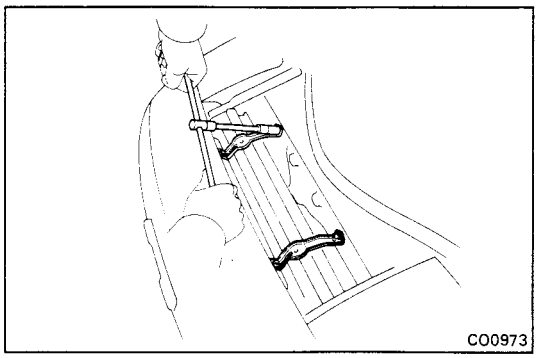

(c) Install the upper supports with the two bolts. Install the two upper supports.

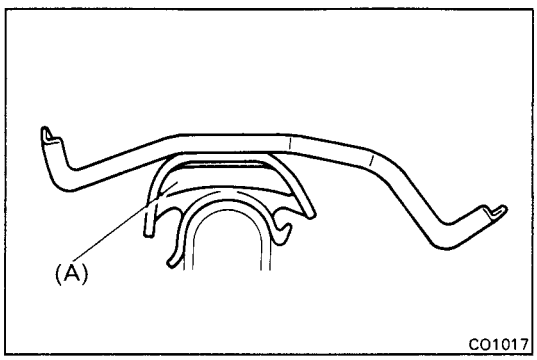

HINT: After installation, check that the rubber cushion (A) of the supports are not depressed.

3. CONNECT WATER TEMPERATURE SENSOR (w/ A/C) OR SWITCH (w/o A/C) CONNECTOR

4. CONNECT RADIATOR COOLING FAN CONNECTORS

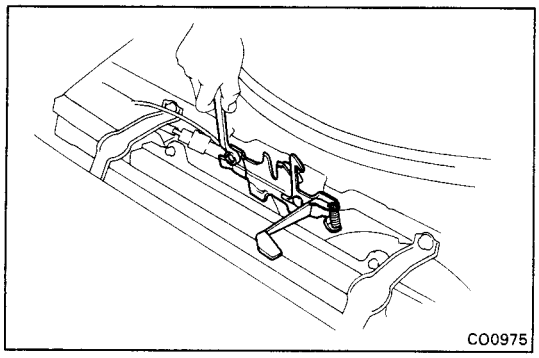

5. **INSTALL FRONT HOOD LOCK**
   Install the hood lock with the two bolts.

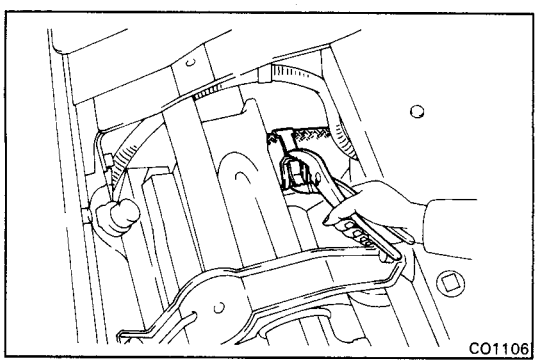

6. **CONNECT RADIATOR HOSES**
7. **CONNECT CABLE TO NEGATIVE TERMINAL OF BATTERY**
8. **FILL WITH ENGINE COOLANT (See page CO-7)**
9. **START ENGINE AND CHECK FOR LEAKS**

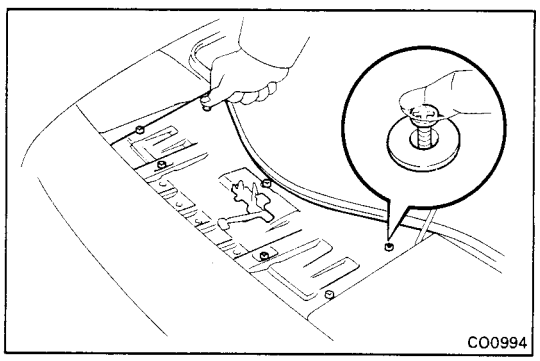

10. **INSTALL UPPER RADIATOR SUPPORT SEAL**
    Install the support seal with the seven clips.

11. **INSTALL FRONT LUGGAGE UNDER COVERS**

ELECTRIC COOLING FANS

Radiator Cooling Fans (w/ A/C)

SYSTEM CIRCUIT

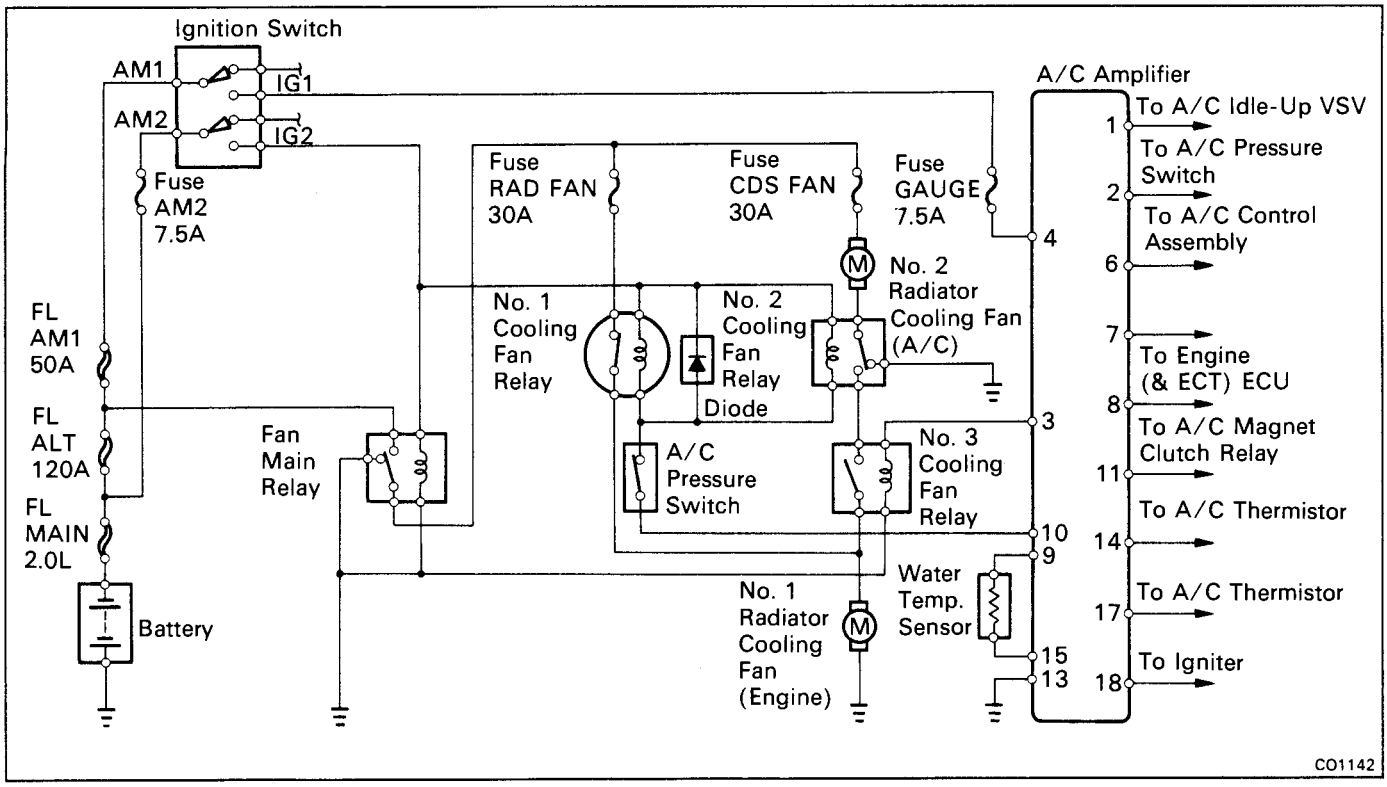

LOCATION OF RADIATOR COOLING FAN COMPONENTS

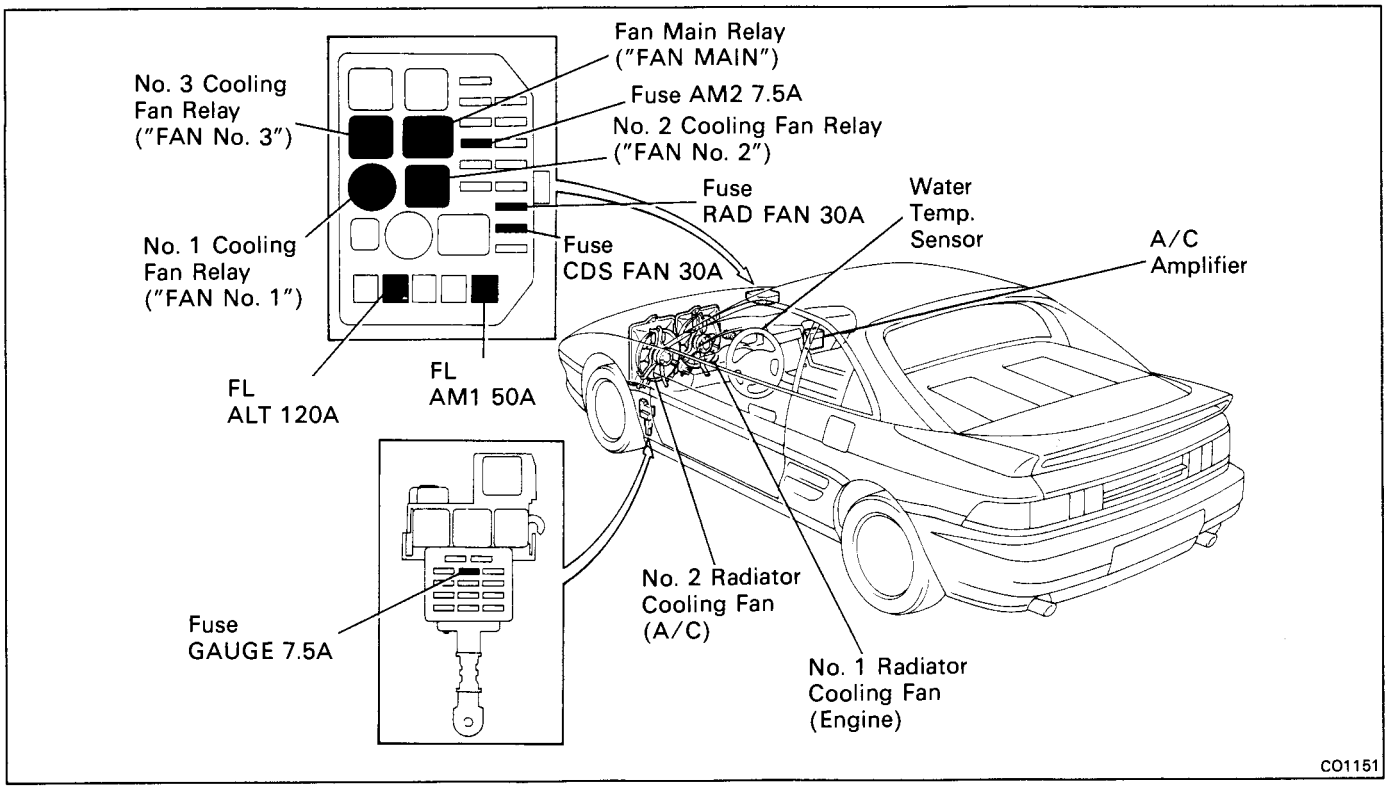

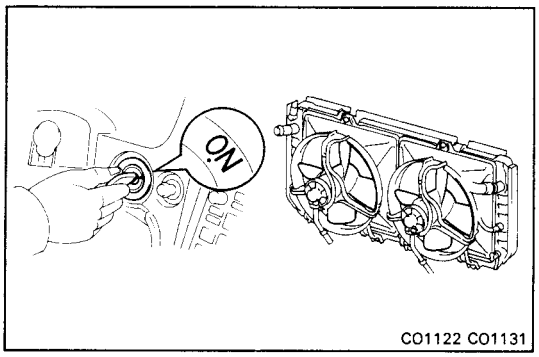

ON-VEHICLE INSPECTION

Low Temperature (Below 85°C (185°F))

1. **TURN IGNITION SWITCH "ON"**

   Check that the cooling fans stops.

   If not, check the cooling fan relays and water temperature sensor, and check for a separated connector or severed wire between the cooling fan relay and water temperature sensor.

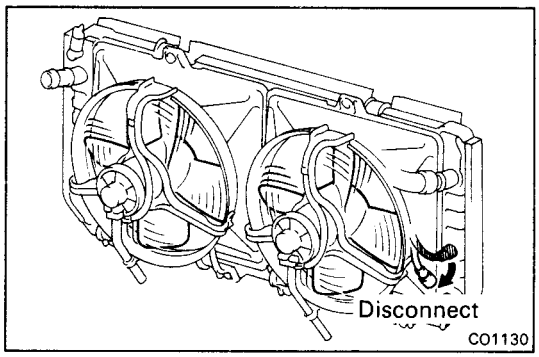

2. **DISCONNECT RADIATOR WATER TEMPERATURE SENSOR CONNECTOR**

   Check that the cooling fans rotates.

   If not, check the fan main relay, cooling fan relays, A/C amplifier, cooling fan and fuses, and check for a short circuit between the cooling fan relay and water temperature sensor.

3. **CONNECT RADIATOR WATER TEMPERATURE SENSOR CONNECTOR**

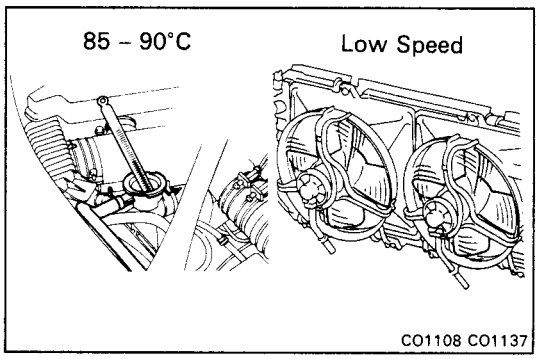

High Temperature (85 – 90°C (185 – 194°F))

4. **START ENGINE**

   (a) Raise coolant temperature to 85 – 90°C (185 – 194°F).

   (b) Check that the cooling fans rotates (at low speed).

   If not, replace the water temperature sensor.

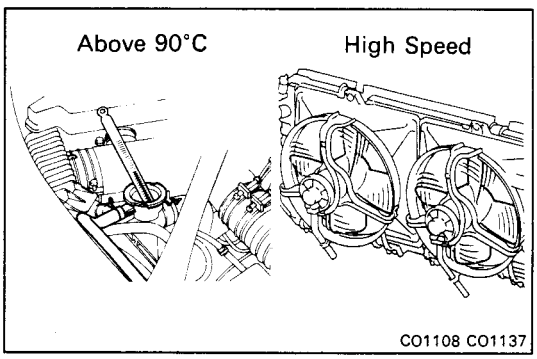

High Temperature (Above 90°C (194°F))

5. **START ENGINE**

   (a) Raise coolant temperature to above 90°C (194°F).

   (b) Check that the cooling fans rotates (at high speed).

   If not, replace the water temperature sensor.

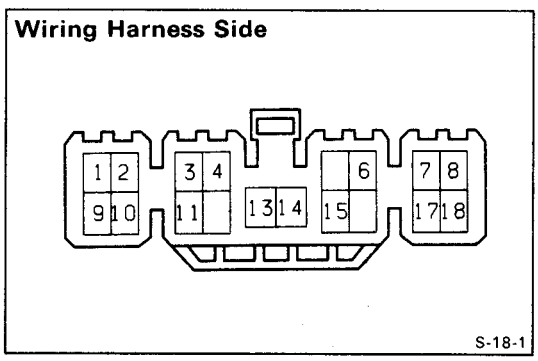

INSPECTION OF RADIATOR COOLING FAN COMPONENTS

1. **INSPECT A/C AMPLIFIER FOR CIRCUIT**

   Disconnect the A/C amplifier connector, and check the connector on the wiring harness side as shown in the chart on the next page.

Check for	Tester connection	Condition		Specified valve
Continuity	3 – Ground	–		Continuity
Voltage	4 – Ground	Ignition switch ON		Battery voltage
Resistance	9 – 15	Coolant temp.	85°C (185°F)	Approx. 1.35 kΩ
			90°C (194°F)	Approx. 1.19 kΩ
			95°C (203°F)	Approx. 1.05 kΩ
Voltage	10 – Ground	Ignition switch ON		Battery voltage
Continuity	13 – Ground	–		Continuity

2. INSPECT FAN MAIN RELAY ("FAN MAIN") (See page CH-18)

Check the relay in the same way as the Ignition Main Relay.

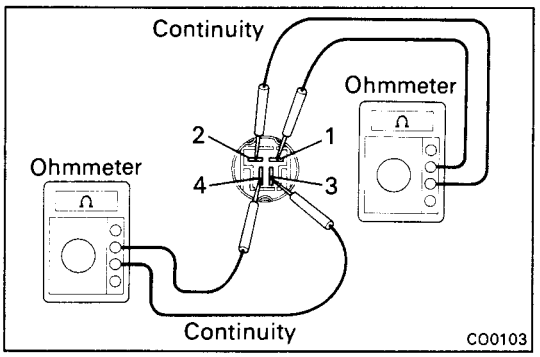

3. INSPECT NO.1 COOLING FAN RELAY ("FAN NO.1")

A. Inspect relay continuity

(a) Using an ohmmeter, check that there is continuity between terminals 1 and 2.

(b) Check that there is continuity between terminals 3 and 4.

If continuity is not as specified, replace the relay.

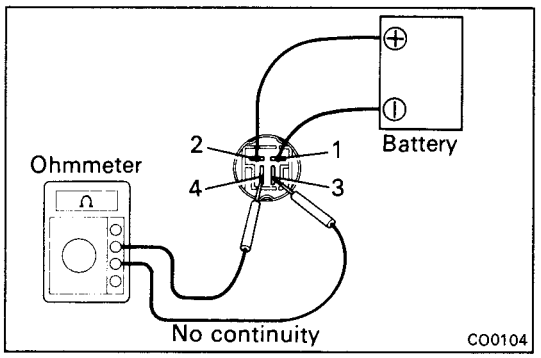

B. Inspect relay operation

(a) Apply battery voltage across terminal 1 and 2.

(b) Using an ohmmeter, check that there is no continuity between terminals 3 and 4.

If operation is not as specified, replace the relay.

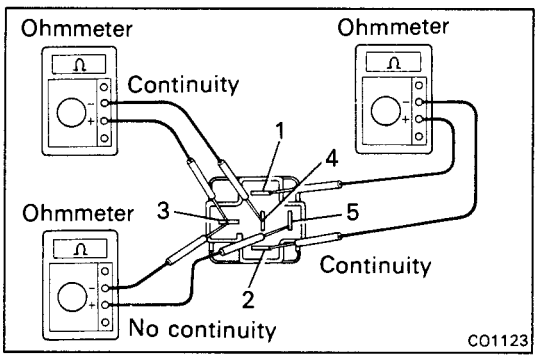

4. INSPECT NO.2 COOLING FAN RELAY ("FAN NO.2")

A. Inspect relay continuity

(a) Using an ohmmeter, check that there is continuity between terminals 1 and 2.

(b) Check that there is continuity between terminals 3 and 4.

(c) Check that there is no continuity between terminals 3 and 5.

If continuity is not as specified, replace the relay.

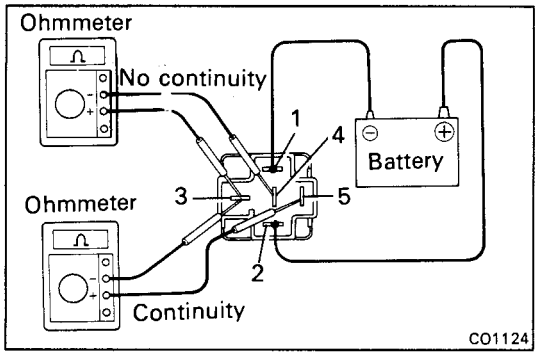

B. Inspect relay operation

(a) Apply battery voltage across terminal 1 and 2.

(b) Using an ohmmeter, check that there is no continuity between terminals 3 and 4.

(c) Check that there is continuity between terminals 3 and 5.

If operation is not as specified, replace the relay.

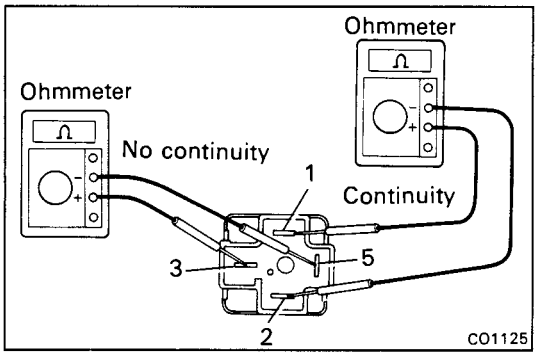

5. INSPECT NO.3 COOLING FAN RELAY ("FAN NO.3")

A. Inspect relay continuity

(a) Using an ohmmeter, check that there is continuity between terminals 1 and 2.

(b) Check that there is no continuity between terminals 3 and 5.

If continuity is not as specified, replace the relay.

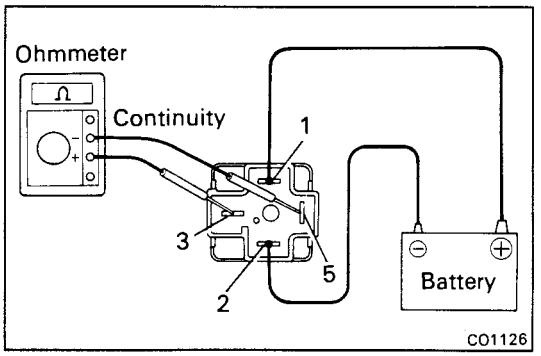

B. Inspect relay operation

(a) Apply battery voltage across terminal 1 and 2.

(b) Using an ohmmeter, check that there is continuity between terminals 3 and 5.

If operation is not as specified, replace the relay.

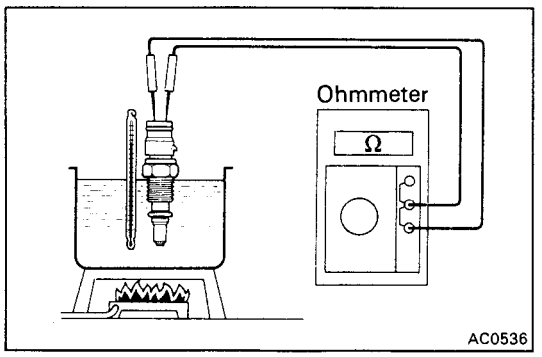

6. INSPECT RADIATOR WATER TEMPERATURE SENSOR

Using an ohmmeter, measure the resistance between the terminals.

Resistance:

Approx. 1.35 kΩ at 85°C (185°F)
Approx. 1.19 kΩ at 90°C (194°F)
Approx. 1.05 kΩ at 95°C (203°F)

If resistance is not as specified, replace the sensor.

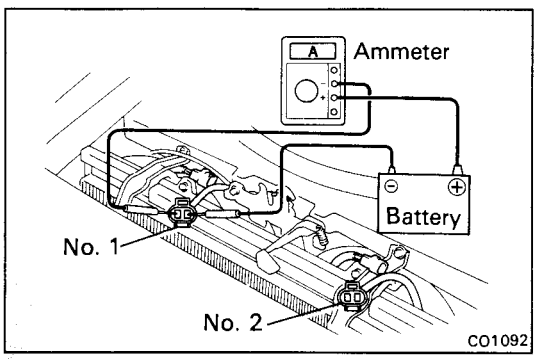

7. INSPECT NO. 1 AND NO. 2 RADIATOR COOLING FANS

(a) Connect battery and ammeter to the cooling fan connector.

(b) Check that the cooling fan rotates smoothly, and check the reading on the ammeter.

Standard amperage: M/T 5.8 – 7.4 A
A/T 8.8 – 10.8 A

REMOVAL OF RADIATOR COOLING FANS

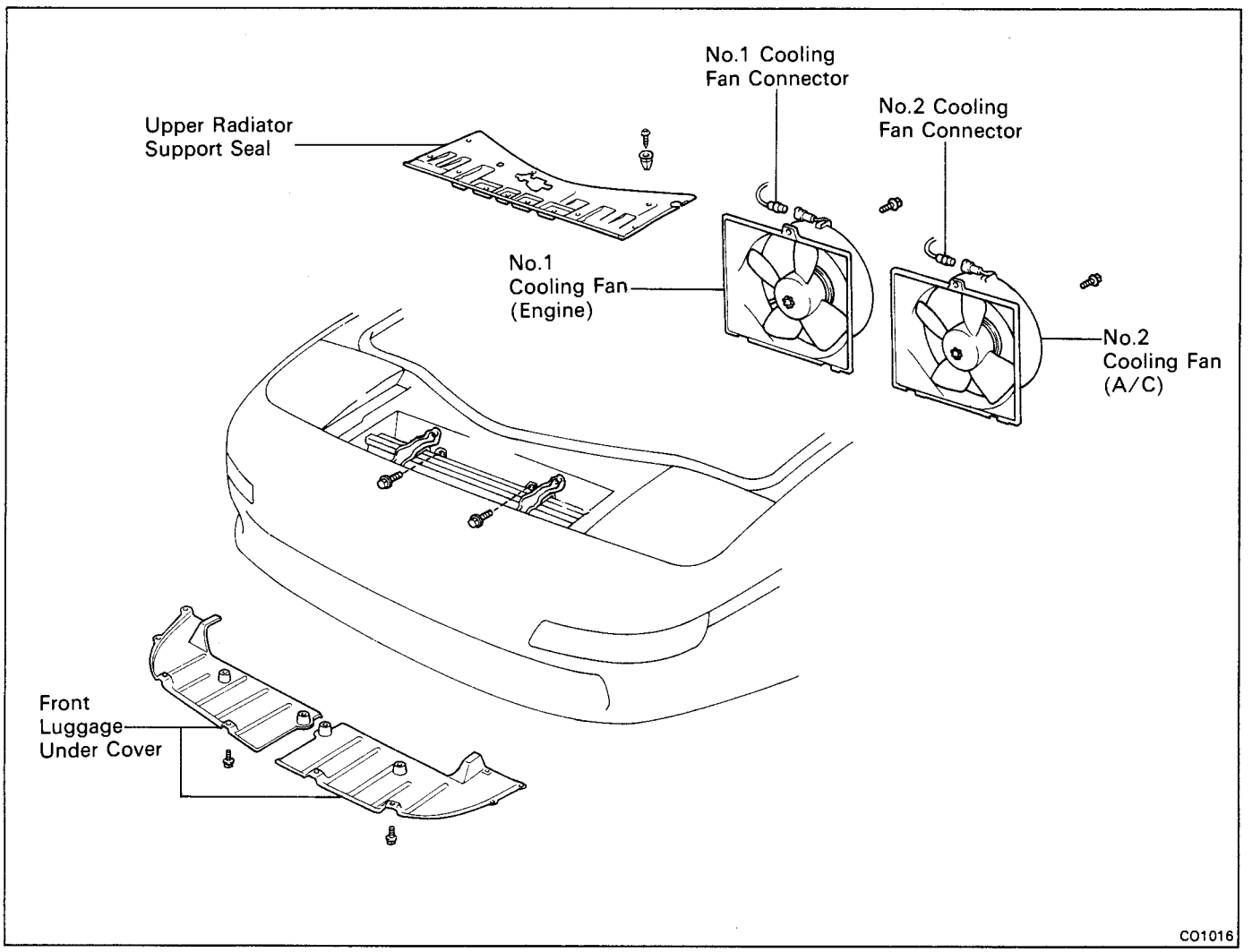

1. **DISCONNECT CABLE FROM NEGATIVE TERMINAL OF BATTERY**

   CAUTION: Work must be started after approx. 20 seconds or longer from the time the ignition switch is turned to the "LOCK" position and the negative (–) terminal cable is disconnected from the battery.

2. **DISCONNECT FRONT LUGGAGE UNDER COVERS**

3. **DISCONNECT UPPER RADIATOR SUPPORT SEAL (See step 4 on page CO-17)**

4. **DISCONNECT RADIATOR COOLING FAN CONNECTORS**

5. **REMOVE RADIATOR COOLING FANS**

   Remove the three bolts and cooling fan. Remove the two cooling fans.

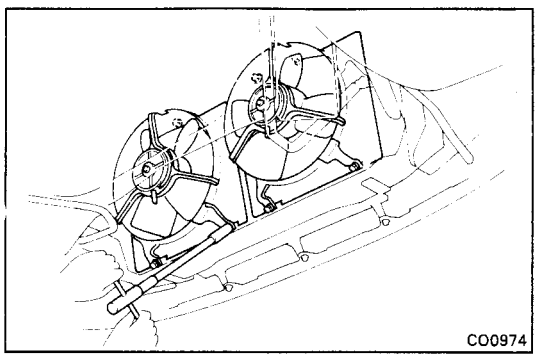

COMPONENTS

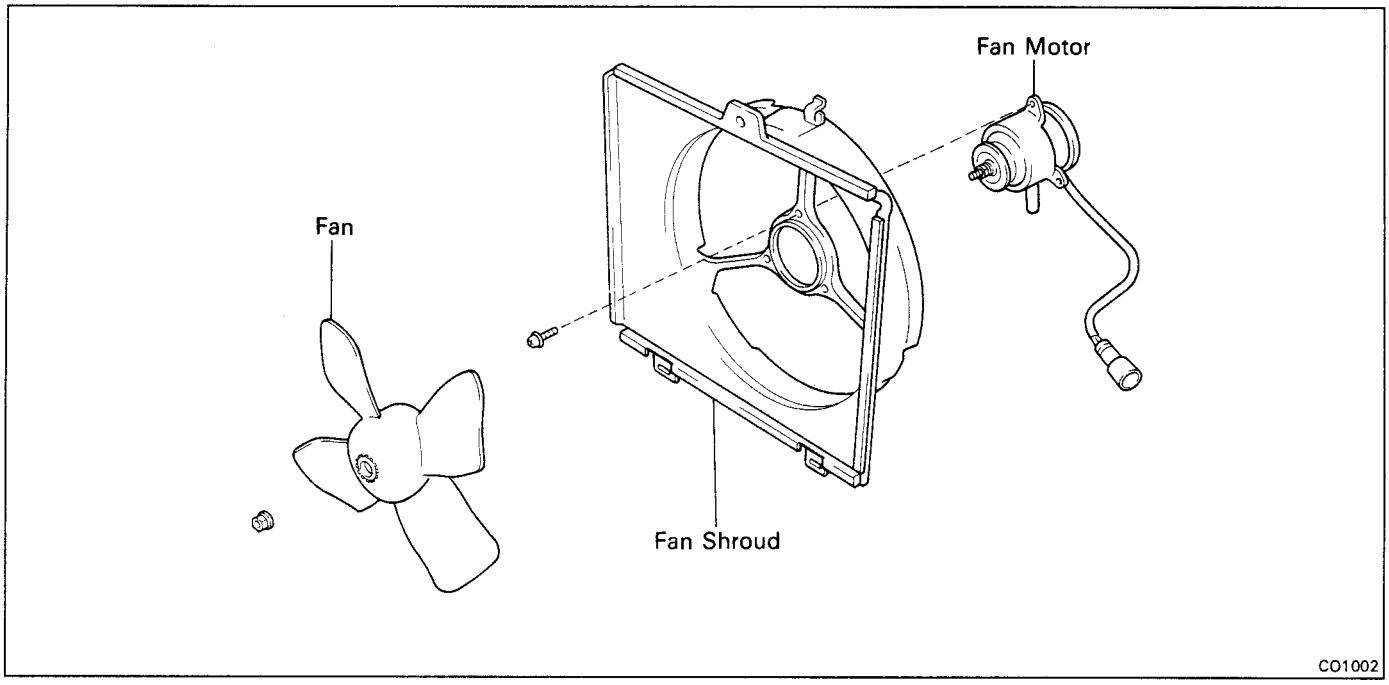

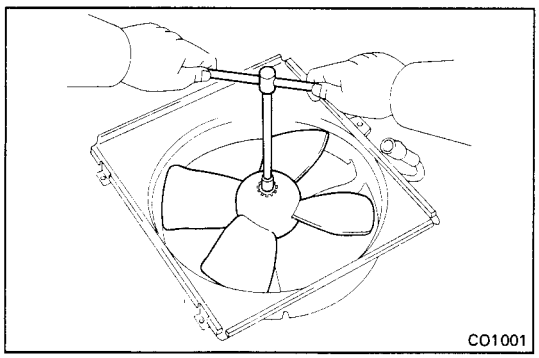

DISASSEMBLY OF RADIATOR COOLING FANS

1. **REMOVE FAN**
   Remove the nut and fan.

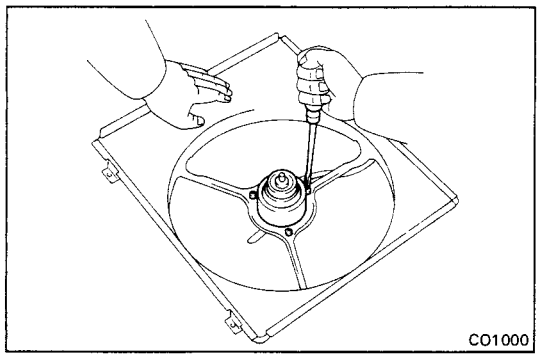

2. **REMOVE FAN MOTOR**
   Remove the three screws and fan motor.

ASSEMBLY OF RADIATOR COOLING FANS

1. **INSTALL FAN MOTOR**
2. **INSTALL FAN**

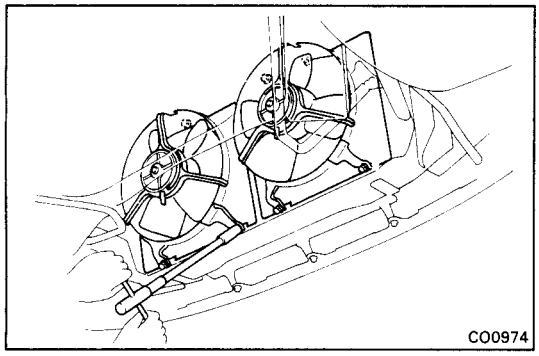

INSTALLATION OF RADIATOR COOLING FANS

(See page CO-25)

1. **INSTALL RADIATOR COOLING FANS**

   Install the cooling fan with the three bolts. Install the two cooling fans.

2. **CONNECT RADIATOR COOLING FAN CONNECTORS**

3. **CONNECT UPPER RADIATOR SUPPORT SEAL**
   (See step 10 on page CO-20)

4. **CONNECT FRONT LUGGAGE UNDER COVERS**

5. **CONNECT CABLE TO NEGATIVE TERMINAL OF BATTERY**

Radiator Cooling Fan (w/o A/C)

SYSTEM CIRCUIT

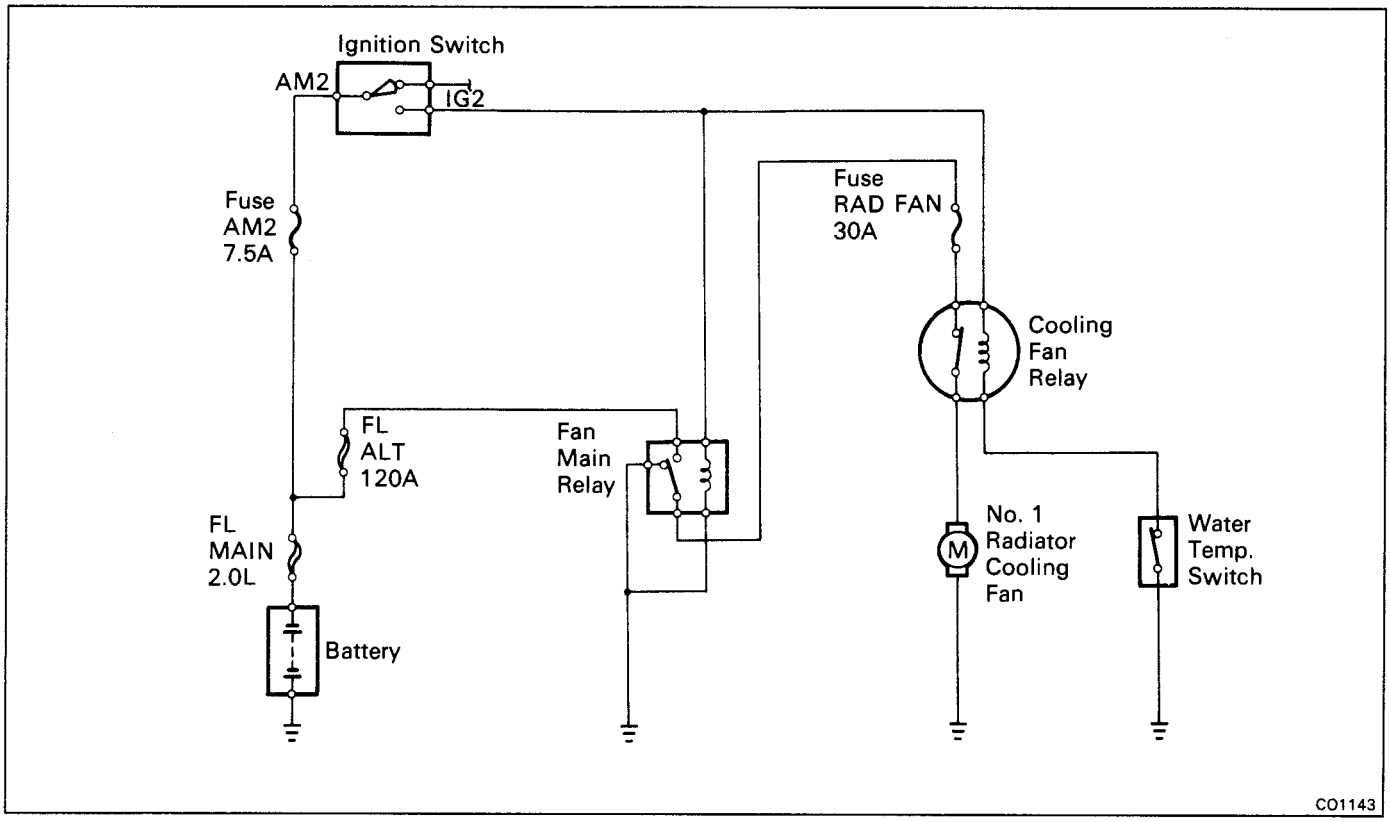

LOCATION OF RADIATOR COOLING FAN COMPONENTS

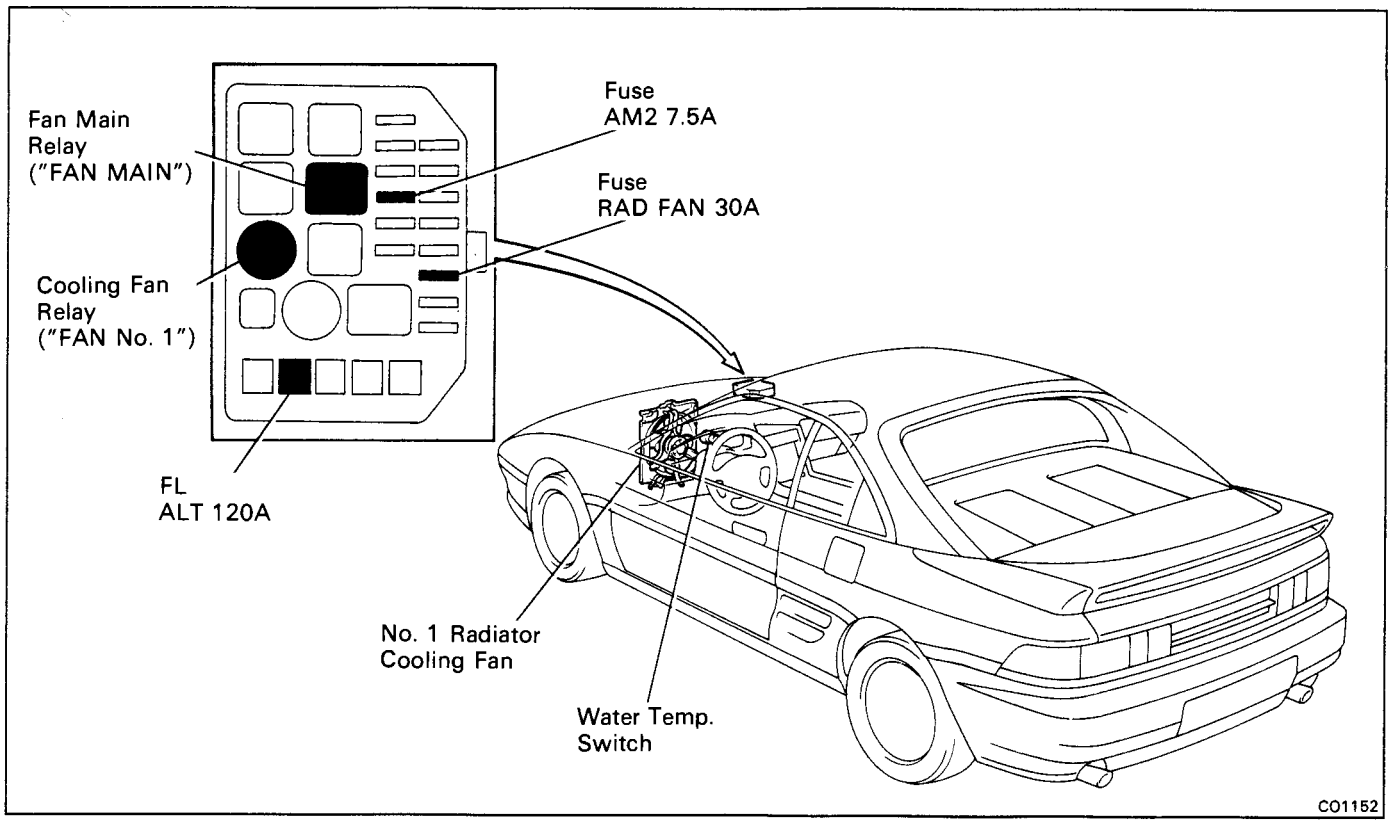

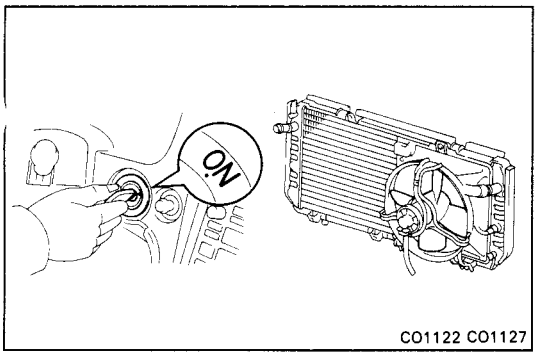

ON-VEHICLE INSPECTION

Low Temperature (Below 83°C (181°F))

1. **TURN IGNITION SWITCH "ON"**

   Check that the cooling fan stops.

   If not, check the cooling fan relays and water temperature switch, and check for a separated connector or severed wire between the cooling fan relay and water temperature switch.

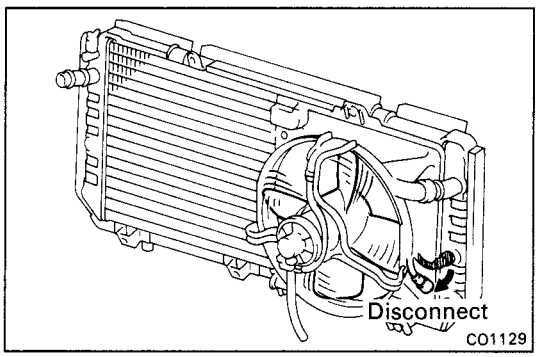

2. **DISCONNECT WATER TEMPERATURE SWITCH CONNECTOR**

   Check that the cooling fan rotates.

   If not, check the fan main relay, cooling fan relays, cooling fan and fuses, and check for a short circuit between the cooling fan relay and water temperature switch.

3. **CONNECT WATER TEMPERATURE SWITCH CONNECTOR**

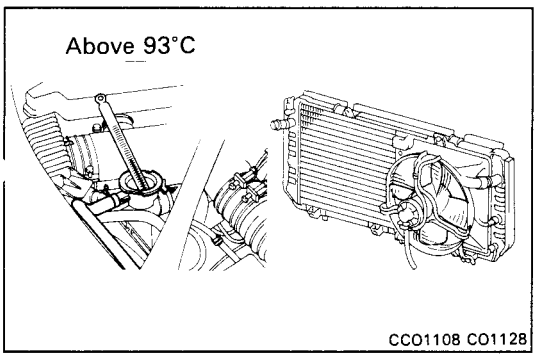

High Temperature (Above 93°C (199°F))

4. **START ENGINE**

   (a) Raise coolant temperature to above 93°C (199°F).

   (b) Check that the cooling fan rotates.

   If not, replace the water temperature switch.

INSPECTION OF RADIATOR COOLING FAN COMPONENTS

1. **INSPECT FAN MAIN RELAY ("FAN MAIN") (See page CH-18)**

   Check the relay in the same way as the Ignition Main Relay.

2. **INSPECT NO.1 COOLING FAN RELAY ("FAN NO.1") (See page CO-23)**

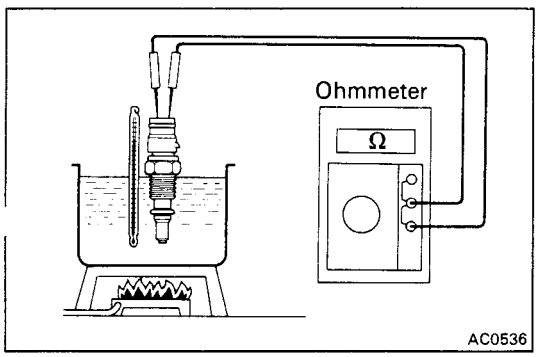

3. **INSPECT RADIATOR WATER TEMPERATURE SWITCH**

   (a) Using an ohmmeter, check that there is no continuity between the terminals when the coolant temperature is above 93°C (199°F).

   (b) Using an ohmmeter, check that there is continuity between the terminals when the coolant temperature is below 83°C (181°F).

   If continuity is not as specified, replace the switch.

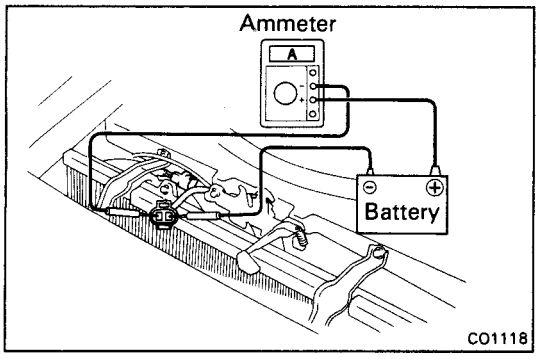

4. **INSPECT NO. 1 RADIATOR COOLING FAN**
   (a) Connect battery and ammeter to the cooling fan connector.
   (b) Check that the cooling fan rotates smoothly, and check the reading on the ammeter.

   Standard amperage: **M/T 5.8 – 7.4 A**
   A/T 8.8 – 10.8 A

REMOVAL OF RADIATOR COOLING FAN

REMOVE NO.1 RADIATOR COOLING FAN
(See page CO-25)

DISASSEMBLY AND ASSEMBLY OF RADIATOR COOLING FAN

(See page CO-26)

INSTALLATION OF RADIATOR COOLING FAN

INSTALL NO. 1 RADIATOR COOLING FAN
(See page CO-27)

Engine Compartment Cooling Fan (3S-GTE)

SYSTEM CIRCUIT

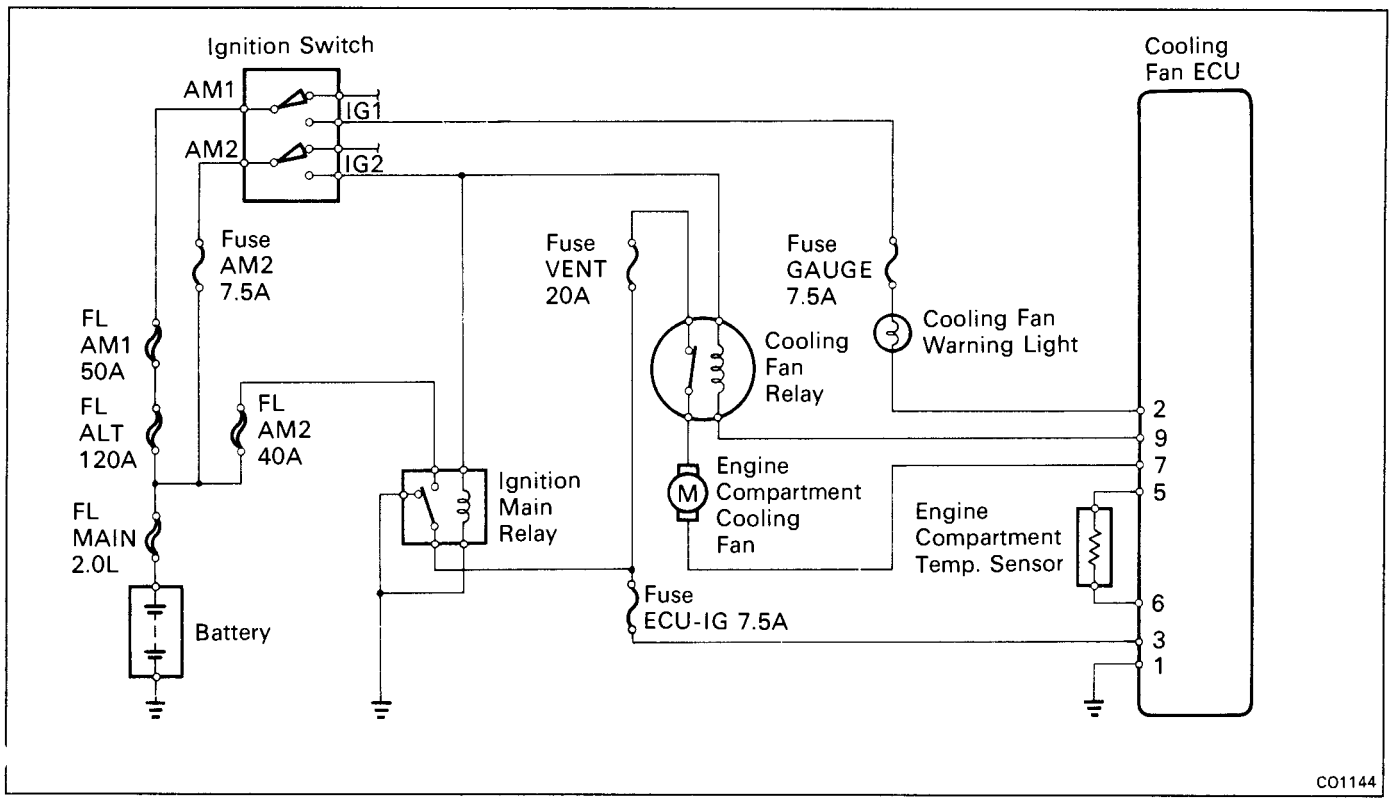

LOCATION OF ENGINE COMPARTMENT COOLING FAN COMPONENTS

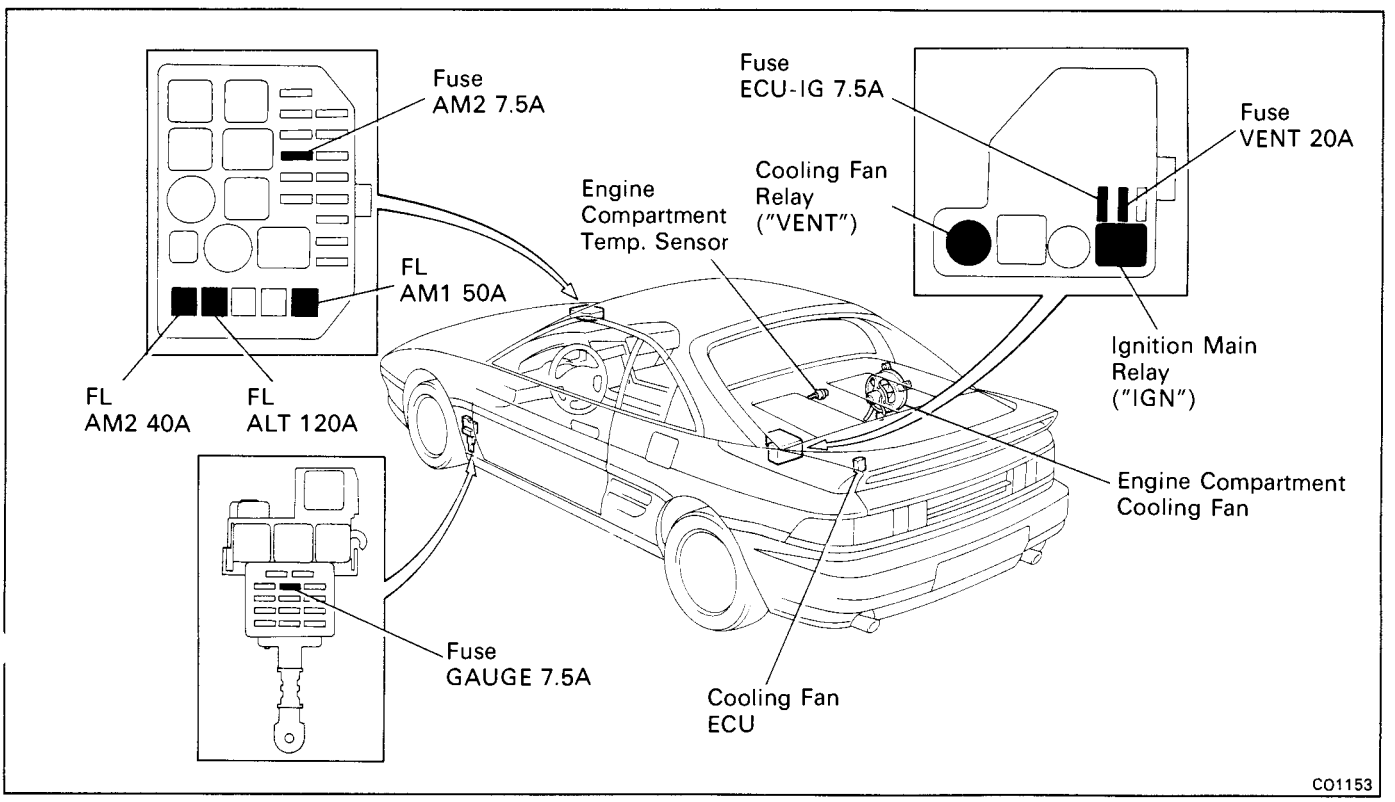

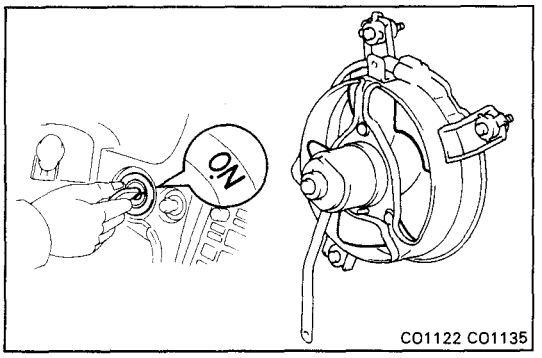

ON-VEHICLE INSPECTION

Low Temperature (Below 45.5°C (113.9°F))

1. **TURN IGNITION SWITCH "ON"**

   Check that the cooling fan stops.

   If not, check the cooling fan relays and engine compartment temperature sensor, and check for a separated connector or severed wire between the cooling fan relay and engine compartment temperature sensor.

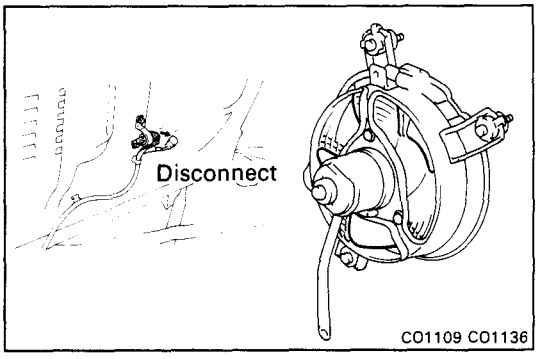

2. **DISCONNECT ENGINE COMPARTMENT TEMPERATURE SENSOR CONNECTOR**

   Check that the cooling fan rotates.

   If not, check the ignition main relay, cooling fan relays, cooling fan ECU, cooling fan and fuses, and check for a short circuit between the cooling fan relay and engine compartment temperature sensor.

3. **CONNECT ENGINE COMPARTMENT TEMPERATURE SENSOR CONNECTOR**

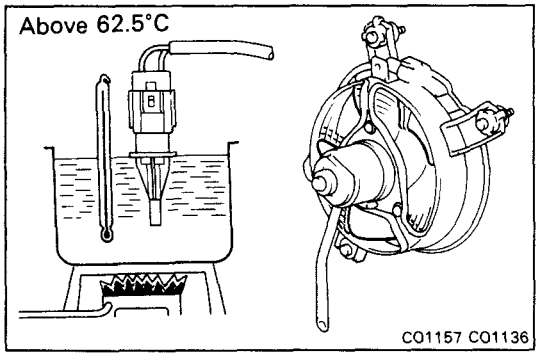

High Temperature (Above 62.5°C (144.5°F))

4. **START ENGINE**

   (a) Raise coolant temperature to above 62.5°C (144.5°F).

   (b) Check that the cooling fan rotates.

   If not, replace the engine compartment temperature sensor.

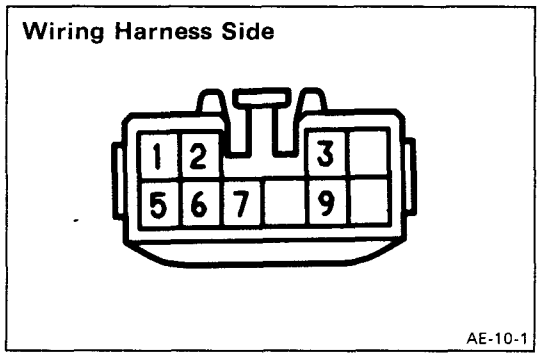

INSPECTION OF ENGINE COMPARTMENT COOLING FAN COMPONENTS

1. INSPECT COOLING FAN ECU FOR CIRCUIT

Disconnect the cooling fan ECU connector, and check the connector on the wiring harness side as shown in the chart.

Check for	Tester connection	Condition		Specified valve
Continuity	1 – Ground	–		Continuity
Voltage	2 – Ground	Ignition switch ON		Battery voltage
Voltage	3 – Ground	Ignition switch ON		Battery voltage
Resistance	5 – 6	Coolant temp.	20°C (68°F)	Approx. 2.45 kΩ
			57.5°C (135.5°F)	Approx. 0.63 kΩ
			80°C (176°F)	Approx. 0.32 kΩ
Voltage	7 – Ground	Ignition switch ON		Battery voltage
Continuity	9 – Ground	Ignition switch ON		Battery voltage

2. INSPECT IGNITION MAIN RELAY ("IGN")
(See page CH-18)

3. INSPECT COOLING FAN MAIN RELAY ("VENT")
(See page CO-23)

Check the relay the same way as for the No.1 Cooling Fan Relay.

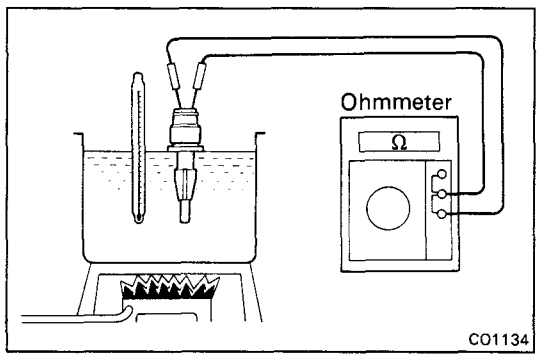

4. INSPECT ENGINE COMPARTMENT TEMPERATURE SENSOR

Using an ohmmeter, measure the resistance between the terminals.

Resistance:
Approx. 2.45 kΩ at 20°C (68°F)
Approx. 0.63 kΩ at 57.5°C (135.5°F)
Approx. 0.32 kΩ at 80°C (176°F)

If resistance is not as specified, replace the sensor.

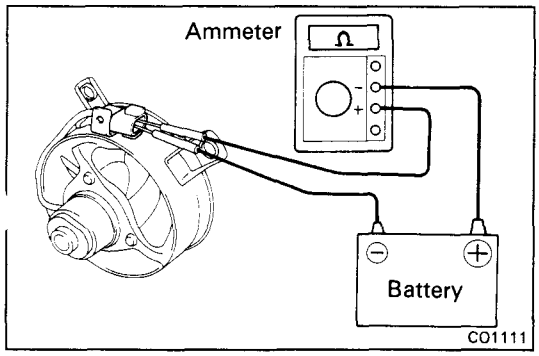

5. INSPECT ENGINE COMPARTMENT COOLING FAN

(a) Connect battery and ammeter to the cooling fan connector.

(b) Check that the cooling fan rotates smoothly, and check the reading on the ammeter.

Standard amperage: 3.1 – 4.3 A

REMOVAL OF ENGINE COMPARMENT COOLING FAN

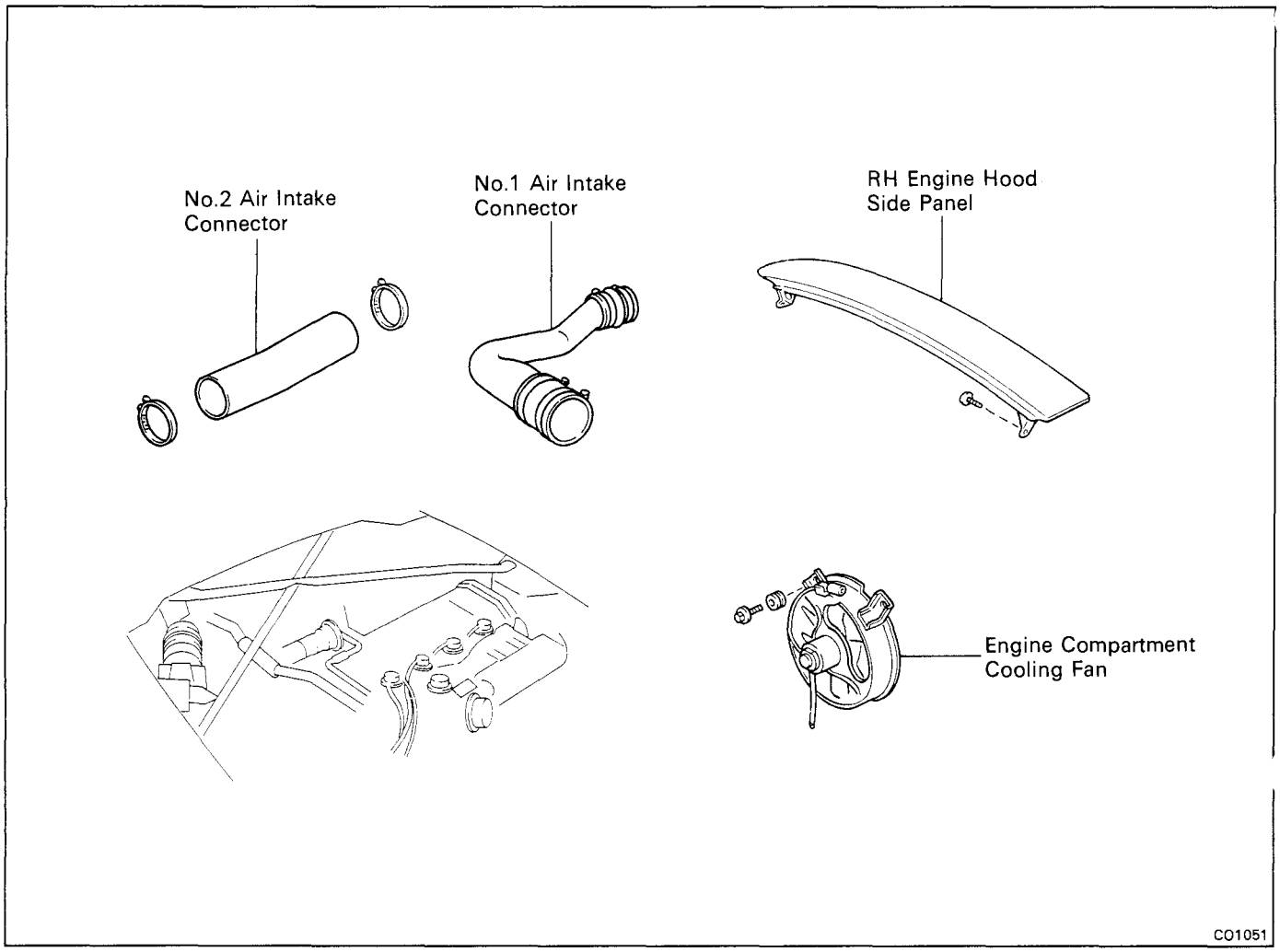

1. **DISCONNECT CABLE FROM NEGATIVE TERMINAL OF BATTERY**

   CAUTION: Work must be started after approx. 20 seconds or longer from the time the ignition switch is turned to the "LOCK" position and the negative (–) terminal cable is disconnected from the battery.

2. **REMOVE RH ENGINE HOOD SIDE PANEL**

3. **REMOVE NO.1 AND NO.2 AIR INTAKE CONNECTORS (See steps 4 and 5 on page TC-20)**

4. **DISCONNECT ENGINE COMPARTMENT COOLING FAN CONNECTOR**

5. **REMOVE ENGINE COMPARTMENT COOLING FAN**

   Loosen the three bolts, and remove the cooling fan.

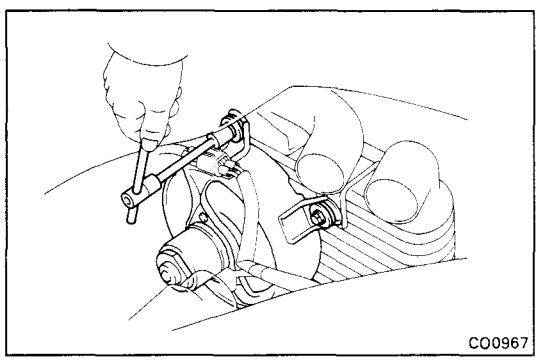

COMPONENTS

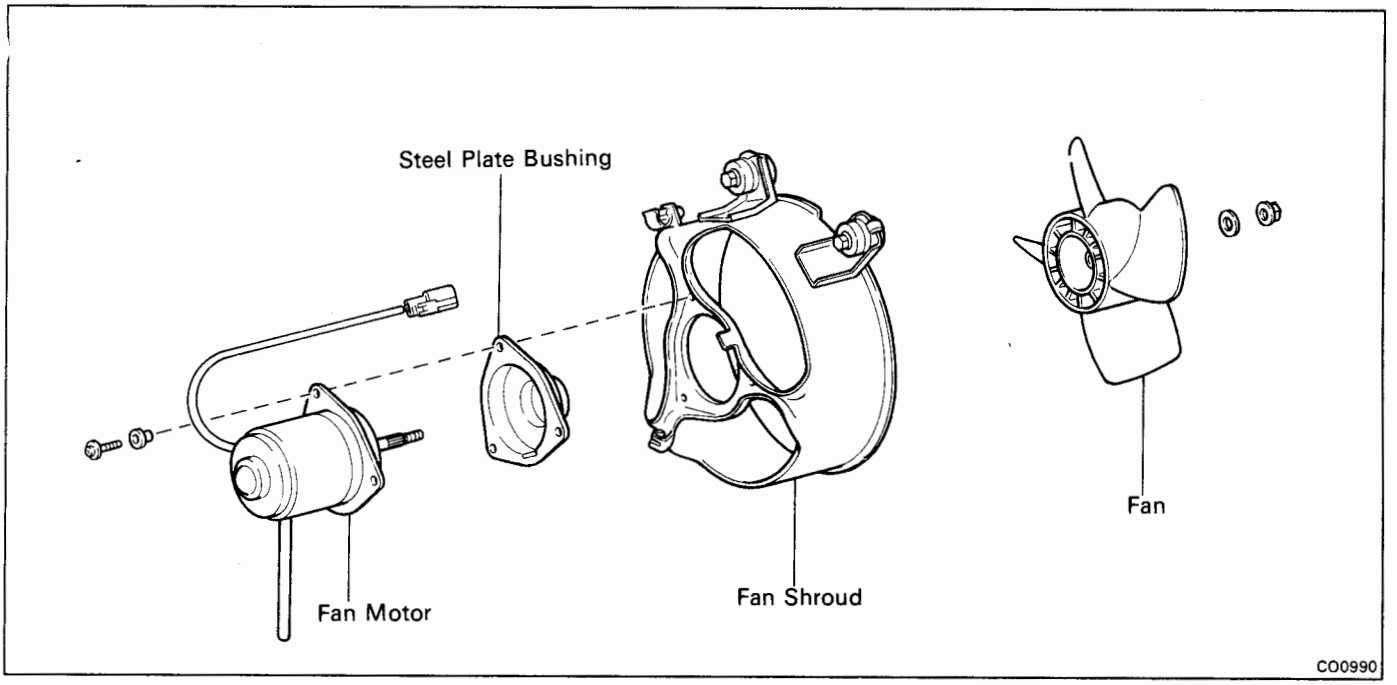

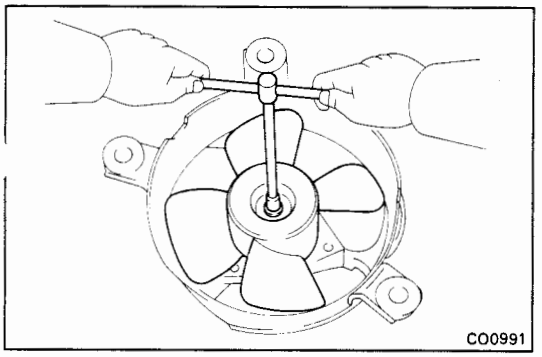

DISASSEMBLY OF ENGINE COMPARTMENT COOLING FAN

1. **REMOVE FAN**
   Remove the nut and fan.

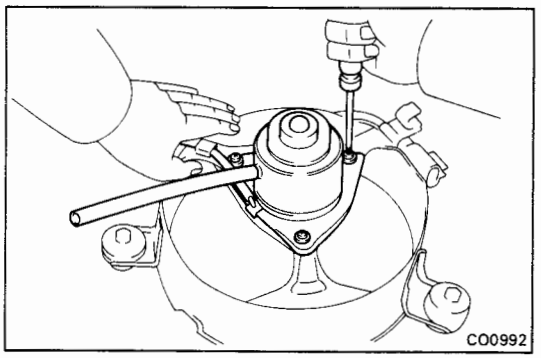

2. **REMOVE FAN MOTOR**
   Remove the three screws and fan motor.

ASSEMBLY OF ENGINE COMPARTMENT COOLING FAN

1. **INSTALL FAN MOTOR**
2. **INSTALL FAN**

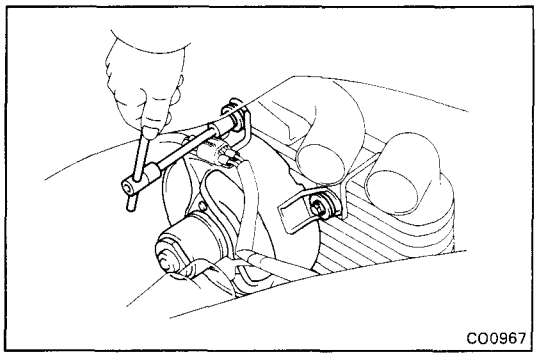

INSTALLATION OF ENGINE COMPARTMENT COOLING FAN

(See page CO-34)

1. **INSTALL ENGINE COMPARTMENT COOLING FAN**
   Install the cooling fan with the three bolts.

2. **CONNECT ENGINE COMPARTMENT COOLING FAN CONNECTOR**

3. **INSTALL NO.1 AND NO.2 AIR INTAKE CONNECTORS**
   (See steps 10 and 11 on page TC-25)

4. **INSTALL RH ENGINE HOOD SIDE PANEL**

5. **CONNECT CABLE TO NEGATIVE TERMINAL OF BATTERY**

LUBRICATION SYSTEM

	Page
DESCRIPTION	LU-2
TROUBLESHOOTING	LU-4
OIL PRESSURE CHECK	LU-5
REPLACEMENT OF ENGINE OIL AND OIL FILTER	LU-6
OIL PUMP	LU-9
OIL COOLER (3S-GTE)	LU-18
OIL COOLER (5S-FE)	LU-23
OIL NOZZLES (3S-GTE)	LU-26

DESCRIPTION

A fully pressurized, fully filtered lubrication system has been adopted for this engine.

3S-GTE

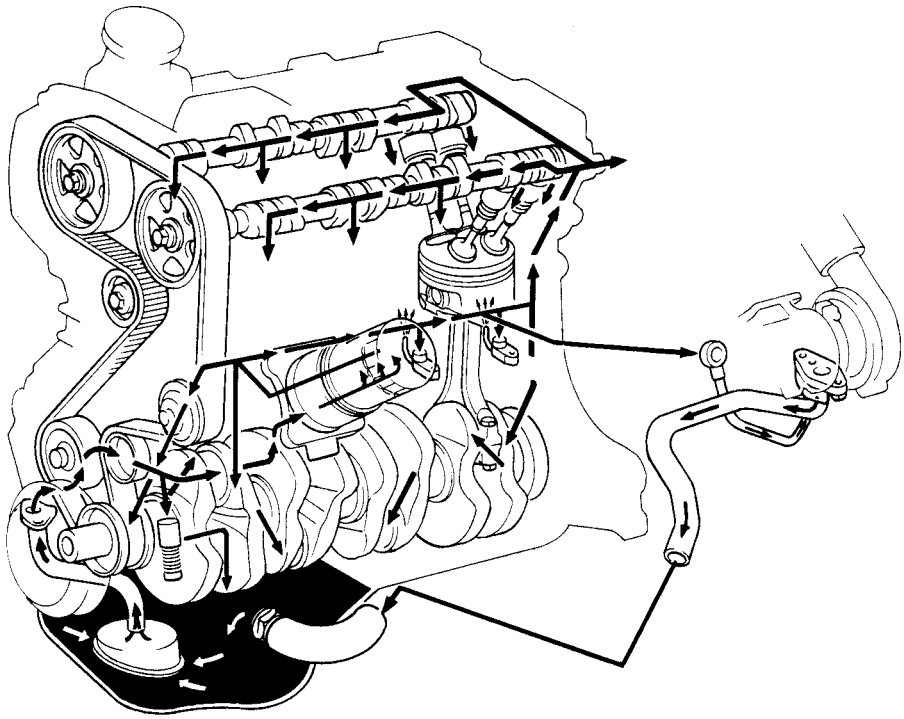

LU0932

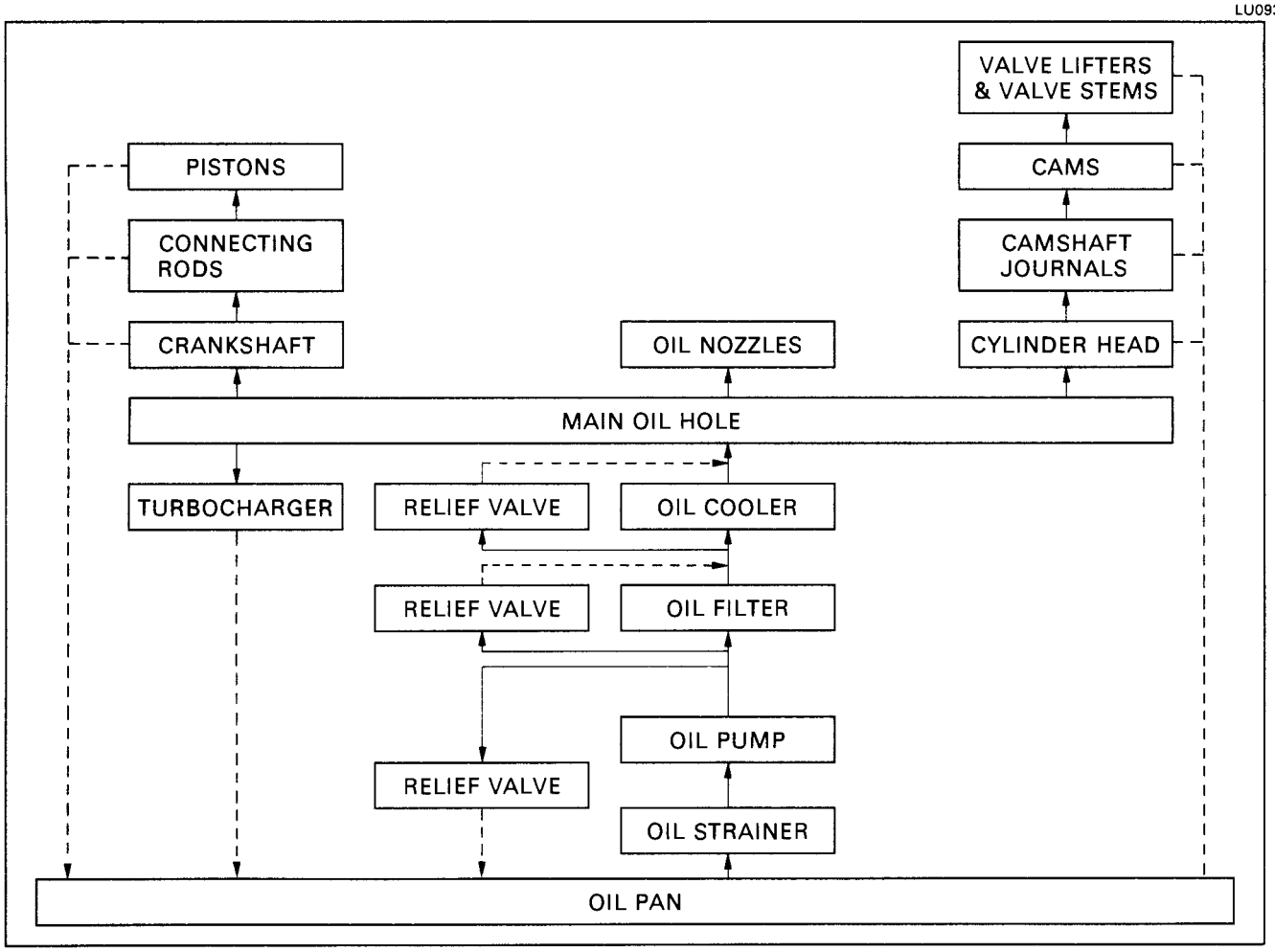

5S-FE

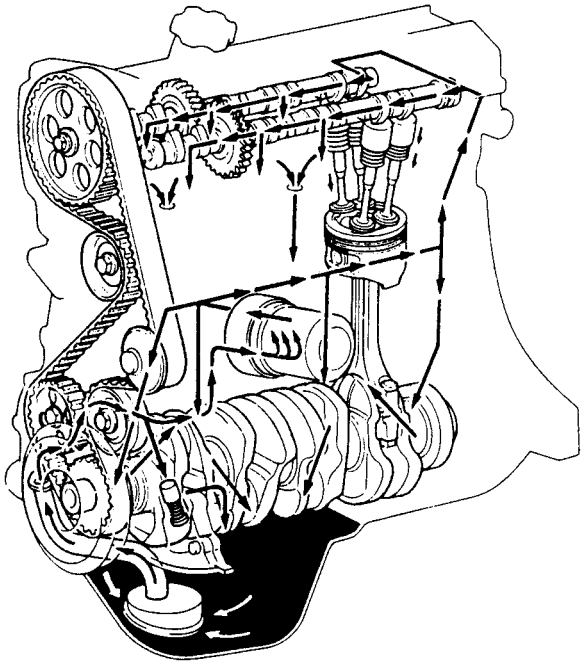

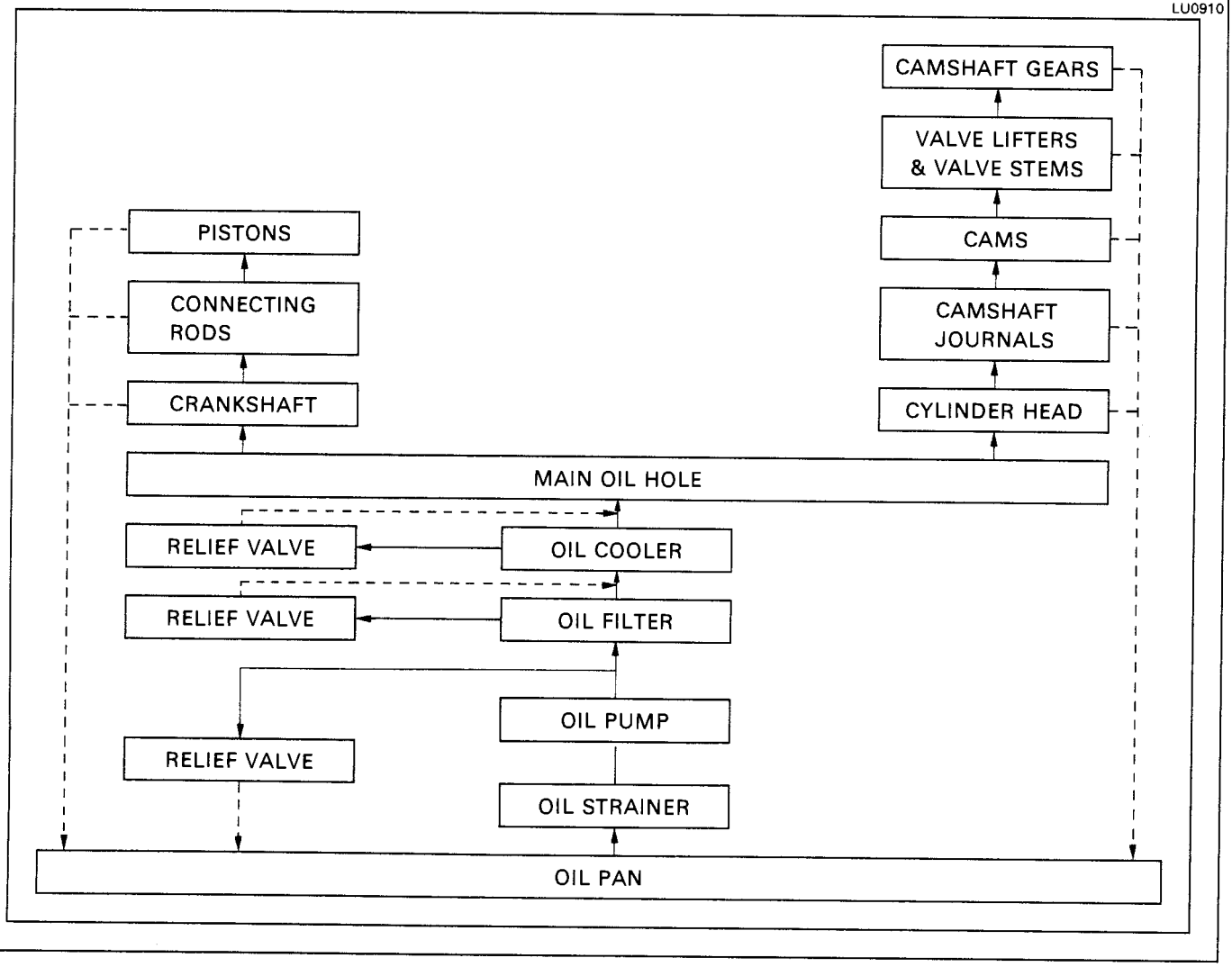
LU0910
CAMSHAFT GEARS
VALVE LIFTERS & VALVE STEMS
CAMS
CAMSHAFT JOURNALS
CYLINDER HEAD
PISTONS
CONNECTING RODS
CRANKSHAFT
MAIN OIL HOLE
RELIEF VALVE
OIL COOLER
RELIEF VALVE
OIL FILTER
OIL PUMP
RELIEF VALVE
OIL STRAINER
OIL PAN

A pressure feeding lubrication system has been adopted to supply oil to the moving parts of this engine. The lubrication system consists of an oil pan, oil pump, oil filter and other external parts which supply oil to the moving parts in the engine block. The oil circuit is shown in the illustration at the top of the previous page. Oil from the oil pan is pumped up by the oil pump. After it passes through the oil filter, it is fed through the various oil holes in the crankshaft and cylinder block. After passing through the cylinder block and performing its lubricating function, the oil is returned by gravity to the oil pan. A dipstick on the center left side of the cylinder block is provided to check the oil level.

OIL PUMP

The oil pump pumps up oil from the oil pan and sends it under pressure to the various parts of the engine. An oil strainer is mounted in front of the inlet to the oil pump. The oil pump itself is a trochoid type pump, inside of which there is a drive rotor and a driven rotor. When the drive rotor rotates, the driven rotor rotates in the same direction, and since the axis of the driven rotor shaft is different from the center of the driven rotor, the space between the two rotors is changed as they rotate. Oil is drawn in when the space is wide and is discharged when the space is narrow.

OIL PRESSURE REGULATOR

At high engine speeds, the engine oil supplied by the oil pump exceeds the capacity of the engine to utilize it. For that reason, the oil pressure regulator works to prevent an oversupply of oil. During normal oil supply, a coil spring and valve keep the bypass closed, but when too much oil is being fed, the pressure become extremely high, overpowering the force of the spring and opening the valves. This allows the excess oil to flow through the valve and return to the oil pan.

OIL FILTER

The oil filter is a full flow type filter with a built-in paper filter element. Particles of metal from wear, airborn dirt, carbon and other impurities can get into the oil during use and could cause accelerated wear or sizing if allowed to circulate through the engine. The oil filter, integrated into the oil line, removes these impurities as the oil passes through it. The filter is mounted outside the engine to simplify replacement of the filter element. A relief valve is also included ahead of the filter element to relieve the high oil pressure in case the filter element becomes clogged with impurities. The relief valve opens when the oil pressure overpowers the force of the spring. Oil passing through the relief valve by-passes the oil filter and flows directly into the main oil hole in the engine.

TROUBLESHOOTING

Problem	Possible cause	Remedy	Page
Oil leakage	Cylinder head, cylinder block or oil pump body damaged or cracked	Repair as necessary	
	Oil seal faulty	Replace oil seal	EM-160, 161 LU-10
	Gasket faulty	Replace gasket	
Low oil pressure	Oil leakage	Repair as necessary	
	Relief valve faulty	Repair relief valve	LU-10
	Oil pump faulty	Repair oil pump	LU-10
	Engine oil poor quality	Replace engine oil	LU-7
	Crankshaft bearing faulty	Replace bearing	EM-134, 182
	Connecting rod bearing faulty	Replace bearing	EM-134, 182
	Oil filler clogged	Replace oil filler	LU-7
High oil pressure	Relief valve faulty	Repair relief valve	LU-10

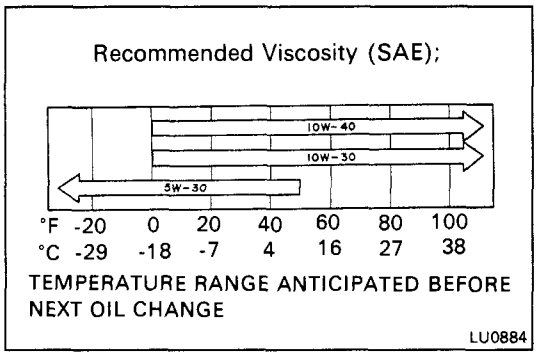

OIL PRESSURE CHECK

1. **CHECK ENGINE OIL QUALITY**

   Check the oil for deterioration, entry of water, discoloring or thinning.

   If the quality is poor, replace the oil.

   Oil grade: API grade SG, multigrade, fuelefficient and recommended viscosity oil

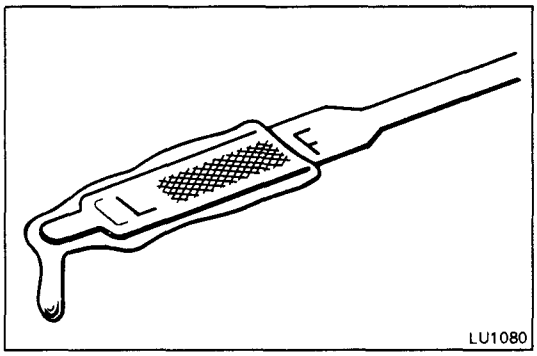

2. **CHECK ENGINE OIL LEVEL**

   The oil level should be between the "L" and "F" marks on the dipstick.

   If low, check for the leakage and add oil up to "F" mark.

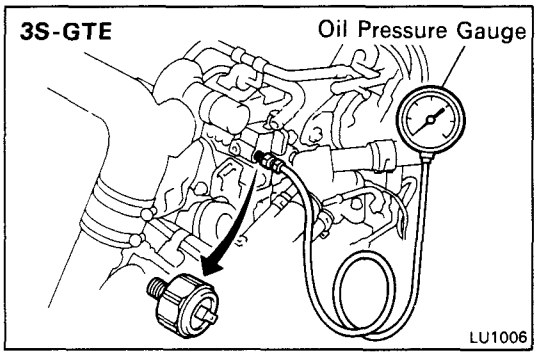

3. **REMOVE OIL PRESSURE SWITCH**

4. **INSTALL OIL PRESSURE GAUGE**

5. **WARM UP ENGINE**

   Allow the engine to warm up to normal operating temperature.

6. **CHECK OIL PRESSURE**

   Oil pressure:

At idling	**0.3 kg/cm² (4.3 psi, 29 kPa) or more**
At 3,000 rpm	**2.5 – 5.0 kg/cm² (36 – 71 psi, 245 – 490 kPa)**

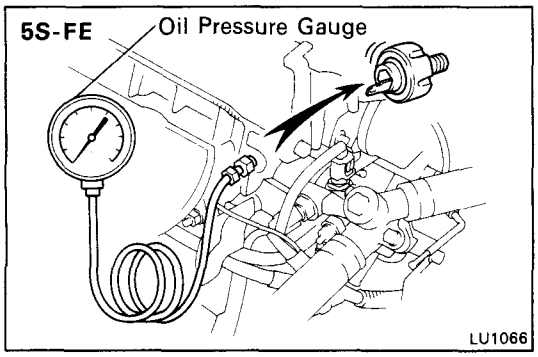

7. **REMOVE OIL PRESSURE GAUGE, AND REINSTALL OIL PRESSURE SWITCH**

   Apply adhesive to two or three threads of the oil pressure switch.

   Adhesive: Part No. 08833-00080, THREE BOND 1344, LOCTITE 242 or equivalent

8. **START ENGINE AND CHECK FOR LEAKS**

REPLACEMENT OF ENGINE OIL AND OIL FILTER

NOTICE:

- **Prolonged and repeated contact with mineral oil will result in the removal of natural fats from the skin, leading to dryness, irritation and dermatitis. In addition, used engine oil contains potentially harmful contaminants which may cause skin cancer.**
- **Care should be taken, therefore, when changing engine oil, to minimize the frequency and length of time your skin is exposed to used engine oil. Protective clothing and gloves, that cannot be penetrated by oil, should be worn. The skin should be thorougthly washed with soap and water, or use waterless hand cleaner, to remove any used engine oil. Do not use gasoline, thinners, or solvents.**
- **In order to preserve the environment, used oil and used oil filter must be disposed of only at designated disposal sites.**

1. DRAIN ENGINE OIL

(a) Remove the oil filler cap.

(b) Remove the oil drain plug, and drain the oil into a container.

2. REPLACE OIL FILTER

(a) Remove the air duct from the alternator.

(b) Using SST, remove the oil filter.

SST 09228-06500

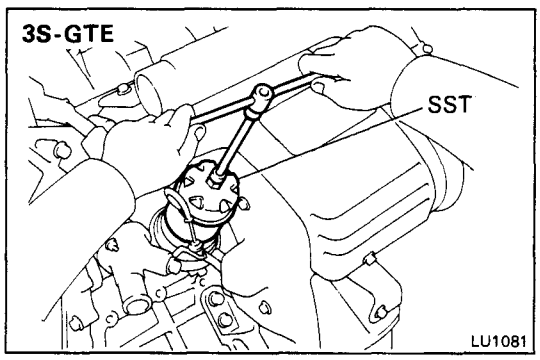

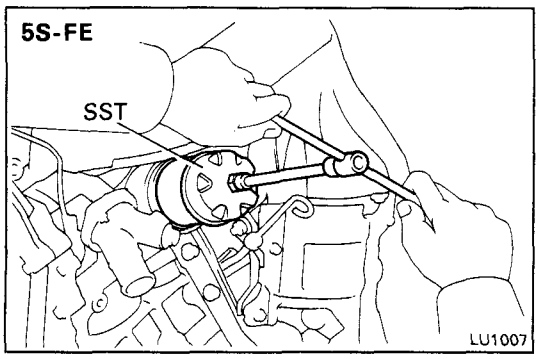

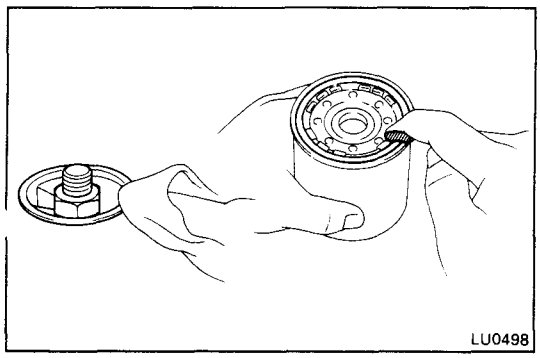

(c) Check and clean the oil filter installation surface.

(d) Apply clean engine oil to the gasket of a new oil filter.

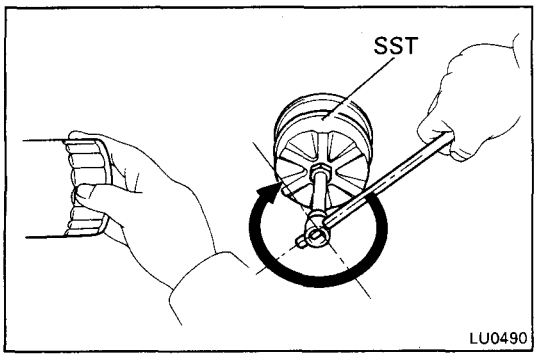

(e) Lightly screw the oil filter into place, and tighten it until the gasket contacts the seat.

(f) Using SST, tighten it an additional 3/4 turn.

SST 09228-06500

(g) Reinstall the air duct to the alternator.

3. FILL WITH ENGINE OIL

(a) Clean and install the oil drain plug with a new gasket.

Torque:
3S-GE 200 kg-cm (14 ft-lb, 20 N·m)
5S-FE 400 kg-cm (29 ft-lb, 39 N·m)

(b) Fill with new engine oil.

Oil grade: See page LU-4

Capacity (3S-GTE):
Drain and refill
w/ Oil filter change
3.9 liters (4.1 US qts, 3.4 Imp. qts)
w/o Oil filter change
3.6 liters (3.8 US qts, 3.2 Imp. qts)
Dry fill 4.3 liters (4.5 US qts, 3.8 Imp. qts)

Capacity (5S-FE):
Drain and refill
w/ Oil filter change
4.0 liters (4.2 US qts, 3.5 Imp. qts)
w/o Oil filter change
3.8 liters (4.0 US qts, 3.3 Imp. qts)
Dry fill 4.4 liters (4.7 US qts, 3.9 Imp. qts)

(c) Reinstall the oil filler cap.

4. START ENGINE AND CHECK FOR LEAKS

5. RECHECK ENGINE OIL LEVEL (See page LU-6)

OIL PUMP

REMOVAL OF OIL PUMP

HINT: When repairing the oil pump, the oil pan and strainer should be removed and cleaned.

3S-GTE

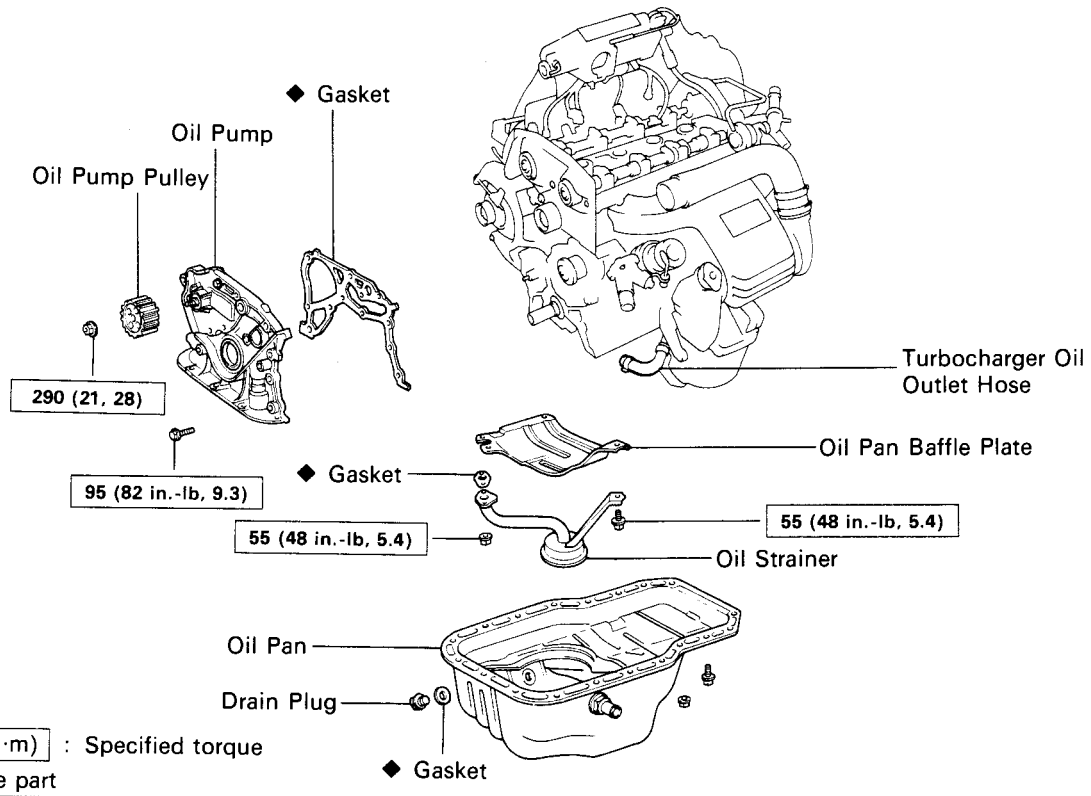

kg-cm (ft-lb, N·m) : Specified torque
◆ Non-reusable part

LU1074

5S-FE

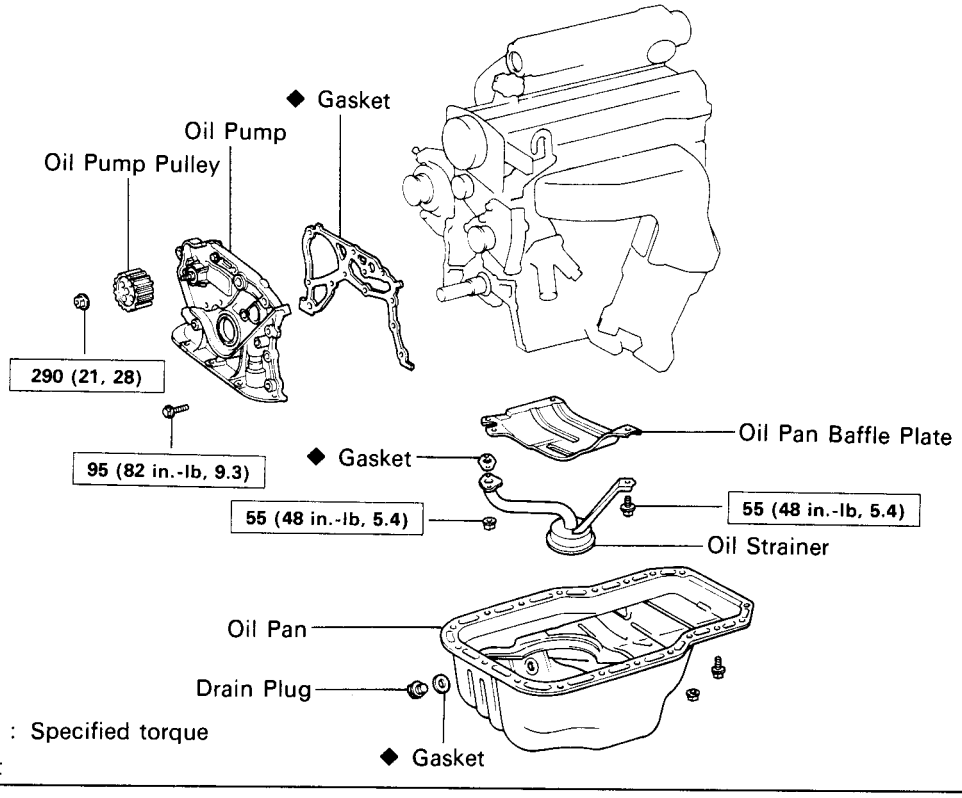

kg-cm (ft-lb, N·m) : Specified torque
◆ Non-reusable part

LU1083

1. **DISCONNECT CABLE FROM NEGATIVE TERMINAL OF BATTERY**

   CAUTION: Work must be started after approx. 20 seconds or longer from the time the ignition switch is turned to the "LOCK" position and the negative (–) terminal cable is dosconnected from the battery.

2. **DRAIN ENGINE OIL (See page LU-6)**

3. **REMOVE ENGINE UNDER COVERS**

4. **REMOVE RH ENGINE HOOD SIDE PANEL**

5. **REMOVE SUSPENSION UPPER BRACE**
   3S-GTE (See step 8 on page EM-134)
   5S-FE (See step 8 on page EM-182)

6. **REMOVE CRUISE CONTROL ACTUATOR (w/ CRUISE CONTROL SYSTEM) AND ACCELERATOR LINKAGE**
   3S-GTE (See step 13 on page EM-135)
   5S-FE (See step 11 on page EM-182)

7. **REMOVE FRONT EXHAUST PIPE**
   3S-GTE (See steps 30 and 31 on pages EM-138 and 139)
   5S-FE (See step 29 on page EM-187)

8. **(3S-GTE)**
   REMOVE A/C COMPRESSOR WITHOUT DISCONNECTING HOSES
   (See step 12 on page TC-21)

9. **(5S-FE)**
   REMOVE A/C BELT IDLER PULLEY
   (See step 31 on page EM-187)

10. **(3S-GTE)**
    REMOVE CATALYTIC CONVERTER
    (See step 14 on page EM-64)

11. **(3S-GTE)**
    REMOVE INTERCOOLER
    (See steps 4, 5, 7 to 13 on pages TC-20 to 22)

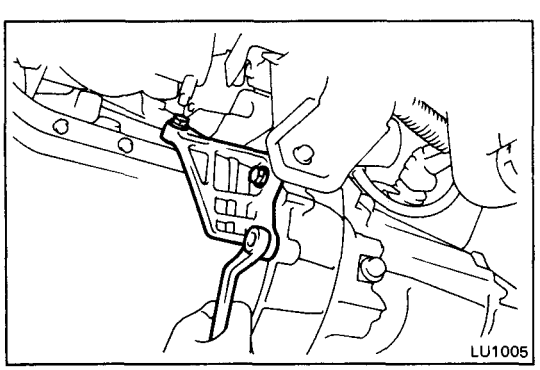

12. **REMOVE STIFFENER PLATE**

    Remove the three bolts and stiffener plate.

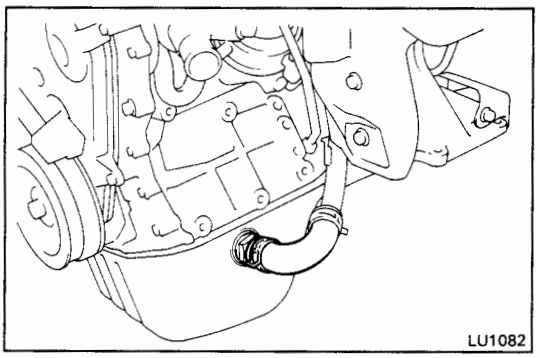

13. DISCONNECT TURBOCHARGER OIL OUTLET HOSE FROM OIL PAN

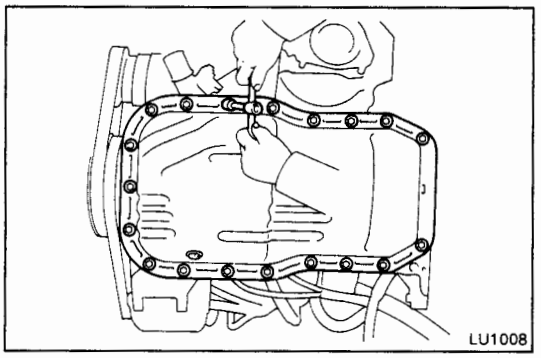

14. REMOVE OIL PAN

(a) Remove the dipstick.

(b) Remove the seventeen bolts and two nuts.

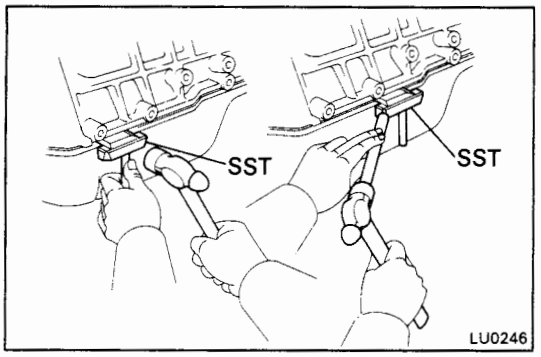

(c) Insert the blade of SST between the cylinder block and oil pan, cut off applied sealer and remove the oil pan.

SST 09032-00100

NOTICE:

- **Do not use SST for the oil pump body side and rear oil seal retainer.**
- **Be careful not to damage the oil pan flange.**

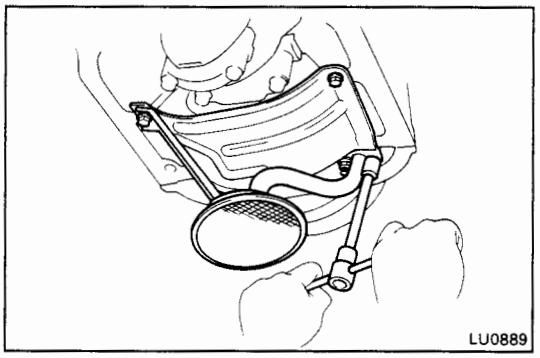

15. REMOVE OIL STRAINER AND BAFFLE PLATE

Remove the two bolts, two nuts, oil strainer, baffle plate and gasket.

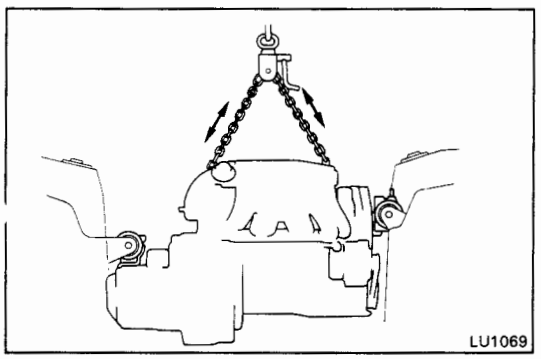

16. SUSPEND ENGINE WITH ENGINE CHAIN HOIST

17. REMOVE TIMING BELT

3S-GTE (See steps 7, 8 and 10 to 22 on pages EM-26 to 31)

5S-FE (See steps 6 to 8 and 10 to 21 on pages EM-47 to 52)

18. REMOVE NO.2 IDLER PULLEY, CRANKSHAFT TIMING PULLEY AND OIL PUMP PULLEY

3S-GTE (See steps 24 and 24 on pages EM-42 and 43)

5S-FE (See steps 24 and 24 on pages EM-42 and 43)

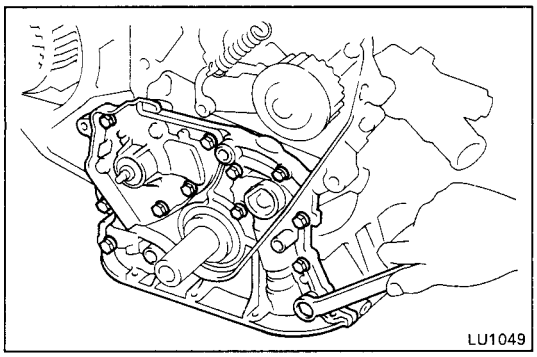

19. REMOVE OIL PUMP

(a) Remove the twelve bolts.

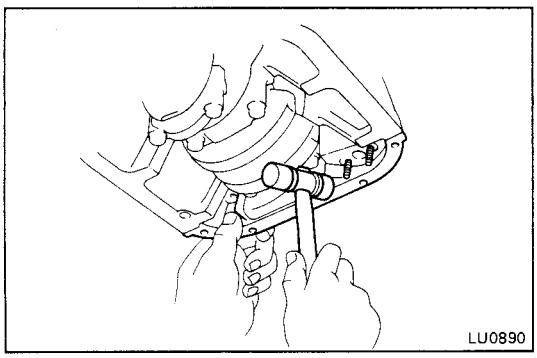

(b) Using a plastic-faced, remove the oil pump by careful tapping the oil pump dody.

(c) Remove the gasket.

COMPONENTS

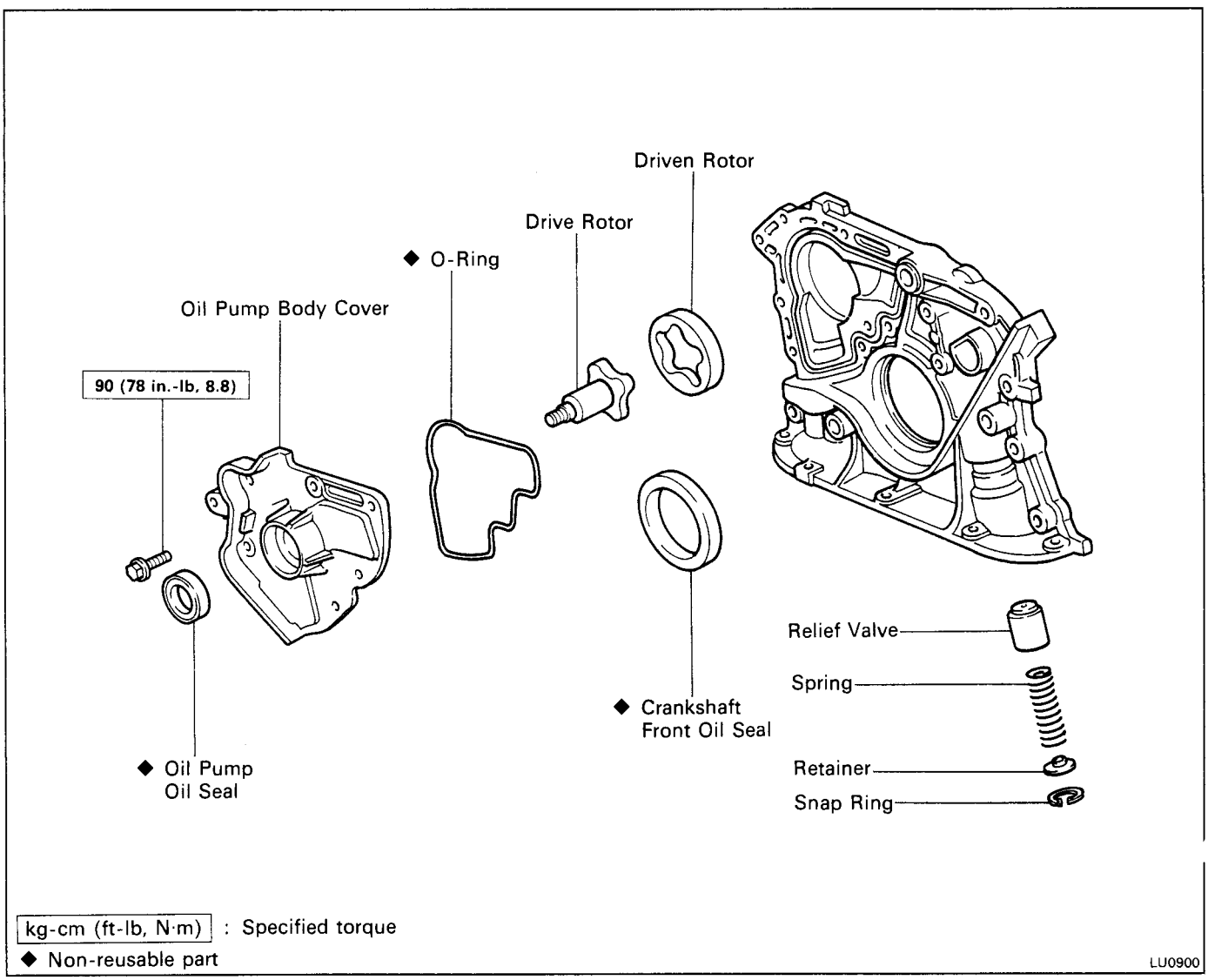

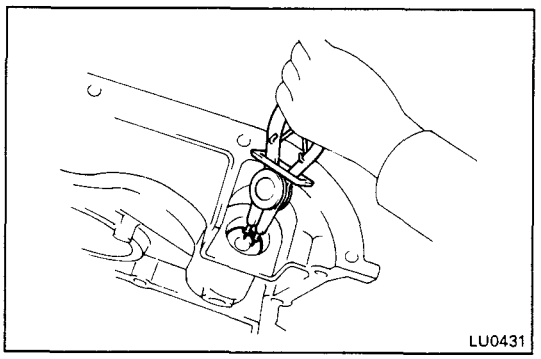

DISASSEMBLY OF OIL PUMP

(See page LU-12)

1. REMOVE RELIEF VALVE

(a) Using snap ring pliers, remove the snap ring.

(b) Remove the retainer, spring and relief valve.

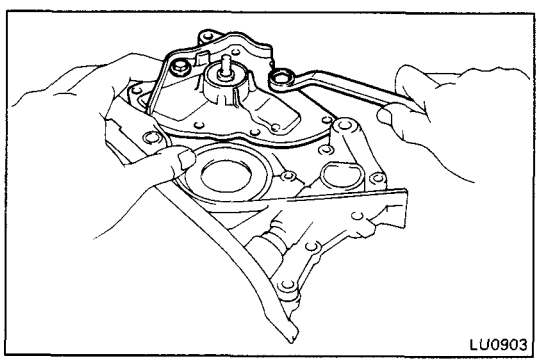

2. REMOVE DRIVE AND DRIVEN ROTORS

Remove the two bolts, pump body cover, O-ring, the drive and driven rotors.

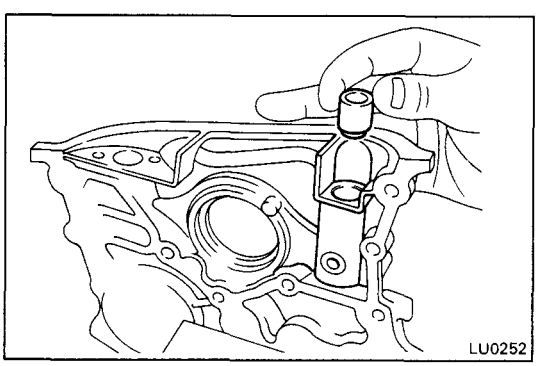

INSPECTION OF OIL PUMP

1. INSPECT RELIEF VALVE

Coat the valve with engine oil and check that it falls smoothly into the valve hole by its own weight.

If it doesnt, replace the relief valve. If necessary, replace the oil pump assembly.

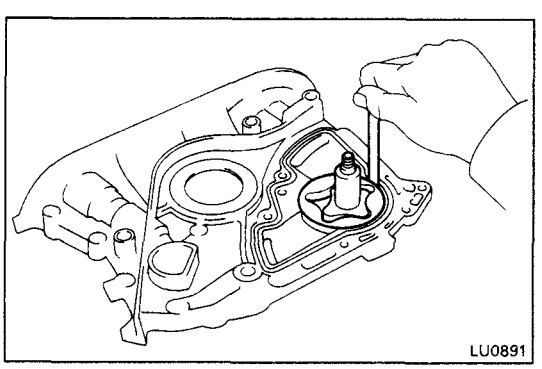

2. INSPECT DRIVE AND DRIVEN ROTORS

A. Inspect rotor body clearance

Using a feeler gauge, measure the clearance between the driven rotor and body.

Standard body clearance: **0.100 – 0.160 mm (0.0039 – 0.0063 in.)**

Maximum body clearance: **0.20 mm (0.0079 in.)**

If the body clearance is greater than maximum, replace the rotors as a set. If necessary, replace the oil pump assembly.

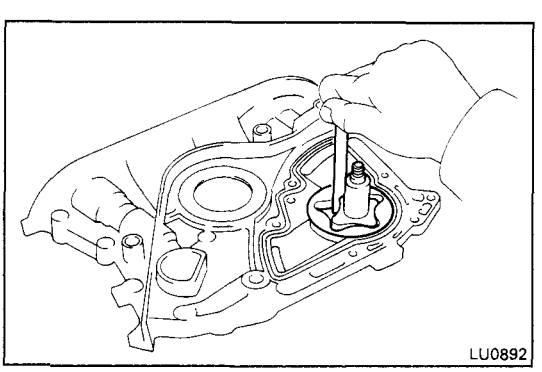

B. Inspect rotor tip clearance

Using a feeler gauge, measure the clearance between the drive and driven rotors.

Standard tip clearance: **0.040 – 0.160 mm (0.0016 – 0.0063 in.)**

Maximum tip clearance: **0.20 mm (0.0079 in.)**

If the tip clearance is greater than maximum, replace the rotors as a set.

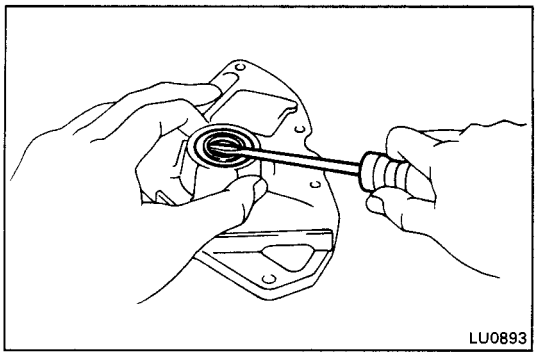

REPLACEMENT OF OIL PUMP OIL SEAL

1. REMOVE OIL SEAL

Using a screwdriver, pry out the oil seal.

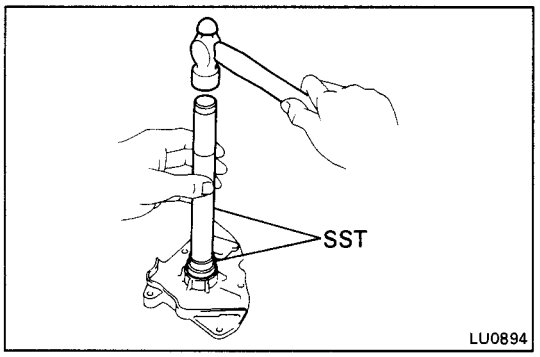

2. INSTALL OIL SEAL

(a) Using SST and a hammer, tap in a new oil seal until its surface is flush with the oil pump cover edge.

SST 09620-30010 (09627-30010, 09631-00020)

(b) Apply MP grease to the oil seal lip.

REPLACEMENT OF CRANKSHAFT FRONT OIL SEAL

(See page EM-160)

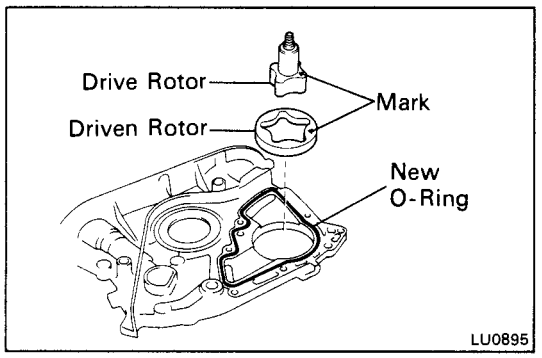

ASSEMBLY OF OIL PUMP

(See page LU-12)

1. INSTALL DRIVE AND DRIVEN ROTORS

(a) Place the drive and driven rotors into pump body with the marks facing the pump body cover side.

(b) Install a new O-ring to the pump body.

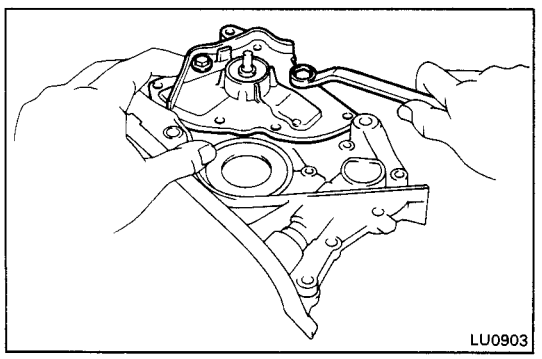

(c) Install the pump body cover with the two bolts.

Torque: 90 kg-cm (78 in.-lb, 8.8 N·m)

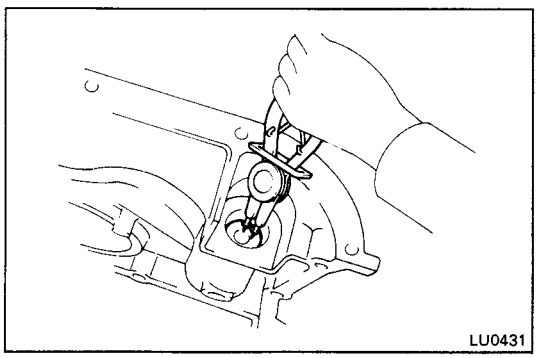

2. INSTALL RELIEF VALVE

(a) Insert the relief valve, spring and retainer into the pump body hole.

(b) Using snap ring pliers, install the snap ring.

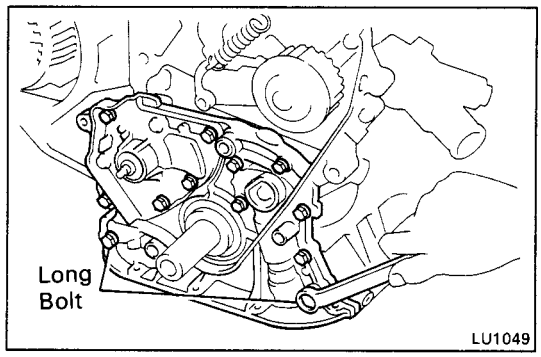

INSTALLATION OF OIL PUMP

(See page LU-9)

1. INSTALL OIL PUMP

Install a new gasket and the oil pump with the twelve bolts.

Torque:
3S-GTE 80 kg-cm (69 in.-lb, 7.8 N·m)
5S-FE 95 kg-cm (82 in.-lb, 9.3 N·m)

HINT: Each bolt length is indicated in the figure.

Bolt length: Long bolt 35 mm (1.38 in.)
Others 25 mm (0.98 in.)

2. INSTALL OIL PUMP PULLEY, CRANKSHAFT TIMING PULLEY AND NO.2 IDLER PULLEY
3S-GTE (See steps 1 to 3 on page EM-35)
5S-FE (See steps 1 to 3 on page EM-55)

3. INSTALL TIMING BELT
3S-GTE (See steps 5 to 8 and 10 to 25 on pages EM-35 to 41)
5S-FE (See steps 5 to 8 and 10 to 20 on pages EM-55 to 60)

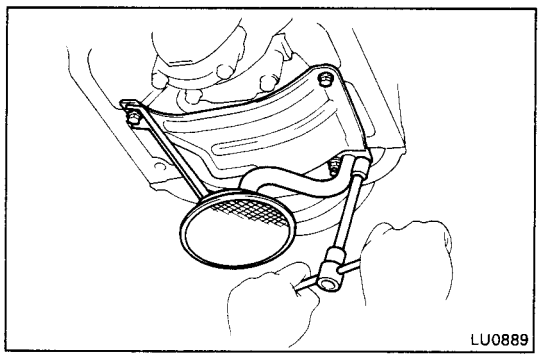

4. REMOVE ENGINE CHAIN HOIST FROM ENGINE

5. INSTALL BAFFLE PLATE AND OIL STRAINER

Install a new gasket, the baffle plate and the oil strainer with the two bolts and two nuts.

Torque: 55 kg-cm (48 in.-lb, 5.4 N·m)

6. INSTALL OIL PAN

(a) Remove any old packing (FIPG) material and be careful not to drop any oil on the contact surfaces of the oil pan and cylinder block.

- Using a razor blade and gasket scraper, remove all the old packing (FIPG) material from the gasket surfaces and sealing groove.
- Thoroughly clean all components to remove all the loose material.
- Using a non-residue solvent, clean both sealing surfaces.

NOTICE: Do not use a solvent which will affect the painted surfaces.

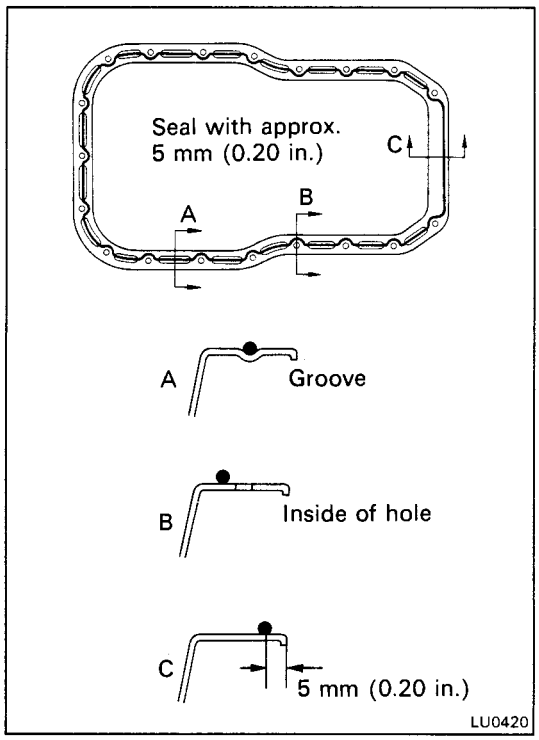

(b) Apply seal packing to the oil pan as shown in the figure.

Seal packing: Part No.08826-00080 or equivalent

- Install a nozzle that has been cut to a 3 – 5 mm (0.12 – 0.20 in.) opening.

HINT: Avoid applying an excessive amount to the surface. Be particularly careful near oil passages.

- Parts must be assembled within 5 minutes of application. Otherwise the material must be removed and reapplied.
- Immediately remove nozzle from the tube and reinstall cap.

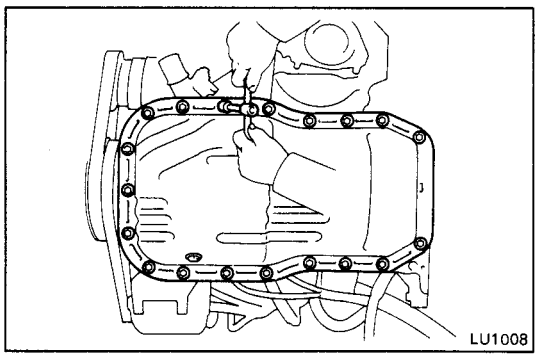

(c) Install the oil pan with the seventeen bolts and four nuts.

Torque: 55 kg-cm (48 in.-lb, 5.4 N·m)

(d) Install the dipstick.

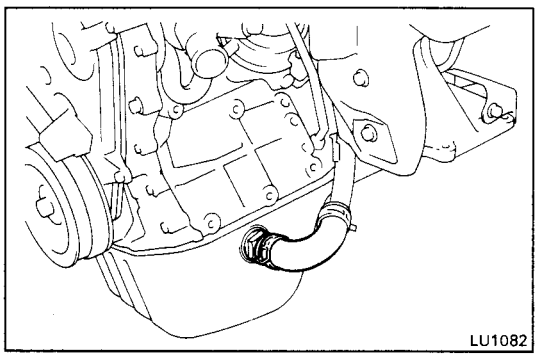

7. CONNECT TURBOCHARGER OIL OUTLET HOSE TO OIL PAN

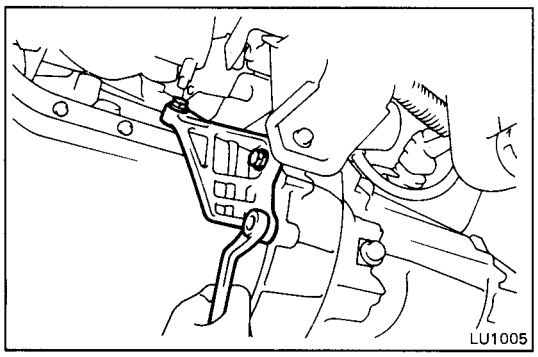

8. INSTALL STIFFENER PLATE

Install the stiffener plate with the two bolts.

Torque: 380 kg-cm (27 ft-lb, 37 N·m)

9. (3S-GTE)
INSTALL INTERCOOLER
(See steps 2 to 8, 10 and 11 on pages TC-23 to 25)

10. (3S-GTE)
INSTALL CATALYTIC CONVERTER
(See step 28 on pages EM-94 and 95)

11. (3S-GTE)
INSTALL A/C COMPRESSOR
(See step 3 on page TC-23)

12. (5S-FE)
INSTALL A/C BELT IDLER PULLEY
(See step 13 on page EM-221)

13. INSTALL FRONT EXHAUST PIPE
3S-GTE (See steps 18 and 19 on pages EM-174 and 175)
5S-FE (See step 15 on pages EM-221 and 222)

14. INSTALL CRUISE CONTROL ACTUATOR (w/ CRUISE CONTROL SYSTEM) AND ACCELERATOR LINKAGE
3S-GTE (See step 36 on page EM-178)
5S-FE (See step 33 on page EM-226)

15. INSTALL SUSPENSION UPPER BRACE
3S-GTE (See step 41 on page EM-179)
5S-FE (See step 36 on page EM-226)

16. CONNECT CABLE TO NEGATIVE TERMINAL OF BATTERY

17. FILL WITH ENGINE OIL (See page LU-8)

18. START ENGINE AND CHECK FOR LEAKS

19. RECHECK ENGINE OIL LEVEL (See page LU-6)

20. INSTALL RH ENGINE HOOD SIDE PANEL

OIL COOLER (3S-GTE)

COMPONENTS

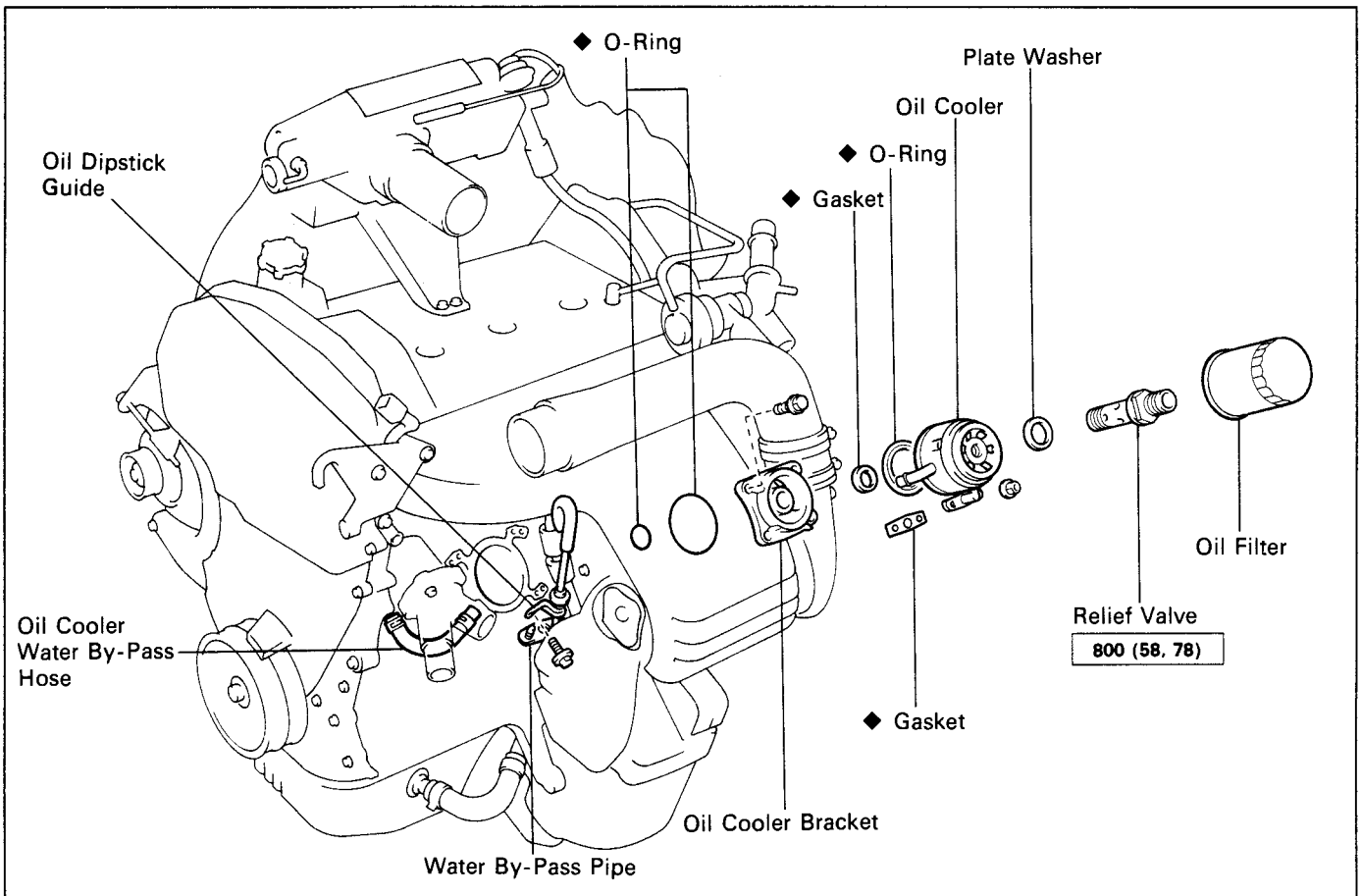

kg-cm (ft-lb, N·m) : Specified torque

◆ Non-reusable part

REMOVAL OF OIL COOLER

1. **DISCONNECT CABLE FROM NEGATIVE TERMINAL OF BATTERY**

   CAUTION: Work must be started after approx. 20 seconds or longer from the time the ignition switch is turned to the "LOCK" position and the negative (–) terminal cable is dosconnected from the battery.

2. **DRAIN ENGINE COOLANT (See page CO-6)**

3. **REMOVE ENGINE UNDER COVERS**

4. **REMOVE RH ENGINE HOOD SIDE PANEL**

5. **REMOVE NO.1 AIR INTAKE CONNECTOR (See step 4 on page TC-20)**

6. **REMOVE A/C COMPRESSOR WITHOUT DISCONNECTING HOSES (See steps 10 to 12 on pages TC-21 and 22)**

7. **REMOVE OIL FILTER (See page LU-7)**

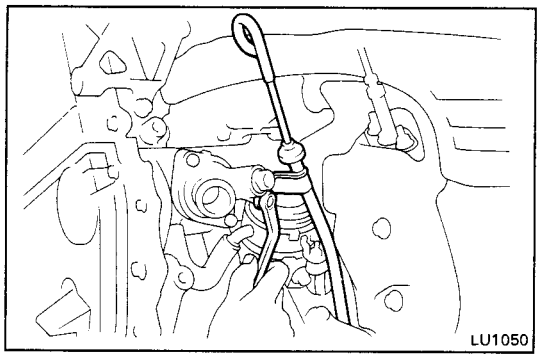

8. DISCONNECT OIL DIPSTICK GUIDE FROM WATER INLET

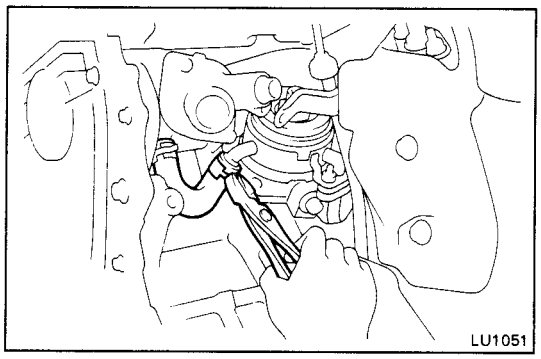

9. DISCONNECT WATER BY-PASS HOSE FROM OIL COOLER

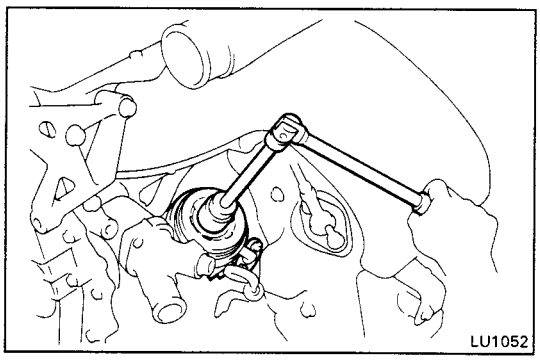

10. REMOVE OIL COOLER

(a) Remove the relief valve and plate washer.

(b) Remove the two nuts, oil cooler and gasket.

(c) Remove the O-ring and gasket from the oil cooler.

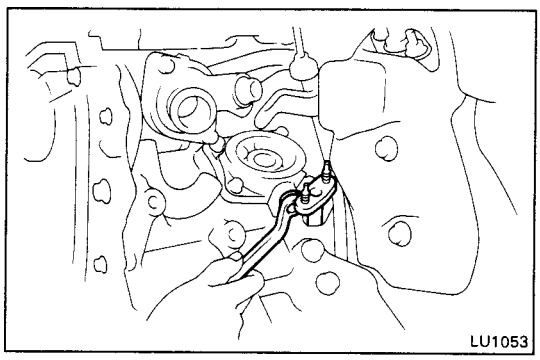

(d) Remove the bolt, and disconnect the water by-pass pipe from the oil cooler bracket.

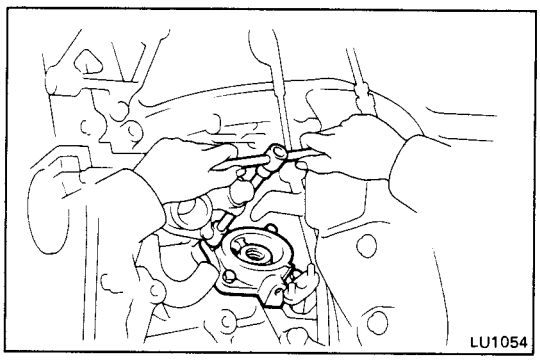

11. REMOVE OIL COOLER BRACKET

(a) Remove the four bolts and oil cooler bracket.

(b) Remove the two O-rings from the oil cooler.

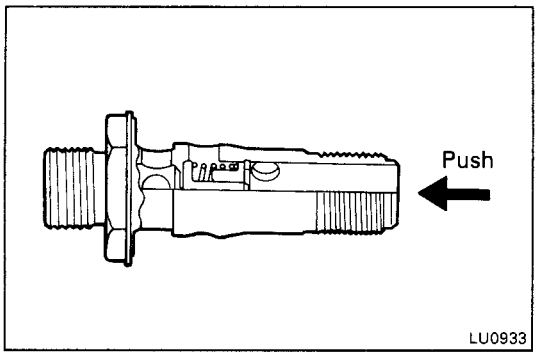

INSPECTION OF OIL COOLER

1. INSPECT RELIEF VALVE

Push the valve with a wooden stick to check if it is stuck.
If stuck, replace the relief valve.

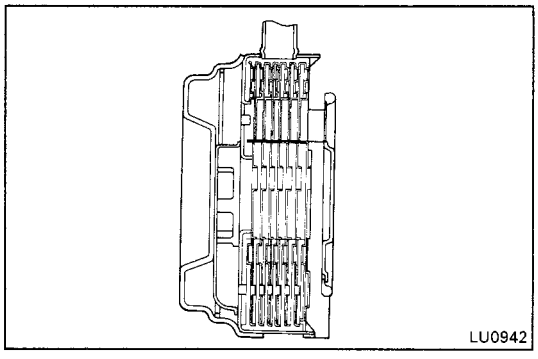

2. INSPECT OIL COOLER

Check the oil cooler for damage or clogging.
If necessary, replace the oil cooler.

INSTALLATION OF OIL COOLER

(See page LU-18)

1. INSTALL OIL COOLER BRACKET

(a) Install two new O-rings to the oil cooler bracket.

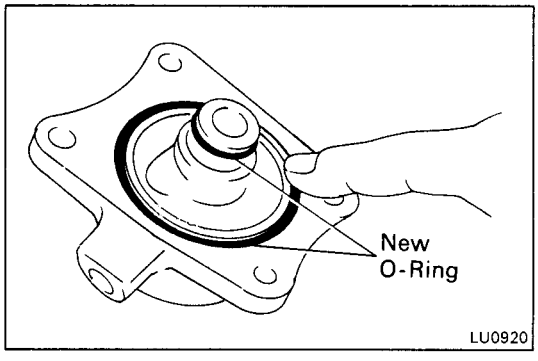

(b) Apply a light coat of engine oil on the small O-ring.

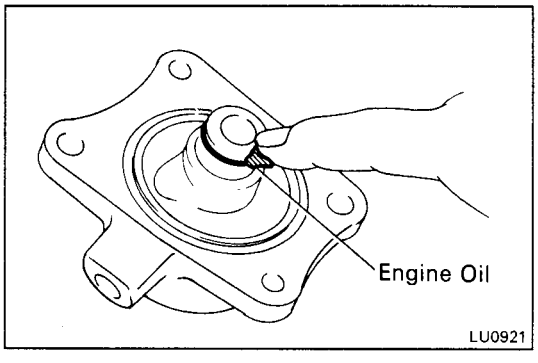

(c) Install the oil cooler bracket with the four bolts.

Torque: 80 kg-cm (69 in.-lb, 7.8 N·m)

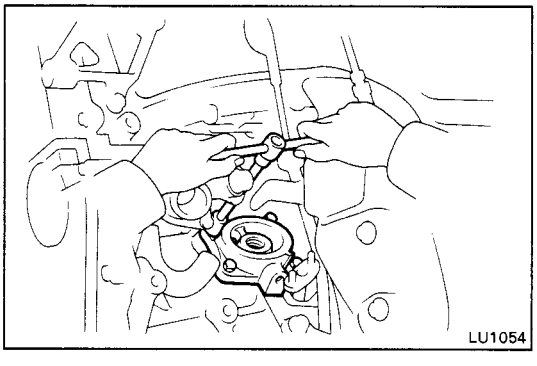

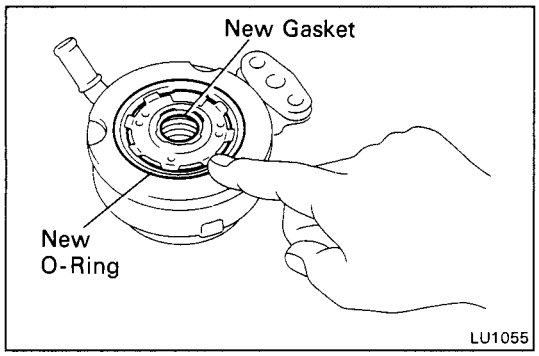

2. INSTALL OIL COOLER

(a) Install new O-ring and gasket to the oil cooler.

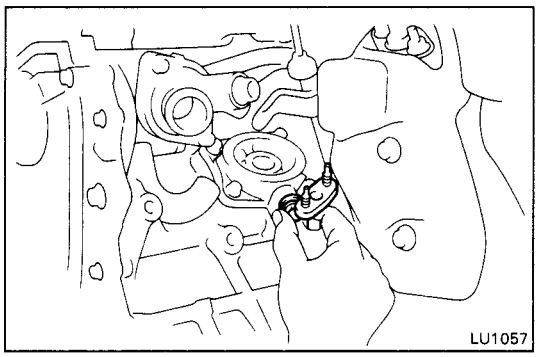

(b) Temporarily install the water by-pass pipe with the bolt.

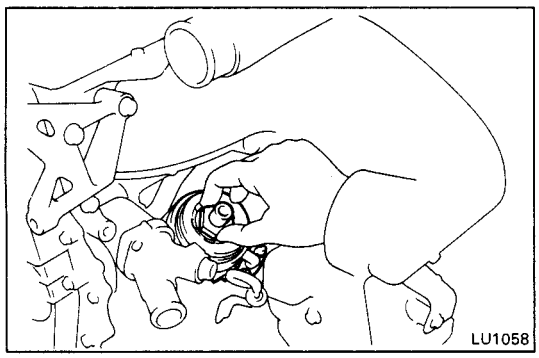

(c) Apply a light coat of engine oil on the threads and under the head of the relief valve.

(d) Place a new gasket on the water by-pass pipe.

(e) Temporarily install the oil cooler with the plate washer, relief valve and two nuts.

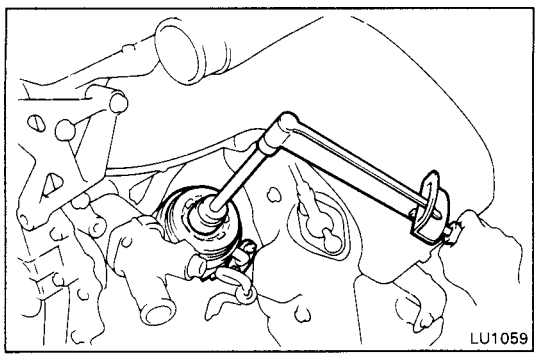

(f) Tighten the relief valve.

Torque: 800 kg-cm (58 ft-lb, 78 N·m)

(g) Tighten the two nuts holding the oil cooler to the water by-pass pipe.

Torque: 120 kg-cm (9 ft-lb, 12 N·m)

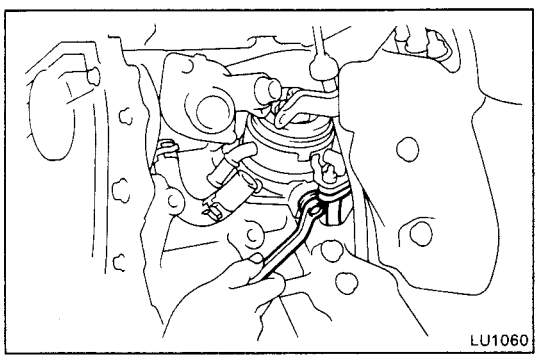

(h) Tighten the bolt holding the water by-pass pipe to oil cooler bracket.

Torque: 180 kg-cm (13 ft-lb, 18 N·m)

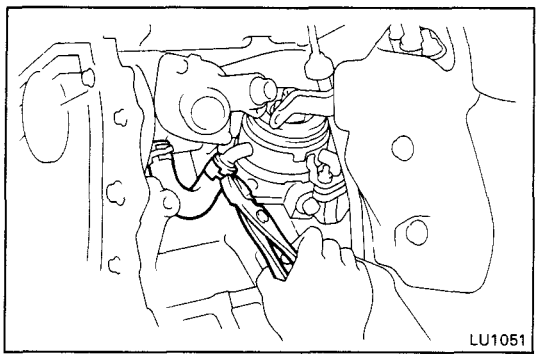

3. CONNECT WATER BY-PASS HOSE TO OIL COOLER

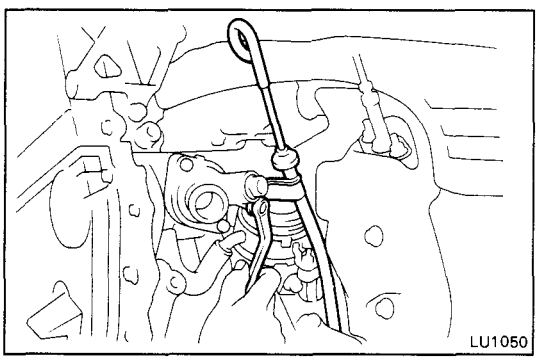

4. INSTALL OIL DIPSTICK GUIDE TO WATER INLET

5. INSTALL OIL FILTER (See page LU-7)

6. INSTALL A/C COMPRESSOR
(See steps 3 to 5 on pages TC-23 and 24)

7. INSTALL NO.1 AIR INTAKE CONNECTOR
(See step 10 on page TC-25)

8. INSTALL RH ENGINE HOOD SIDE PANEL

9. CONNECT CABLE TO NEGATIVE TERMINAL OF BATTERY

10. FILL WITH ENGINE COOLANT (See page CO-7)

11. START ENGINE AND CHECK FOR LEAKS

12. CHECK ENGINE OIL LELEL (See page LU-6)

13. INSTALL ENGINE UNDER COVERS

OIL COOLER (5S-FE)

COMPONENTS

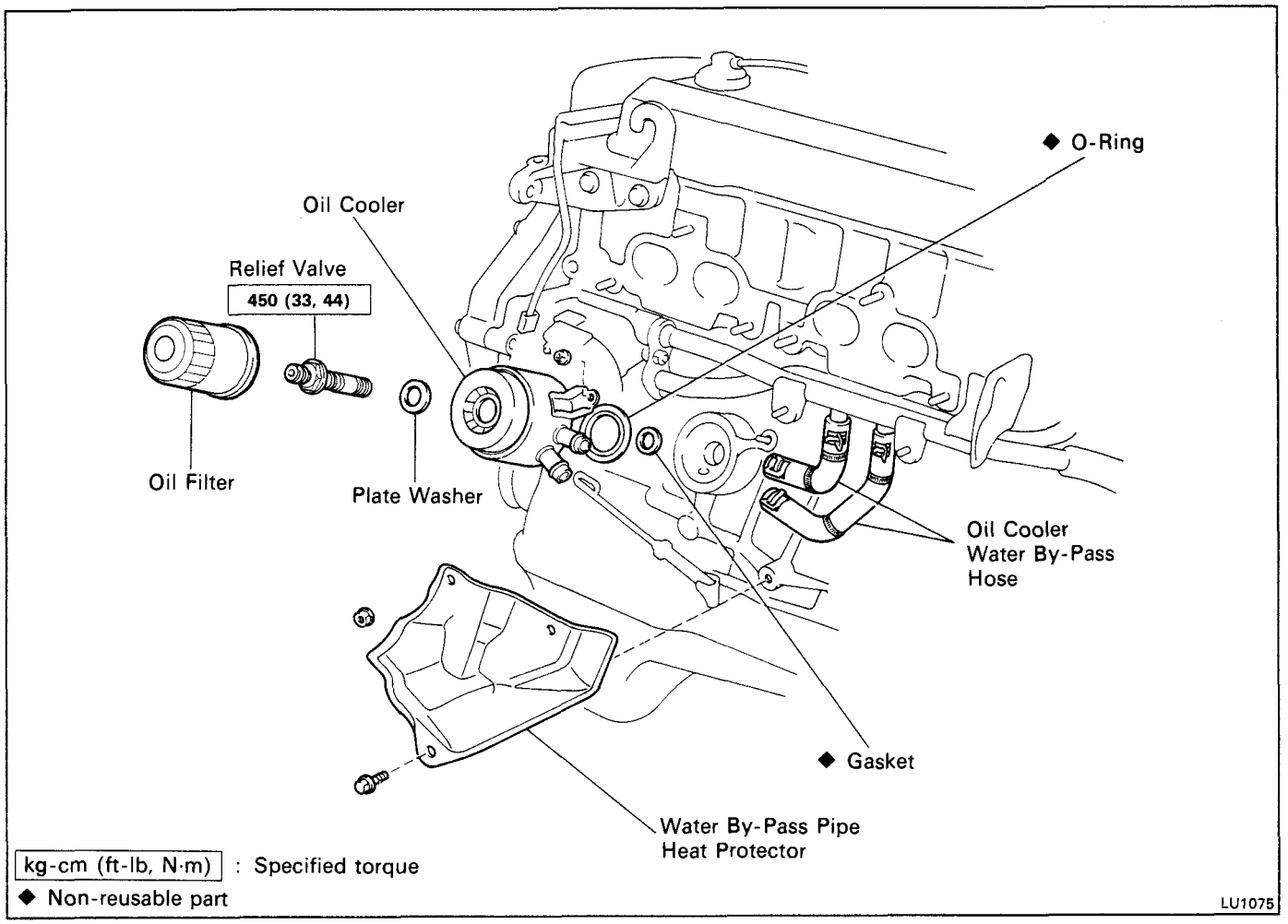

REMOVAL OF OIL COOLER

1. **DISCONNECT CABLE FROM NEGATIVE TERMINAL OF BATTERY**

   CAUTION: Work must be started after approx. 20 seconds or longer from the time the ignition switch is turned to the "LOCK" position and the negative (–) terminal cable is dosconnected from the battery.

2. **DRAIN ENGINE COOLANT (See page CO-6)**

3. **REMOVE ENGINE UNDER COVERS**

4. **REMOVE FRONT EXHAUST PIPE (See step 29 on page EM-187)**

5. **REMOVE EXHAUST MANIFOLD AND CATALYTIC CONVERTER ASSEMBLY (See step 14 on page EM-99)**

6. **REMOVE OIL FILTER (See page LU-7)**

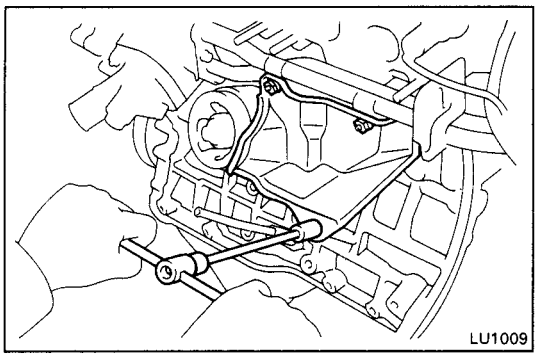

7. REMOVE WATER BY-PASS HOSE HEAT PROTECTOR

Remove the bolt, two nuts and heat protector.

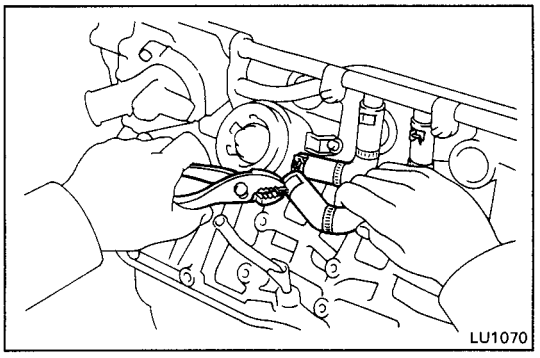

8. DISCONNECT WATER BY-PASS HOSES FROM OIL COOLER

Disconnect the two water by-pass hoses.

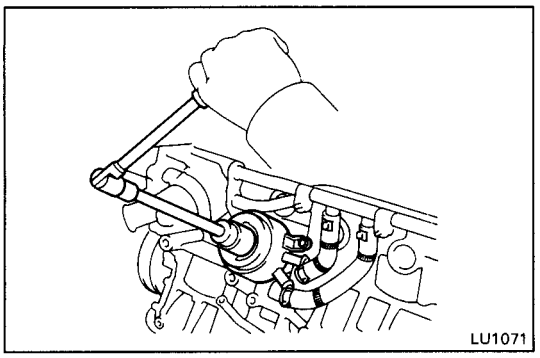

9. REMOVE OIL COOLER

(a) Remove the relief valve and plate washer.

(b) Remove the nut and oil cooler.

(c) Remove the O-ring and gasket from the oil cooler.

INSPECTION OF OIL COOLER

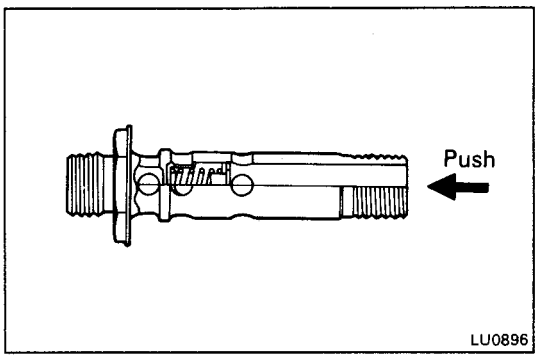

1. INSPECT RELIEF VALVE

Push the valve with a wooden stick to check if it is stuck.

If stuck, replace the relief valve.

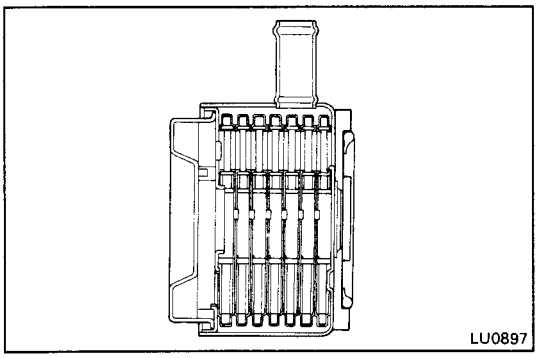

2. INSPECT OIL COOLER

Check the oil cooler for damage or clogging.

If necessary, replace the oil cooler.

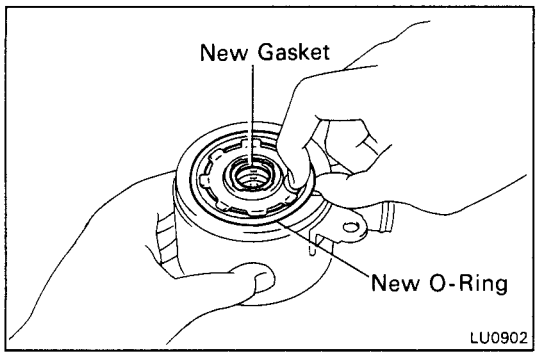

INSTALLATION OF OIL COOLER

(See page LU-23)

1. **INSTALL OIL COOLER**
   (a) Install new O-ring and gasket to the oil cooler.

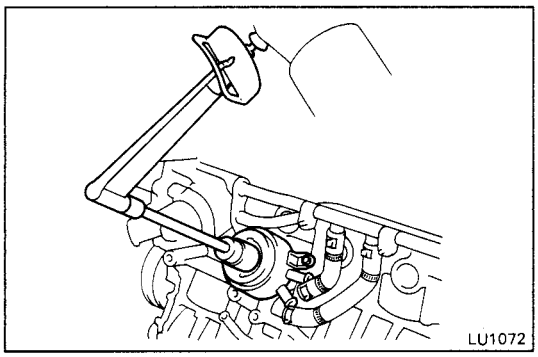

   (b) Apply a light coat of engine oil on the threads and under the head of the relief valve.
   (c) Temporarily install the nut.
   (d) Install the oil cooler with the plate washer and relief valve.

   Torque: 450 kg-cm (33 ft-lb, 44 N·m)

   (e) Tighten the nut.

   Torque: 80 kg-cm (69 in.-lb, 7.8 N·m)

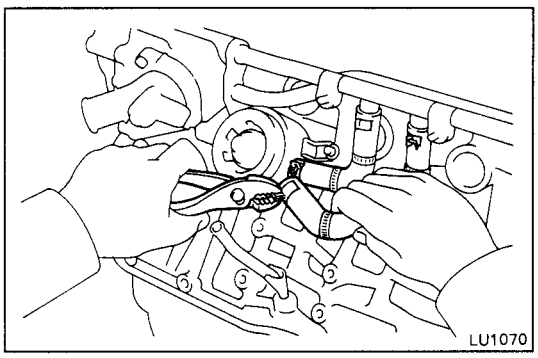

2. **CONNECT WATER BY-PASS HOSES**
   Connect the two water by-pass hoses.

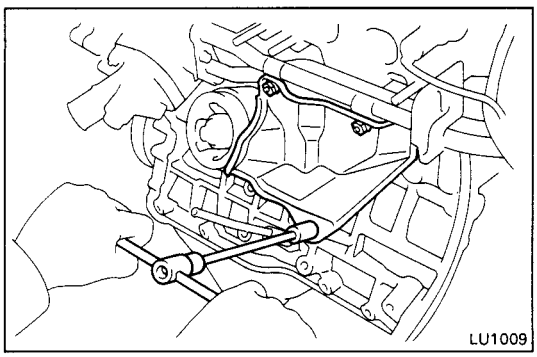

3. **INSTALL WATER BY-PASS HOSE HEAT PROTECTOR**
   Install the heat protector with the bolt and two nuts.
4. **INSTALL OIL FILTER (See page LU-7)**
5. **INSTALL EXHAUST MANIFOLD AND CATALYTIC CONVERTER ASSEMBLY**
   (See step 25 on pages EM-130 and 131)
6. **INSTALL FRONT EXHAUST PIPE**
   (See step 15 on pages EM-221 and 222)
7. **CONNECT CABLE TO NEGATIVE TERMINAL OF BATTERY**
8. **FILL WITH ENGINE COOLANT (See page CO-7)**
9. **START ENGINE AND CHECK FOR LEAKS**
10. **CHECK ENGINE OIL LELEL (See page LU-6)**
11. **INSTALL ENGINE UNDER COVERS**

OIL NOZZLES (3S-GTE)

COMPONENTS

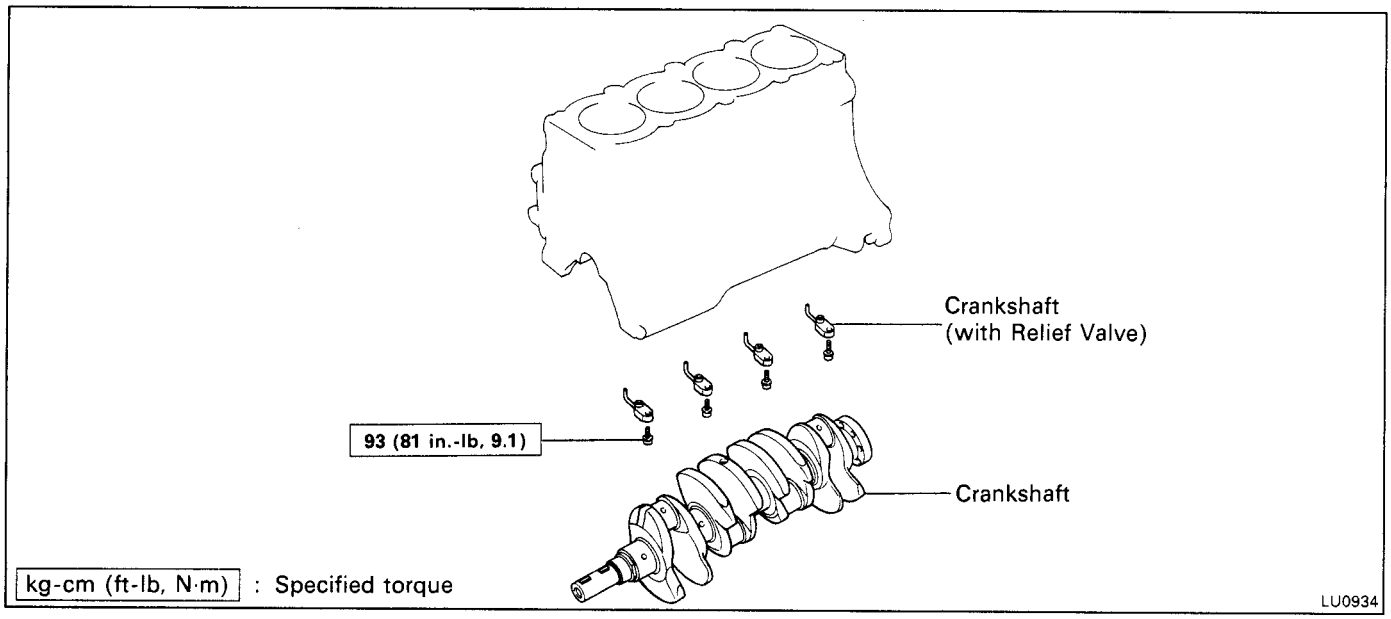

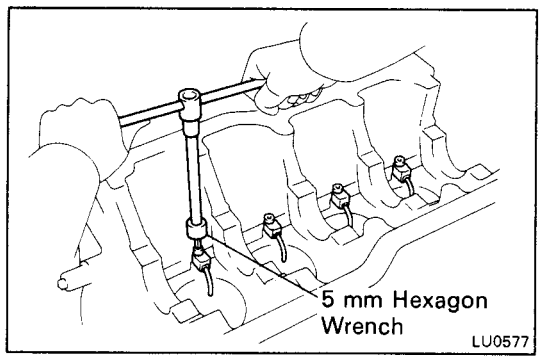

REMOVAL OF OIL NOZZLES

1. **REMOVE CRANKSHAFT (See pages EM-134 to 150)**
2. **REMOVE OIL NOZZLES (WITH RELIEF VALVES)**
   Using a 5 mm hexagon wrench, remove the bolt and oil nozzle. Remove the four oil nozzles.

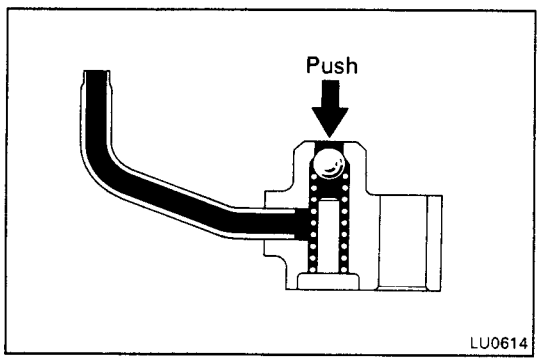

INSPECTION OF OIL NOZZLES

INSPECT RELIEF VALVES (OIL NOZZLES)

Push the valve with a wooden stick to check if it is stuck.

If stuck, replace the relief valve.

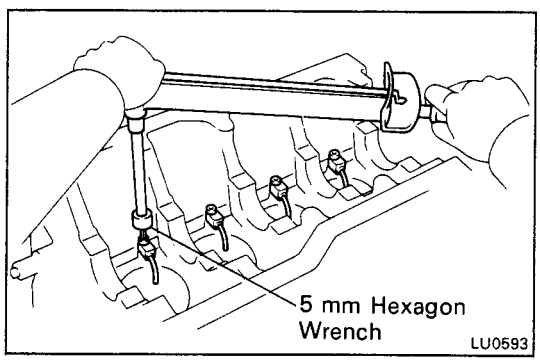

INSTALLATION OF OIL NOZZLES

1. **INSTALL OIL NOZZLES (WITH RELIEF VALVES)**
   Using a 5 mm hexagon wrench, install the oil nozzle with the bolt. Install the four oil nozzles.
   Torque: 93 kg-cm (81 in.-lb, 9.1 N·m)
2. **INSTALL CRANKSHAFT (See pages EM-164 to 180)**

IGNITION SYSTEM

	Page
PRECAUTIONS	IG-2
TROUBLESHOOTING	IG-3
IGNITION SYSTEM CIRCUIT	IG-4
ON-VEHICLE INSPECTION (3S-GTE)	IG-5
ON-VEHICLE INSPECTION (5S-FE)	IG-10
DISTRIBUTOR (3S-GTE)	IG-14
DISTRIBUTOR (5S-FE)	IG-19

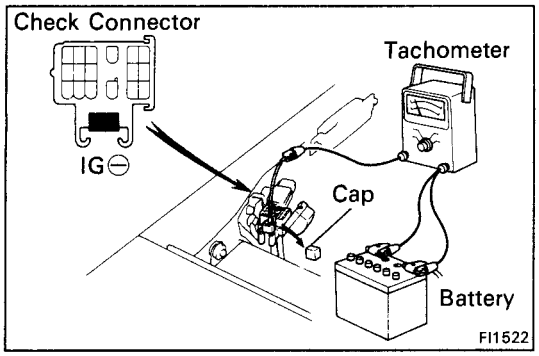

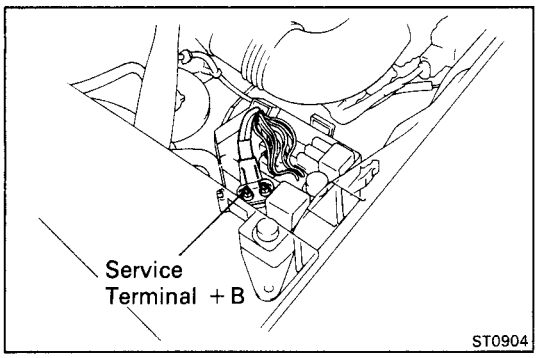

PRECAUTIONS

1. Do not leave the ignition switch on for more than 10 minutes if the engine will not start.

2. With a tachometer connected to the system, connect the test probe of the tachometer to terminal IG⊖ of the check connector.

3. With a tachometer connected to the system, connect the power source probe of the tachometer to service terminal +B of the engine compartment relay box.

4. As some tachometers are not compatible with this ignition system, we recommend that you confirm the compatibility of yours before use.

5. NEVER allow the tachometer terminal to touch ground as this could damage the igniter and/or ignition coil.

6. Do not disconnect the battery when the engine is running.

7. Check that the igniter is properly grounded to the body.

TROUBLESHOOTING

Problem	Possible cause	Remedy	Page
Engine will not start hard to start (cranks ok)	Incorrect ignition timing	Reset timing	IG-17, 22
	Ignition problems		
	● Ignition coil	Inspect coil	IG-8, 12
	● Igniter	Inspect igniter	IG-9, 13
	● Distributor	Inspect distributor	IG-9, 13
	● High-tension cords	Inspect high-tension cords	IG-6, 11
	Ignition wiring disconnected or broken	Inspect wiring	
Rough idle or stalls	Spark plug faulty	Inspect plugs	IG-6, 11
	Ignition wiring faulty	Inspect wiring	
	Incorrect ignition timing	Reset timing	IG-17, 22
	Ignition problems		
	● Ignition coil	Inspect coil	IG-8, 12
	● Igniter	Inspect igniter	IG-9, 13
	● Distributor	Inspect distributor	IG-9, 13
	● High-tension cords	Inspect high-tension cords	IG-6, 11
Engine hesitates/ poor accleration	Spark plug faulty	Inspect plugs	IG-6, 11
	Ignition wiring faulty	Inspect wiring	
	Incorrect ignition timing	Reset timing	IG-17, 22
Engine dieseling (runs sfter ignition) (switch is turned off)	Incorrect ignition timing	Reset timing	IG-17, 22
Muffler explosion (after fire) all the time	Incorrect ignition timing	Reset timing	IG-17, 22
Engine backfires	Incorrect ignition timing	Reset timing	IG-17, 22
Poor gasoline mileage	Spark plug faulty	Inspect plugs	IG-6, 11
	Incorrect ignition timing	Reset timing	IG-17, 22
Engine overheats	Incorrect ignition timing	Reset timing	IG-17, 22

IGNITION SYSTEM CIRCUIT

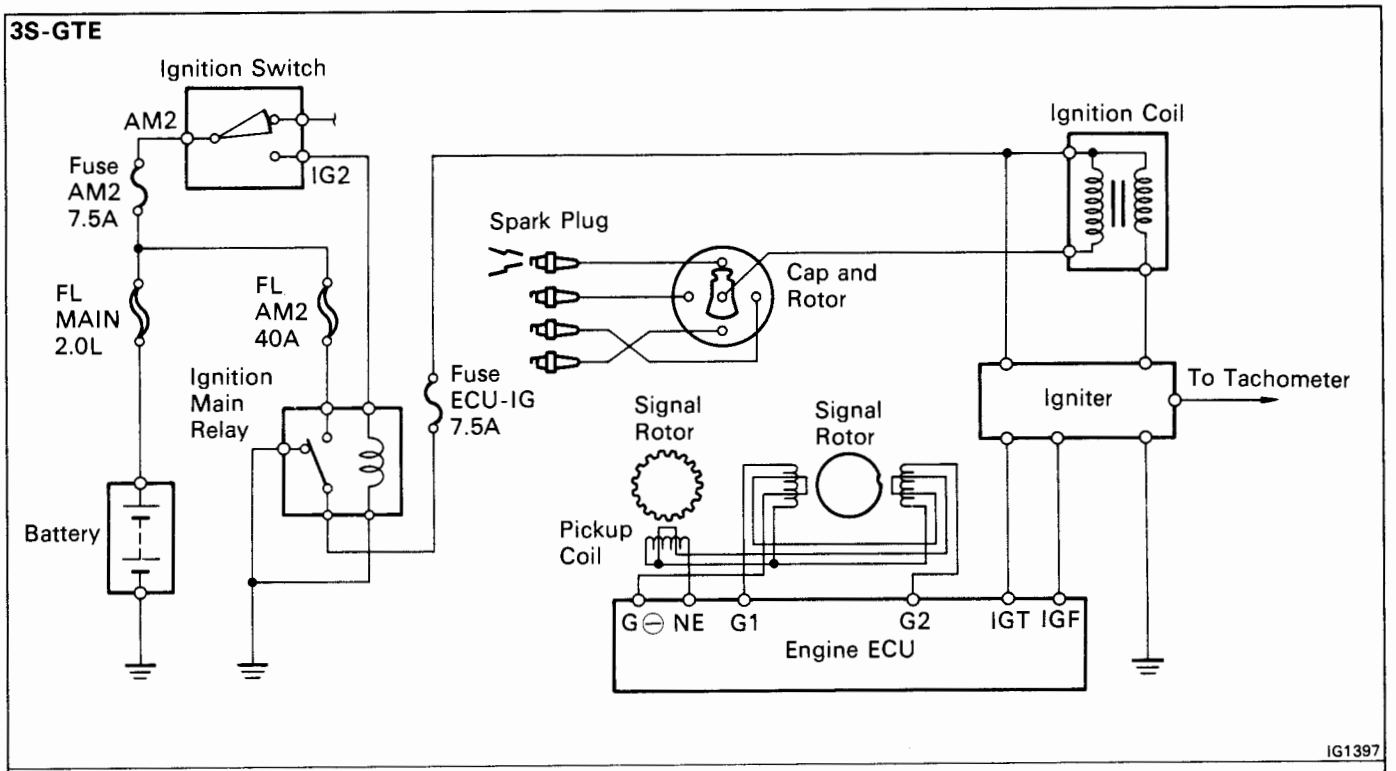

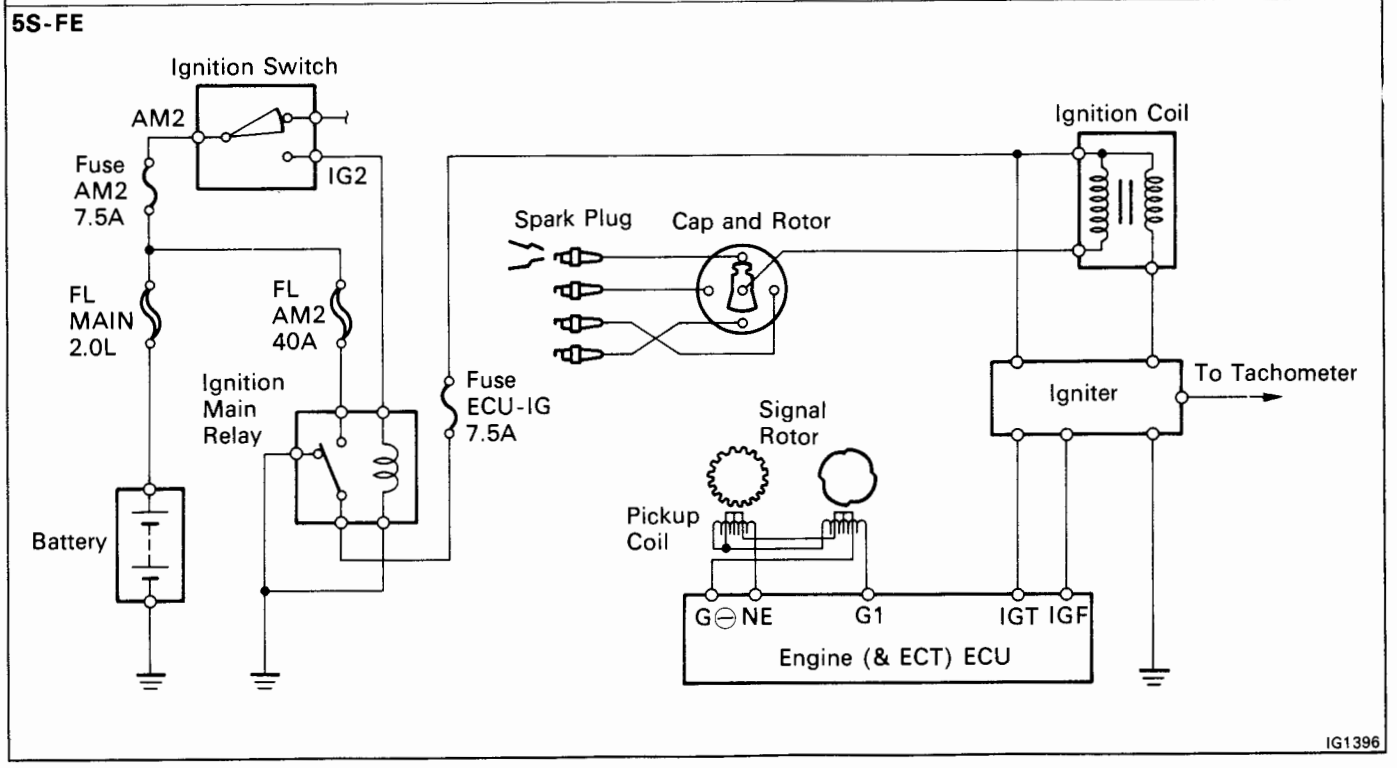

ELECTRONIC SPARK ADVANCE (ESA)

The ECU is programmed with data for optimum ignition timing under any and all operating conditions. Using data provided by sensors which monitor various engine functions (rpm, intake air volume, eng. temperature, etc.) the microcomputer (ECU) triggers the spark at precisely the right instant.

ON-VEHICLE INSPECTION (3S-GTE)

SPARK TEST

CHECK THAT SPARK OCCURS

(a) Disconnect the high-tension cord from the distributor.

(b) Hold the end about 12.5 mm (0.50 in.) from the body of car.

(c) Check if spark occurs while engine is being cranked.

HINT: To prevent gasoline from being injected from injectors during this test, crank the engine for no more than 1 – 2 seconds at a time.

If the spark does not occurs, perform the test as follows:

SPARK TEST

↓ NO

CHECK CONNECTION OF IGNITION COIL. IGNITER AND DISTRIBUTOR CONNECTOR → BAD → Connect securely.

↓ OK

CHECK RESISTANCE OF HIGH-TENSION CORD (See page IG-6)
Maximum resistance: 25 KΩ per cord → BAD → Replace the cord(s).

↓ OK

CHECK POWER SUPPLY TO IGNITION COIL AND IGNITER
1. Ignition switch turn to ON.
2. Check that there is battery voltage at Ignition coil positive(+) terminal.

→ BAD → Check wiring between ignition switch to ignition coil and igniter.

↓ OK

CHECK RESISTANCE OF IGNITION COIL (See page IG-8)
Resistance (Cold):
Primary 0.40 – 0.50 Ω
Secondary 10.0 – 14.0 Ω

→ BAD → Replace the ignition coil.

↓ OK

CHECK RESISTANCE OF SIGNAL GENERATOR (PICUP COIL) (See page IG-9)
Resistance (Cold):
G1 and G⊖ 140 – 180 Ω
G2 and G⊖ 140 – 180 Ω
NE and G⊖ 180 – 220 Ω

→ BAD → Replace the distributor housing assembly.

↓ OK

CHECK AIR GAP OF DISTRIBUTOR (See page IG-9)
Air gap: 0.2 – 0.4 mm (0.008 – 0.016 in.) → BAD → Replace the distributor housing assembly.

↓ OK

CHECK IGT SIGNAL FROM ECU (See page FI-45) → BAD → Check wiring between ECU, distributor and igniter, only then try another ECU.

↓ OK

TRY ANOTHER IGNITER

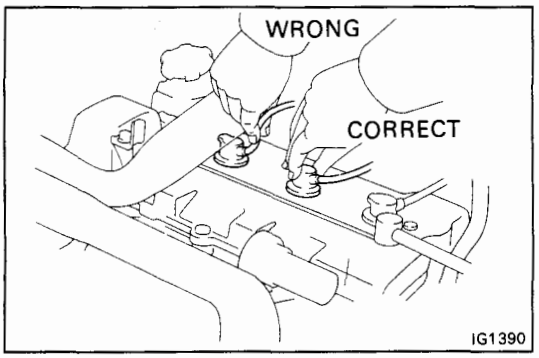

INSPECTION OF HIGH-TENSION CORDS

1. **DISCONNECT HIGH-TENSION CORDS FROM SPARK PLUGS**

   Disconnect the high-tension cords at rubber boot. DO NOT pull on the cords.

   NOTICE: Pulling on or bending the cords may damage the conductor inside.

2. **DISCONNECT HIGH-TENSION CORD FROM IGNITION COIL (See step 3 on pages IG-14 and 15)**

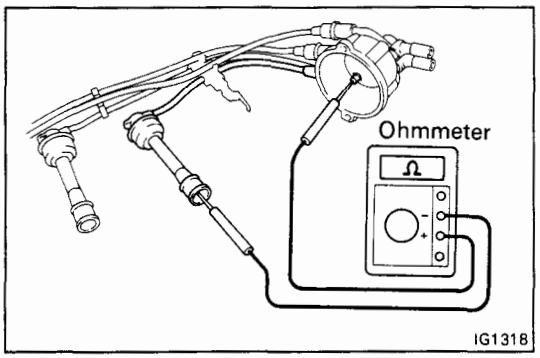

3. **REMOVE DISTRIBUTOR CAP WITHOUT DISCONNECTING HIGH-TENSION CORDS**

4. **INSPECT HIGH-TENSION CORD RESISTANCE**

   Using an ohmmeter, measure the resistance without disconnecting the distributor cap.

   Maximum resistance: 25 kΩ per cord

   If the resistance is greater than maximum, check the terminals. If necessary, replace the high-tension cord and/or distributor cap.

5. **REINSTALL DISTRIBUTOR CAP**

6. **RECONNECT HIGH-TENSION CORD TO IGNITION COIL (See step 5 on pages IG-16 and 17)**

7. **RECONNECT HIGH-TENSION CORDS TO SPARK PLUGS**

INSPECTION OF SPARK PLUGS

NOTICE:

- **Never use a wire brush for cleaning.**
- **Never attempt to adjust the electrode gap on used spark plug.**
- **Spark plug should be replaced every 100,000 km (60,000 miles).**

1. **DISCONNECT HIGH-TENSION CORDS FROM SPARK PLUGS**

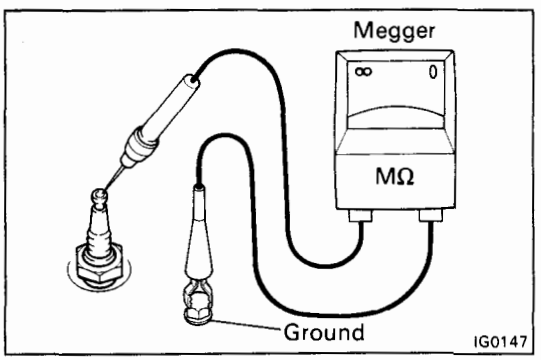

2. **INSPECT ELECTRODE**

   Using a megger (insulation resistance meter), measure the insulation resistance.

   Correct insulation resistance: 10 MΩ or more

   If the resistance is less than specified, proceed to step 4.

   HINT: If a megger is not avariable, the following simple method of inspection provides fairy accurate results.

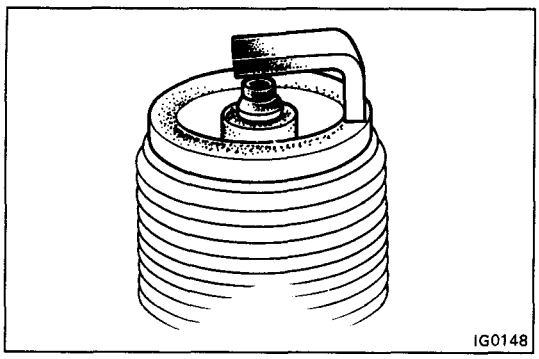

(Simple Method)

(a) Quickly race the engine to 4,000 rpm five times.

(b) Remove the spark plug. (See step 3)

(c) Visually check the spark plug.

If the electrode is dry . . . Okey

If the electrode is wet . . . Proceed to step 3

(d) Reinstall the spark plug.
(See step 7 on page IG-8)

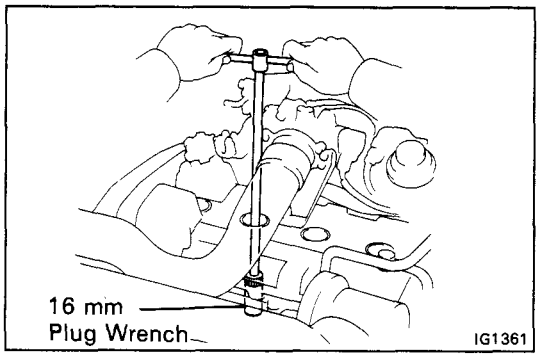

3. REMOVE SPARK PLUGS

Using a 16 mm plug wrench, remove the spark plug.

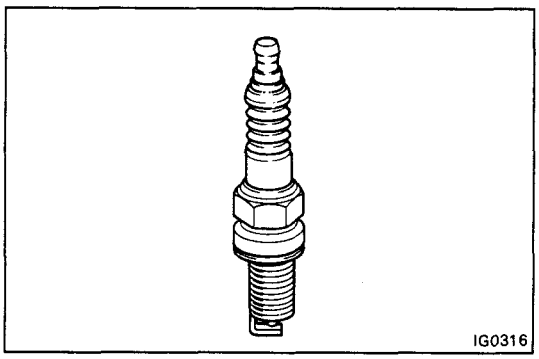

4. VISUALLY INSPECT SPARK PLUGS

Check the spark plug for thread damage and insulator damage.

If abnormal, replace the spark plug.

Recommended spark plug: ND PK20R8
NGK BKR6EP8

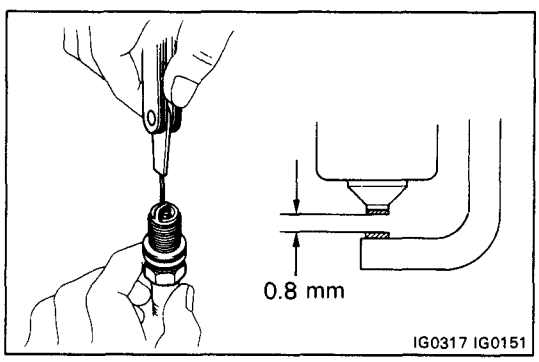

5. INSPECT ELECTRODE CAP

Maximum electrode gap: 1.0 mm (0.39 in.)

If the gap is greater than maximum, replace the spark plug.

Correct electrode gap of new spark plug:
0.8 mm (0.31 in.)

NOTICE: If adjusting the gap of a new spark plug, bent only the base of the ground electrode. Do not touch the tip. Never attempt to adjust the gap on the used plug.

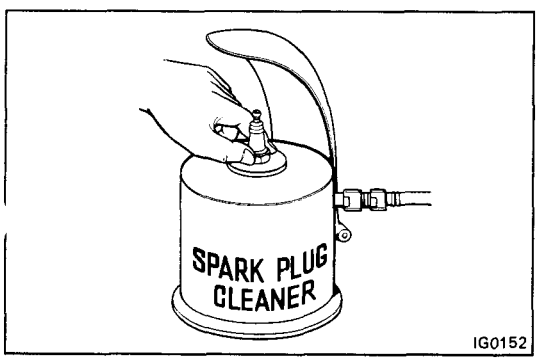

6. CLEAN SPARK PLUGS

If the electrode has traces of wet carbon, allow it to dry and then clean with a spark plug cleaner.

Air pressure: Below 6 kg/cm² (85 psi, 588 kPa)

Duration: 20 seconds or less

HINT: If there are traces of oil, remove it with gasoline before using the spark plug cleaner.

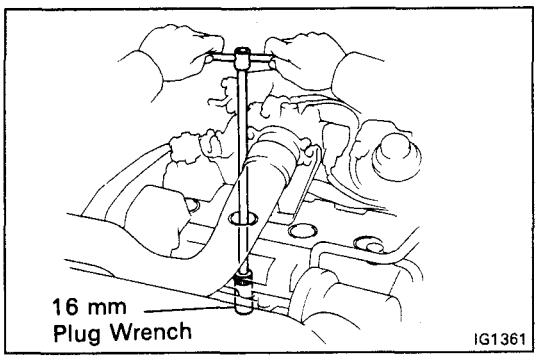

7. **INSTALL SPARK PLUGS**

   Using a 16 mm plug wrench, install the spark plug.

   Torque: 180 kg-cm (13 ft-lb, 18 N·m)

8. **RECONNECT HIGH-TENSION CORDS TO SPARK PLUGS**

INSPECTION OF IGNITION COIL

1. **DISCONNECT IGNITION COIL CONNECTOR**

2. **DISCONNECT HIGH-TENSION CORD FROM IGNITION COIL (See step 3 on pages IG-14 and 15)**

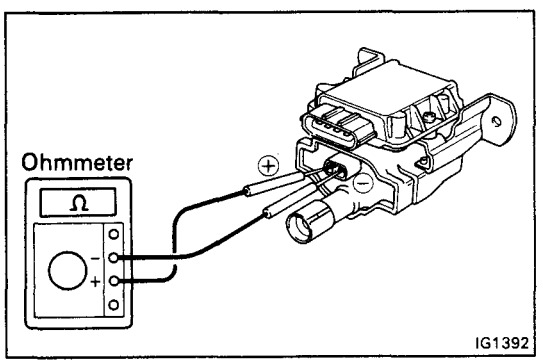

3. **INSPECT PRIMARY COIL RESISTANCE**

   Using an ohmmeter, measure the resistance between positive (+) and negative (–) terminals.

   Primary coil resistance (Cold): 0.41 – 0.50 Ω

   If the resistance is not as specified, replace the ignition coil.

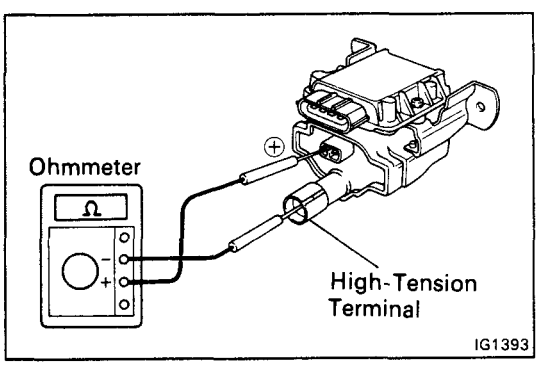

4. **INSPECT SECONDARY COIL RESISTANCE**

   Using an ohmmeter, measure the resistance between positive (+) and high-tension terminals

   Secondary coil resistance (Cold): 10.0 – 14.0 kΩ

   If the resistance is not as specified, replace the ignition coil.

5. **RECONNECT HIGH-TENSION CORD TO IGNITION COIL (See step 5 on pages IG-16 and 17)**

6. **RECONNECT IGNITION COIL CONNECTOR**

INSPECTION OF DISTRIBUTOR

1. **DISCONNECT DISTRIBUTOR CONNECTOR**
2. **REMOVE DISTRIBUTOR CAP**
3. **REMOVE ROTOR**

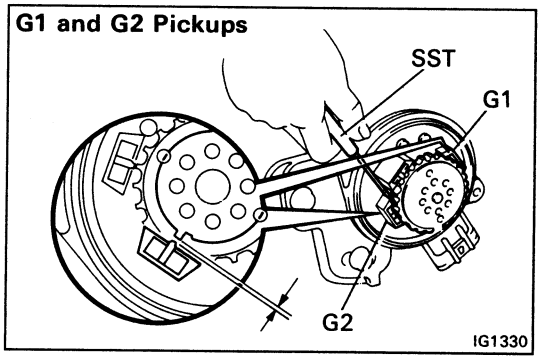

4. **INSPECT AIR GAP**

   Using SST (G1 and G2 pickups) and a feeler gauge (NE pickup), measure the air gap between the signal rotor and pickup coil projection.

   SST 09240-00020 for G1 and G2 pickups

   Air gap: 0.2 – 0.4 mm (0.008 – 0.016 in.)

   If the air gap is not as specified, replace the distributor housing assembly.

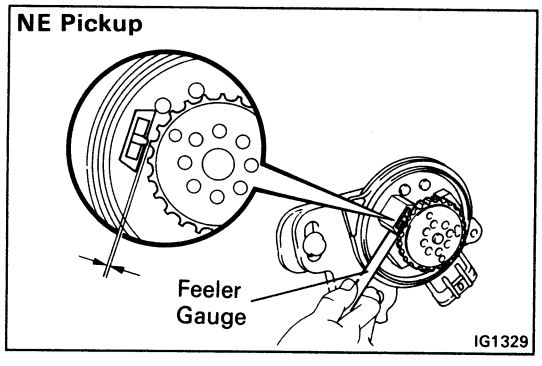

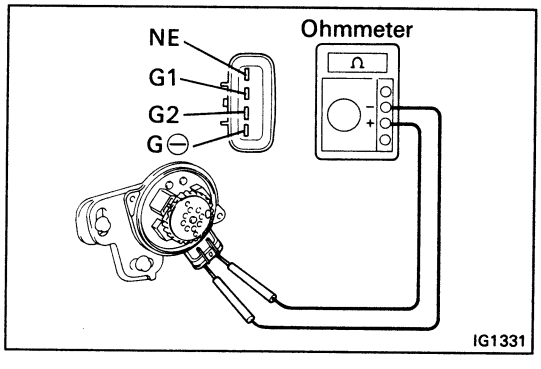

5. **INSPECT SIGNAL GENERATOR (PICKUP COIL) RESISTANCE**

   Using an ohmmeter, measure the resistance between terminals.

   Pickup coil resistance (Cold):
   G1 and G⊖ 140 – 180 Ω
   G2 and G⊖ 140 – 180 Ω
   NE and G⊖ 180 – 220 Ω

   If the resistance is not as specified, replace the distributor housing assembly.

6. **REINSTALL ROTOR**
7. **REINSTALL DISTRIBUTOR CAP**
8. **RECONNECT DISTRIBUTOR CONNECTOR**

INSPECTION OF IGNITER

(See procedure Spark Test on page IG-5)

ON-VEHICLE INSPECTION (5S-FE)

SPARK TEST

CHECK THAT SPARK OCCURS

(a) Disconnect the high-tension cord from the distributor.

(b) Hold the end about 12.5 mm (0.50 in.) from the body of car.

(c) Check if spark occurs while engine is being cranked.

HINT: To prevent gasoline from being injected from injectors during this test, crank the engine for no more than 1 – 2 seconds at a time.

If the spark does not occurs, perform the test as follows:

SPARK TEST

↓ NO

CHECK CONNECTION OF IGNITION COIL. IGNITER AND DISTRIBUTOR CONNECTOR → BAD → Connect securely.

↓ OK

CHECK RESISTANCE OF HIGH-TENSION CORD (See page IG-11)
Maximum resistance: 25 KΩ per cord → BAD → Replace the cord(s).

↓ OK

CHECK POWER SUPPLY TO IGNITION COIL AND IGNITER
1. Ignition switch turn to ON.
2. Check that there is battery voltage at Ignition coil positive(+) terminal.

→ BAD → Check wiring between ignition switch to ignition coil.

↓ OK

CHECK RESISTANCE OF IGNITION COIL (See page IG-12)
Resistance (Cold):
Primary 0.40 – 0.50 Ω
Secondary 10.0 – 14.0 kΩ

→ BAD → Replace the ignition coil.

↓ OK

CHECK RESISTANCE OF SIGNAL GENERATOR (PICUP COIL) (See page IG-13)
Resistance (Cold): 170 – 210 Ω → BAD → Replace the distributor housing assembly.

↓ OK

CHECK AIR GAP OF DISTRIBUTOR (See page IG-13)
Air gap: 0.2 – 0.4 mm (0.008 – 0.016 in.) → BAD → Replace the distributor housing assembly.

↓ OK

CHECK IGT SIGNAL FROM ECU (See page FI-62 or 79) → BAD → Check wiring between ECU, distributor and igniter, only then try another ECU.

↓ OK

TRY ANOTHER IGNITER

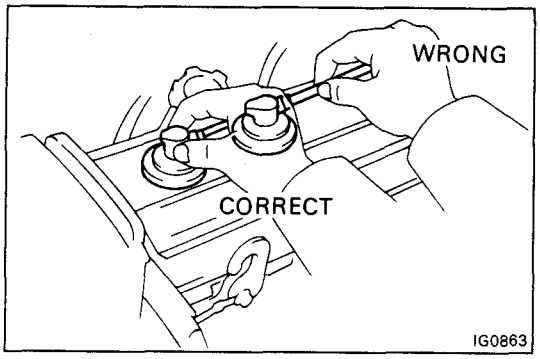

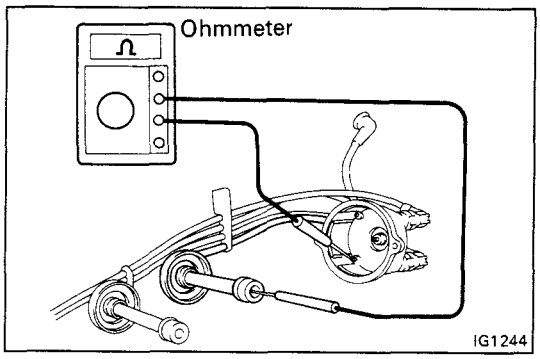

INSPECTION OF HIGH-TENSION CORDS

1. **DISCONNECT HIGH-TENSION CORDS FROM SPARK PLUGS**

   Disconnect the high-tension cords at rubber boot. DO NOT pull on the cords.

   NOTICE: Pulling on or bending the cords may damage the conductor inside.

2. **DISCONNECT HIGH-TENSION CORD FROM IGNITION COIL (See procedure step 3 on pages IG-14 and 15)**

3. **REMOVE DISTRIBUTOR CAP WITHOUT DISCONNECTING HIGH- TENSION CORDS**

4. **INSPECT HIGH-TENSION CORD RESISTANCE**

   Using an ohmmeter, measure the resistance without disconnecting the distributor cap.

   Maximum resistance: 25 kΩ per cord

   If the resistance is greater than maximum, check the terminals. If necessary, replace the high- tension cord and/ or distributor cap.

5. **REINSTALL DISTRIBUTOR CAP**

6. **RECONNECT HIGH-TENSION CORD TO IGNITION COIL (See procedure step 5 on pages IG-16 and 17)**

7. **RECONNECT HIGH-TENSION CORDS TO SPARK PLUGS**

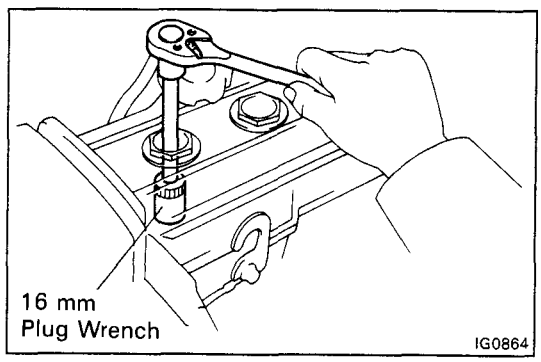

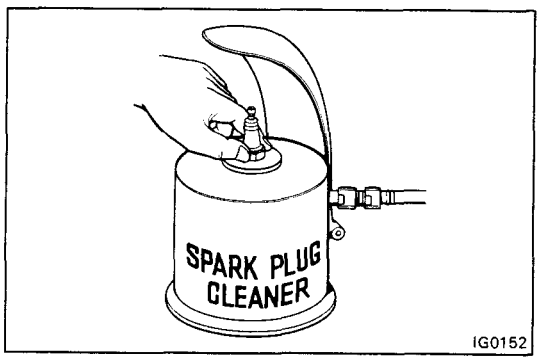

INSPECTION OF SPARK PLUGS

1. **DISCONNECT HIGH-TENSION CORDS FROM SPARK PLUGS**

2. **REMOVE SPARK PLUGS**

   Using a 16 mm plug wrench, remove the spark plug.

3. **CLEAN SPARK PLUGS**

   Using a spark plug cleaner or wire brush, clean the spark plug.

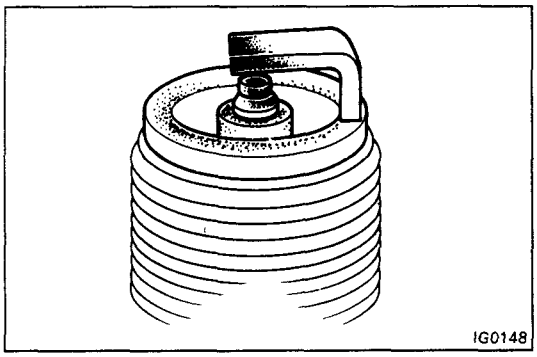

4. VISUALLY INSPECT SPARK PLUGS

Check the spark plug for electrode wear, thread damage and insulator damage.

If abnormal, replace the spark plug.

Recommended spark plug: ND K16R-U11
NGK BKR5EYA11

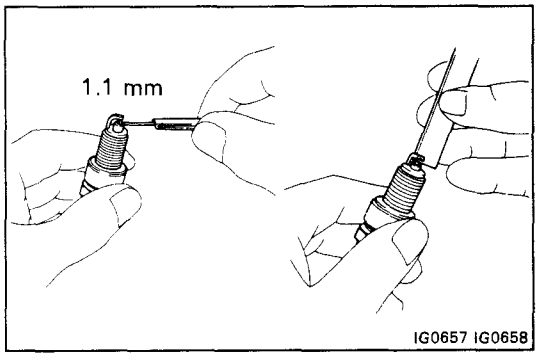

5. ADJUST ELECTRODE CAP

Carefully bent the outer electrode to obtain the correct electrode gap.

Correct electrode gap: 1.1 mm (0.43 in.)

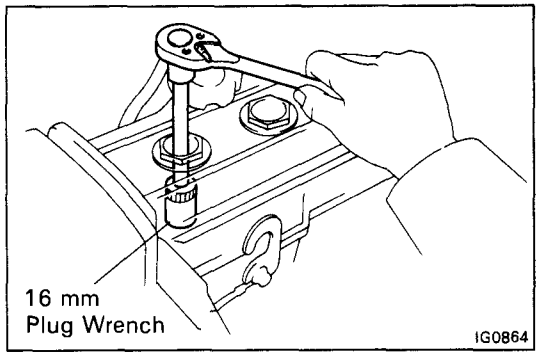

6. INSTALL SPARK PLUGS

Using a 16 mm plug wrench, install the spark plug.

Torque: 180 kg-cm (13 ft-lb, 18 N·m)

7. RECONNECT HIGH-TENSION CORDS TO SPARK PLUGS

INSPECTION OF IGNITION COIL

1. DISCONNECT IGNITION COIL CONNECTOR

2. DISCONNECT HIGH-TENSION CORD FROM IGNITION COIL (See procedure step 3 on pages IG-16 and 17)

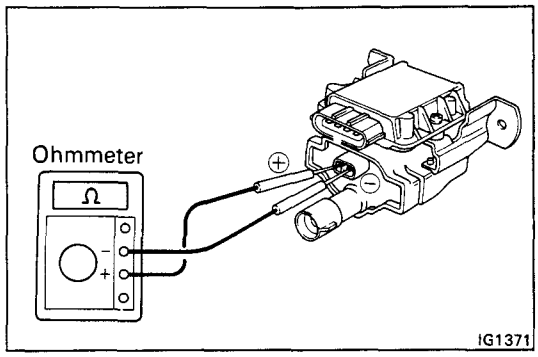

3. INSPECT PRIMARY COIL RESISTANCE

Using an ohmmeter, measure the resistance between positive (+) and negative (–) terminals.

Primary coil resistance (Cold): 0.40 – 0.50 Ω

If the resistance is not as specified, replace the ignition coil.

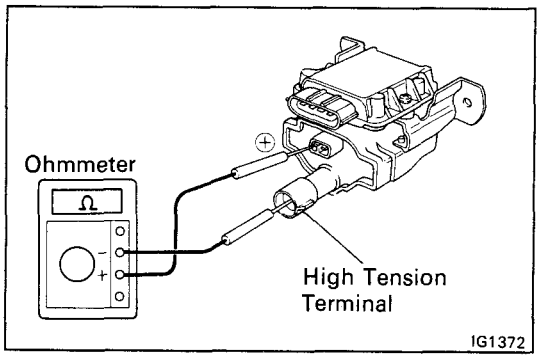

4. **INSPECT SECONDARY COIL RESISTANCE**

   Using an ohmmeter, measure the resistance between positive (+) and high-tension terminals

   Secondary coil resistance (Cold): 10.0 – 14.0 kΩ

   If the resistance is not as specified, replace the ignition coil.

5. **RECONNECT HIGH-TENSION CORD TO IGNITION COIL (See procedure step 5 on pages IG-16 and 17)**

6. **RECONNECT IGNITION COIL CONNECTOR**

INSPECTION OF DISTRIBUTOR

1. **DISCONNECT DISTRIBUTOR CONNECTOR**

2. **REMOVE DISTRIBUTOR CAP**

3. **REMOVE ROTOR**

4. **INSPECT AIR GAP**

   Using SST (G1 pickup) and a feeler gauge (NE pickup), measure the air gap between the signal rotor and pickup coil projection.

   SST 09240-00020 for G1 pickup

   Air gap: 0.2 mm – 0.4 mm (0.008 – 0.016 in.)

   If the air gap is not as specified, replace the distributor housing assembly.

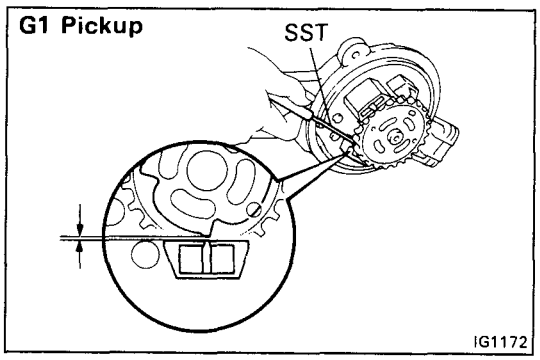

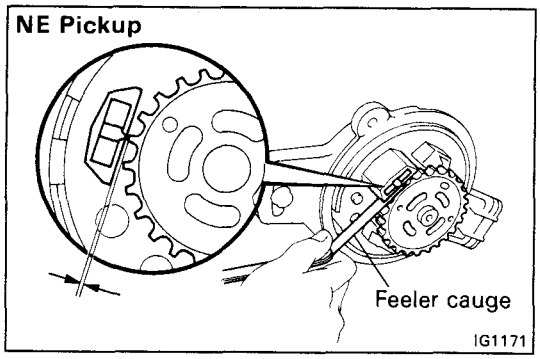

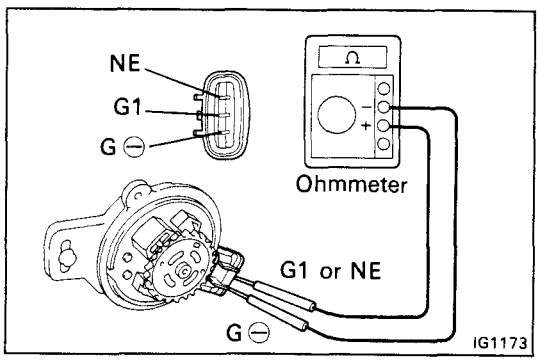

5. **INSPECT SIGNAL GENERATOR (PICKUP COIL) RESISTANCE**

   Using an ohmmeter, measure the resistance between terminals (G1 and G⊖, NE and G⊖).

   Pickup coil resistance (Cold): 170 – 210 Ω

   If the resistance is not as specified, replace the distributor housing assembly.

6. **REINSTALL ROTOR**

7. **REINSTALL DISTRIBUTOR CAP**

8. **RECONNECT DISTRIBUTOR CONNECTOR**

INSPECTION OF IGNITER

(See procedure Spark Test on page IG-10)

DISTRIBUTOR (3S-GTE)

REMOVAL OF DISTRIBUTOR

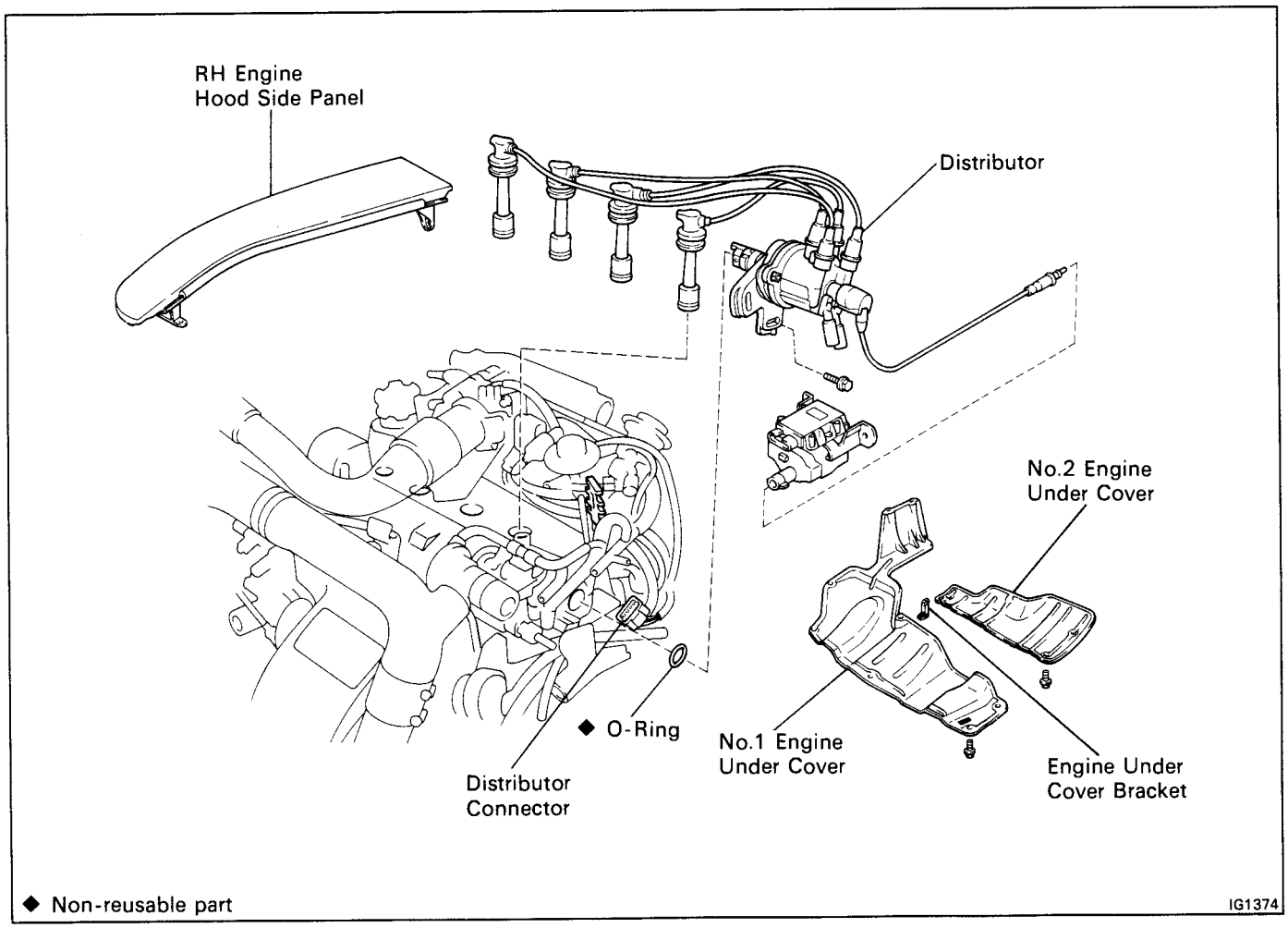

1. **DISCONNECT CABLE FROM NEGATIVE TERMINAL OF BATTERY**

   CAUTION: Work must be started after approx. 20 seconds or longer from the time the ignition switch is turned to the "LOCK" position and the negative (–) terminal cable is disconnected from the battery.

2. **DISCONNECT DISTRIBUTOR CONNECTOR**

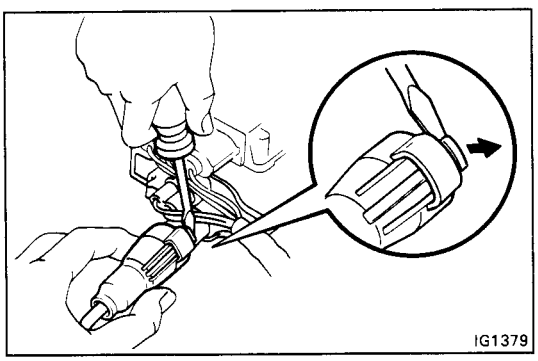

3. **DISCONNECT HIGH-TENSION CORD FROM IGNITION COIL**

   (a) Using a screwdriver, lift up the lock claw and disconnect the holder from the ignition coil.

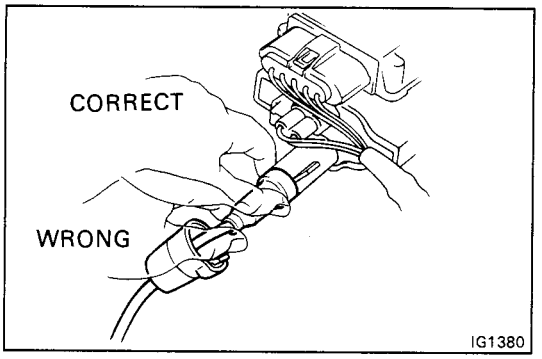

(b) Disconnect the high-tension cord at the grommet. DO NOT pull on the cord.

NOTICE: Pulling on or bending the cords may damage the conductor inside.

4. DISCONNECT HIGH-TENSION CORDS FROM SPARK PLUGS

(a) Disconnect the four high-tension cords from the cord clamp.

(b) Disconnect the four high-tension cords from the spark plugs. (See page IG-6)

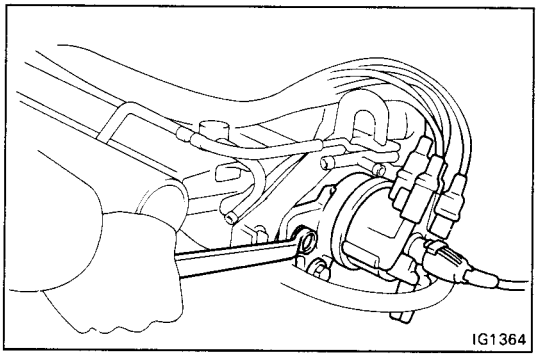

5. REMOVE DISTRIBUTOR

(a) Remove the two hold-down bolts, and pull out the distributor.

(b) Remove the O-ring from the distributor housing.

COMPONENTS

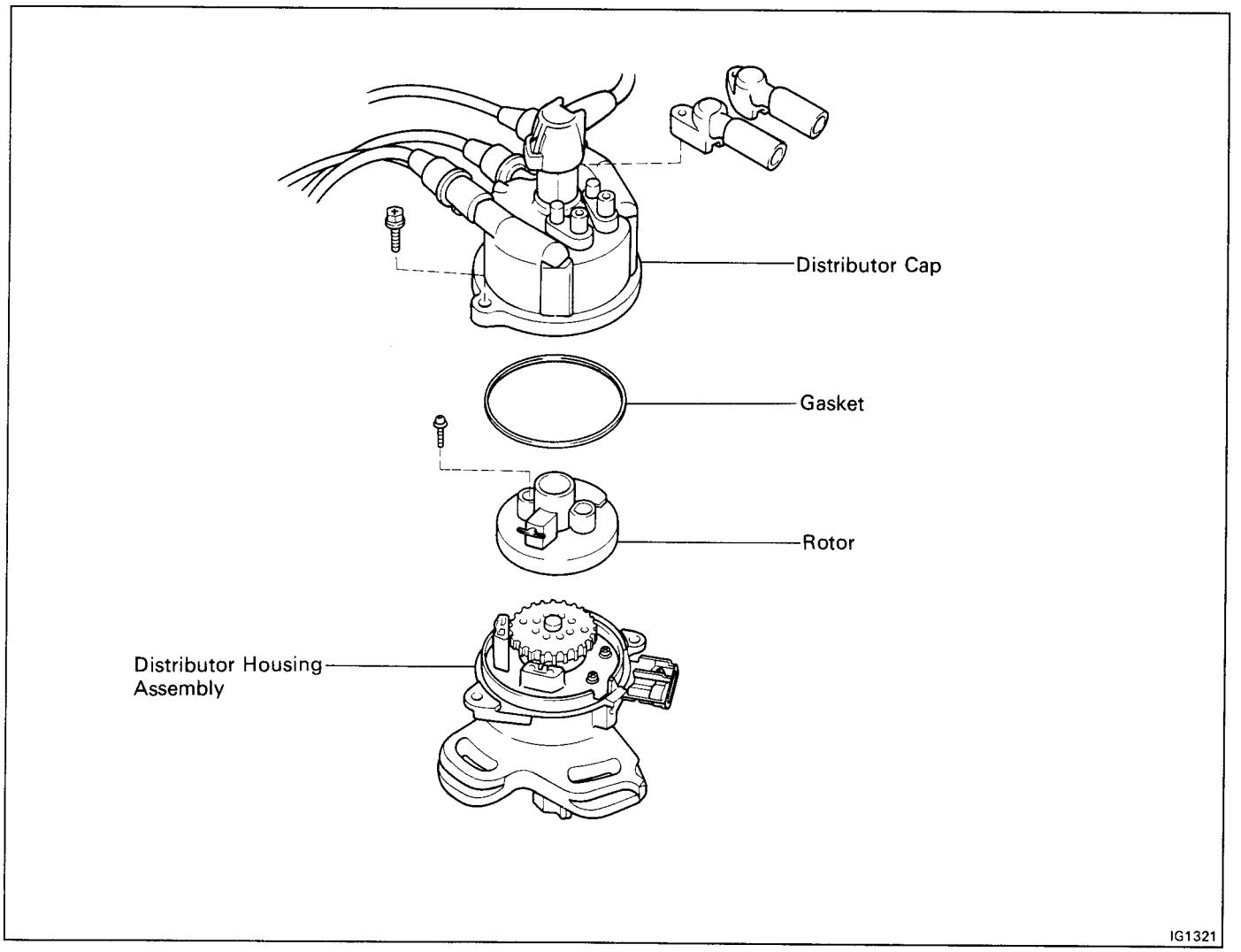

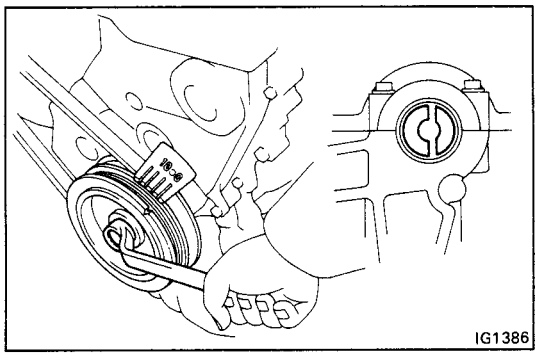

INSTALLATION OF DISTRIBUTOR

1. **REMOVE ENGINE UNDER COVERS**

2. **REMOVE RH ENGINE HOOD SIDE PANEL**

3. **SET NO.1 CYLINDER TO TDC/COMPRESSION**

   Turn the crankshaft clockwise, and position the slit of the intake camshaft as shown.

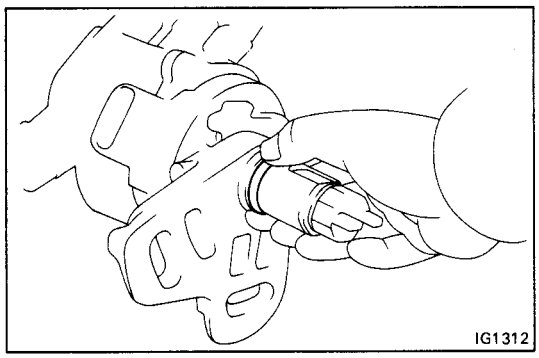

4. **INSTALL DISTRIBUTOR**

   (a) Install a new O-ring to the housing.

   (b) Apply a light coat of engine oil on the O-ring.

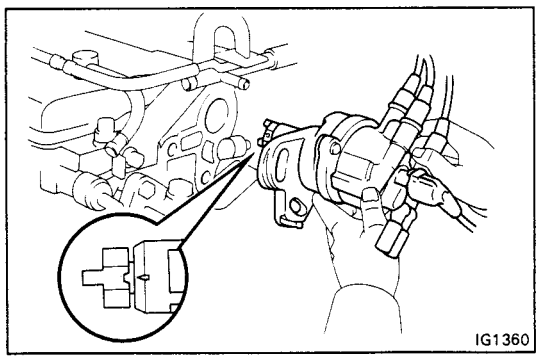

   (c) Align the cutout portion of the coupling with the groove of the housing.

   (d) Insert the distributor, aligning the center of the flange with that of the bolt hole on the cylinder head.

   (e) Lightly tighten the two hold-down bolts.

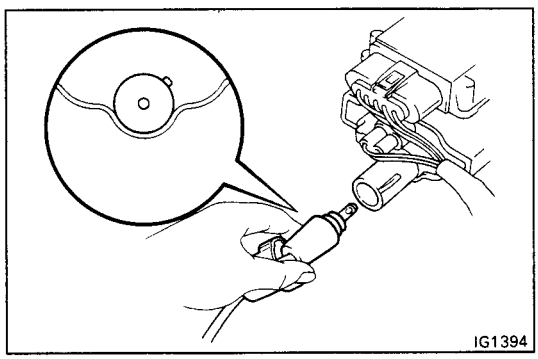

5. **CONNECT HIGH-TENSION CORD TO IGNITION COIL**

   (a) Insert the grommet portion into the terminal hole of the ignition coil.

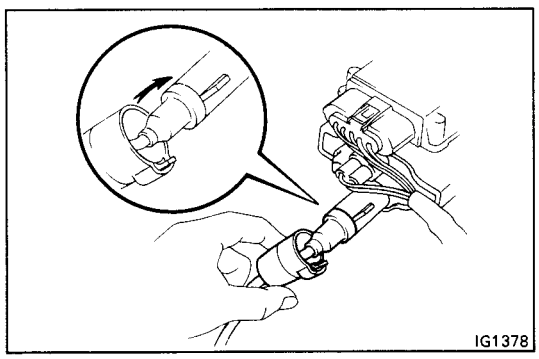

   (b) Align the spline of the ignition coil with the spline of the holder, and slide on the holder.

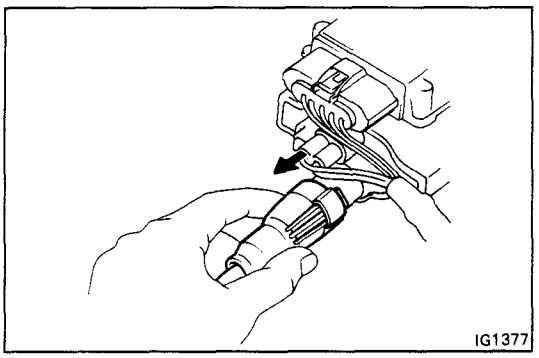

(c) Check that the lock claw of the holder is by lightly pulling the holder.

6. CONNECT HIGH-TENSION CORDS TO SPARK PLUGS

(a) Connect the four high-tension cords to the spark plugs.

Firing order: 1 – 3 – 4 – 2

(b) Install the four high-tension cords to the cord clamp.

7. CONNECT DISTRIBUTOR CONNECTOR

8. CONNECT CABLE TO NEGATIVE TERMINAL OF BATTERY

9. WARM UP ENGINE

Allow the engine to warm up to normal operating temperature.

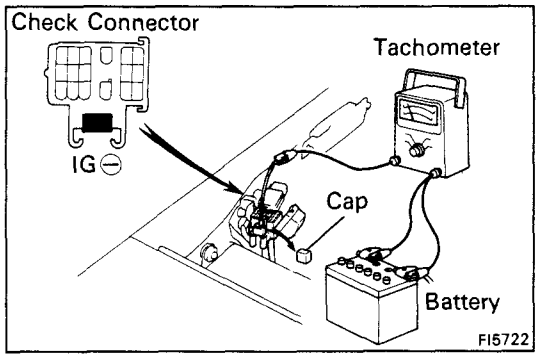

10. CONNECT TACHOMETER

Connect the test probe of a tachometer to terminal IG⊖ of the check connector.

NOTICE:

- **NEVER allow the tachometer terminal to touch ground as it could result in damage to the igniter and/or ignition coil.**
- **As some tachometers are not compatible with this ignition system, we recommend that you confirm the compatibility of yours before use.**

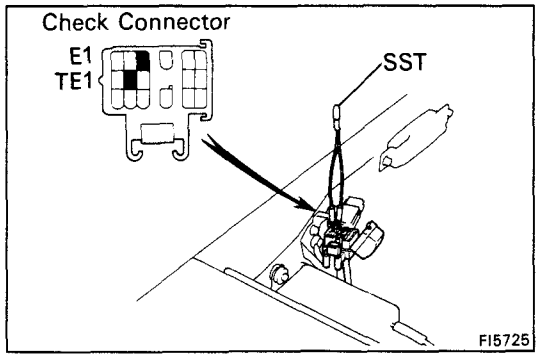

11. ADJUST IGNITION TIMING

(a) Using SST, connect terminals TE1 and E1 of the check connector.

SST 09843-18020

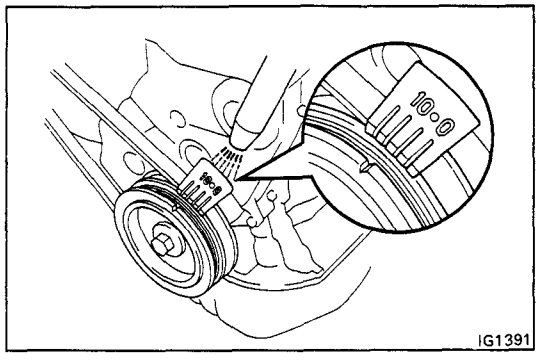

(b) Using a timing light, check the ignition timing.

Ignition timing: 10° BTDC @ idle (Transmission in neutral range)

(c) Loosen the two hold-down bolts, and adjust by turning the distributor.

(d) Tighten the two hold-down bolts, and recheck the ignition timing.

Torque: 400 kg-cm (29 ft-lb, 39 N·m)

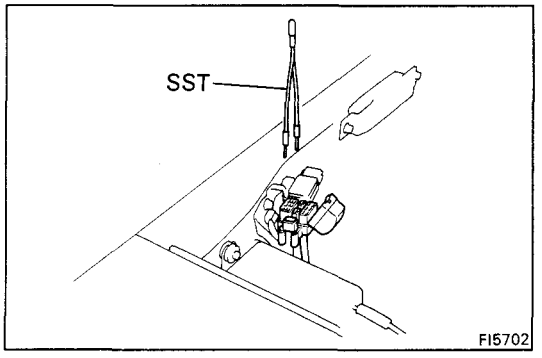

(e) Remove the SST.
SST 09843-18020

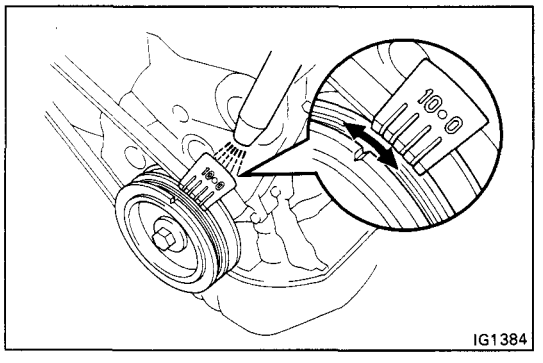

12. FURTHER CHECK IGNITION TIMING

Ignition timing: 12 – 21° BTDC @ idle
(Transmission in neutral range)

HINT: The timing mark moves in a range between 12° and 21°.

13. DISCONNECT TACHOMETER AND TIMING LIGHT FROM ENGINE

14. REINSTALL RH ENGINE HOOD SIDE PANEL

15. REINSTALL ENGINE UNDER COVERS

DISTRIBUTOR (5S-FE)

REMOVAL OF DISTRIBUTOR

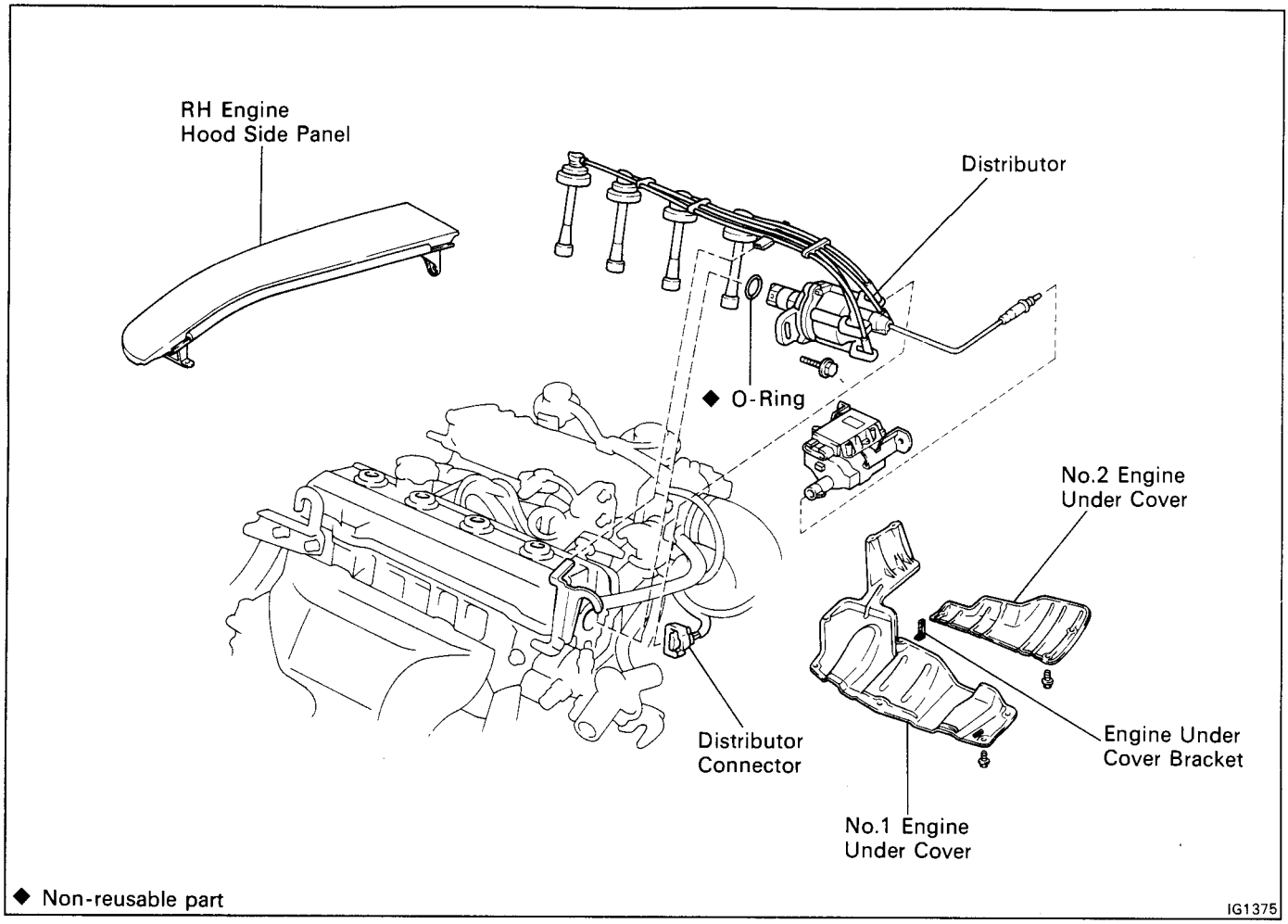

1. **DISCONNECT CABLE FROM NEGATIVE TERMINAL OF BATTERY**

   CAUTION: Work must be started after approx. 20 seconds or longer from the time the ignition switch is turned to the "LOCK" position and the negative (–) terminal cable is disconnected from the battery.

2. **DISCONNECT DISTRIBUTOR CONNECTOR**

3. **DISCONNECT HIGH-TENSION CORD FROM IGNITION COIL (See procedure step 3 on pages IG-14 and 15)**

4. **DISCONNECT HIGH-TENSION CORDS FROM SPARK PLUGS**

   (a) Disconnect the cord clamp from the engine hanger.

   (b) Disconnect the four high-tension cords from the spark plugs. (See page IG-11)

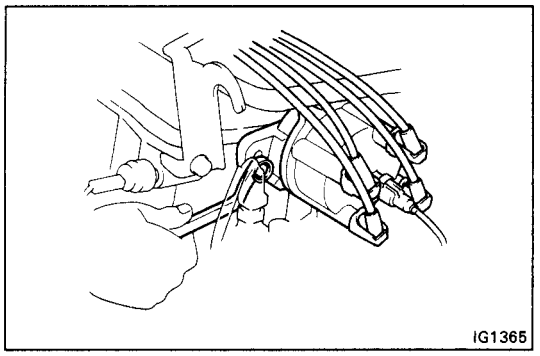

5. **REMOVE DISTRIBUTOR**
   (a) Remove the hold-down bolt and pull out the distributor.
   (b) Remove the O-ring from the distributor housing.

COMPONENTS

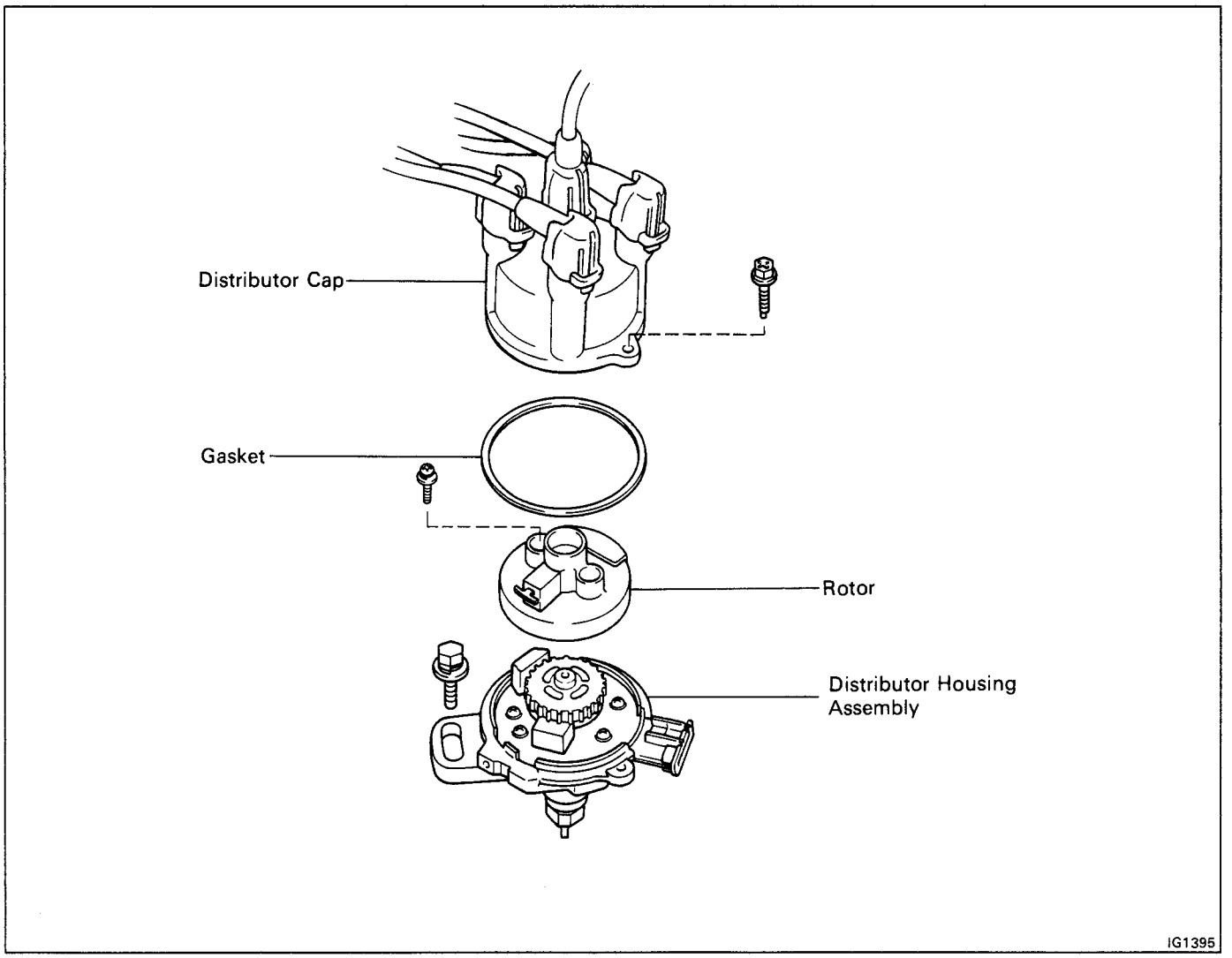

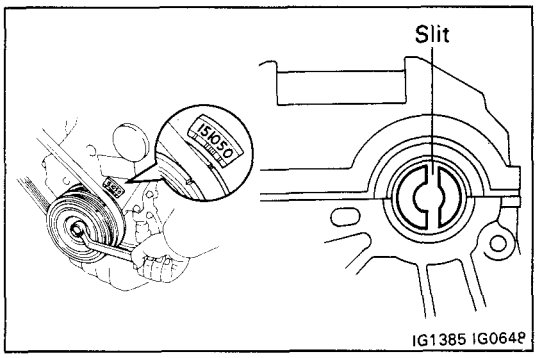

INSTALLATION OF DISTRIBUTOR

1. **REMOVE ENGINE UNDER COVERS**

2. **REMOVE RH ENGINE HOOD SIDE PANEL**

3. **SET NO.1 CYLINDER TO TDC/COMPRESSION**

   Turn the crankshaft clockwise, and position the slit of the intake camshaft as shown.

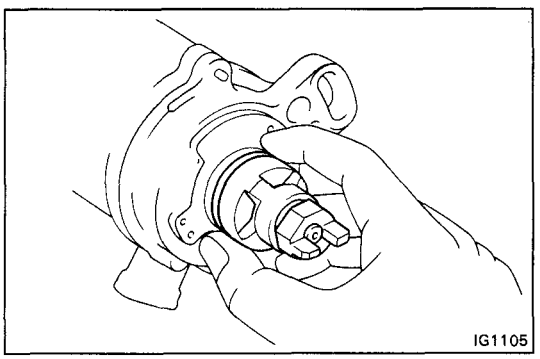

4. **INSTALL DISTRIBUTOR**

   (a) Install a new O-ring to the housing.

   (b) Apply a light coat of engine oil on the O-ring.

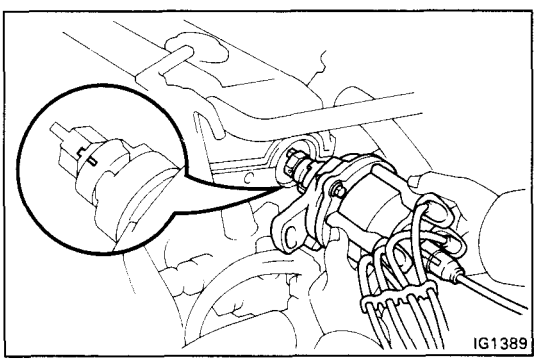

   (c) Align the cutout portion of the coupling with the groove of the housing.

   (d) Insert the distributor, aligning the center of the flange with that of the bolt hole on the cylinder head.

   (e) Lightly tighten the hold-down bolt.

   (f) Install the high-tension cord clamp to the rear engine hanger.

5. **CONNECT HIGH-TENSION CORD TO IGNITION COIL (See procedure step 5 on pages IG-16 and 17)**

6. **CONNECT HIGH-TENSION CORDS TO SPARK PLUGS**

   Firing order: 1 – 3 – 4 – 2

7. **CONNECT DISTRIBUTOR CONNECTOR**

8. **CONNECT CABLE TO NEGATIVE TERMINAL OF BATTERY**

9. **WARM UP ENGINE**

   Allow the engine to warm up to normal operating temperature.

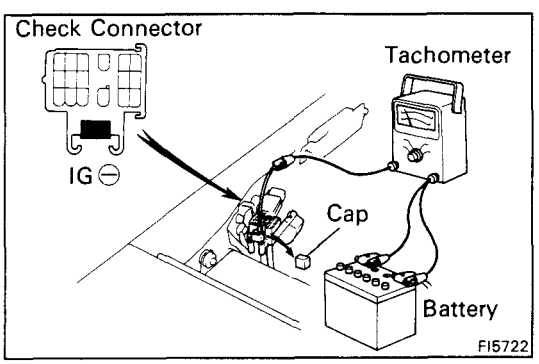

10. **CONNECT TACHOMETER**

    Connect the test probe of a tachometer to terminal IG⊖ of the check connector.

    NOTICE:

    - **NEVER allow the tachometer terminal to touch ground as it could result in damage to the igniter and/or ignition coil.**
    - **As some tachometers are not compatible with this ignition system, we recommend that you confirm the compatibility of yours before use.**

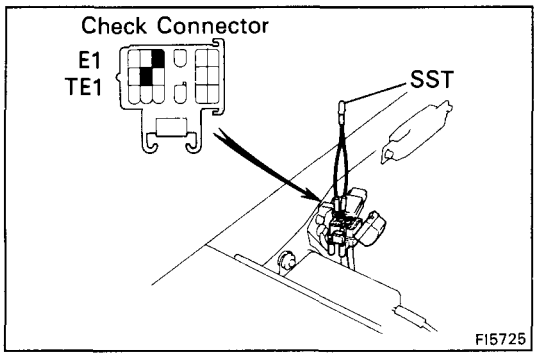

11. ADJUST IGNITION TIMING

(a) Using SST, connect terminals TE1 and E1 of the check connector.

SST 09843-18020

HINT: After engine rpm are kept at 1,000 – 1,300 rpm for 5 seconds, check that they return to idle speed.

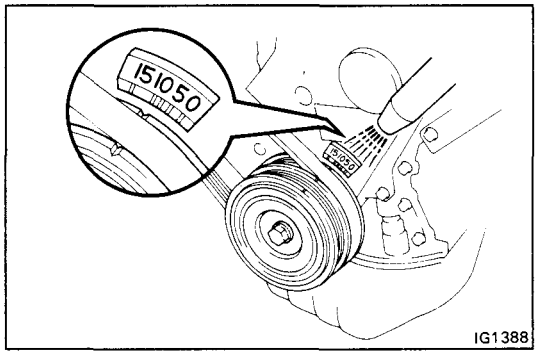

(b) Using a timing light, check the ignition timing.

Ignition timing: 10° BTDC @ idle (Transmission in neutral range)

(c) Loosen the hold-down bolt, and adjust by turning the distributor.

(d) Tighten the hold-down bolt, and recheck the ignition timing.

Torque: 130 kg-cm (9 ft-lb, 13 N·m)

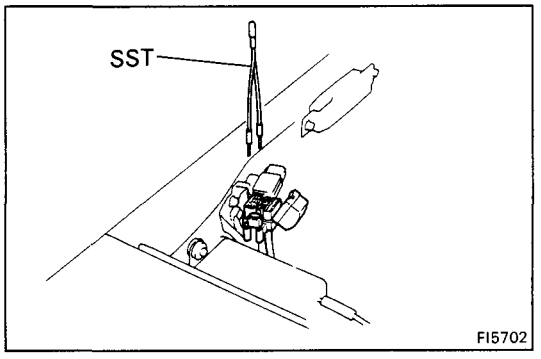

(e) Remove the SST.

SST 09843-18020

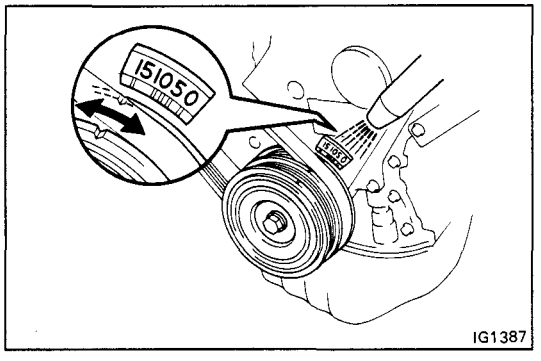

12. FURTHER CHECK IGNITION TIMING

Ignition timing: 13 – 22° BTDC @ idle (Transmission in neutral range)

HINT: The timing mark moves in a range between 13° and 22°.

13. DISCONNECT TACHOMETER AND TIMING LIGHT FROM ENGINE

14. REINSTALL RH ENGINE HOOD SIDE PANEL

15. REINSTALL ENGINE UNDER COVERS

STARTING SYSTEM

	Page
TROUBLESHOOTING	ST-2
STARTER	ST-3
STARTER RELAY	ST-18
CLUTCH STARTER SWITCH (M/T only)	ST-18

TROUBLESHOOTING

Problem	Possible cause	Remedy	Page
Engine will not crank	Battery charge low	Check battery specific gravity Check or replace battery	CH-3
	Battery cables loose, corroded or worn	Repair or replace cables	
	Clutch start switch faulty (M/T)	Adjust or replace clutch start switch	CL-5
	Neutral start switch faulty (A/T)	Adjust or repair switch	
	Starter relay faulty (M/T)	Replace starter relay	
	Fusible link blown	Replace fusible link	
	Starter faulty	Repair starter	ST-6
	Ignition switch faulty	Replace ignition switch	
Engine cranks slowly	Battery charge low	Check battery specific gravity Charge or replace battery	CH-3
	Battery cables loose, corroded or worn	Repair or replace cables	
	Starter faulty	Repair starter	ST-6
Starter keeps running	Starter faulty	Repair starter	ST-6
	Ignition switch faulty	Replace ignition switch	
	Short in wiring	Repair wiring	
Starter spins-engine will not crank	Pinion gear teeth broken or starter faulty	Repair starter	ST-6
	Flywheel teeth broken	Replace flywheel	

STARTER

REMOVAL OF STARTER

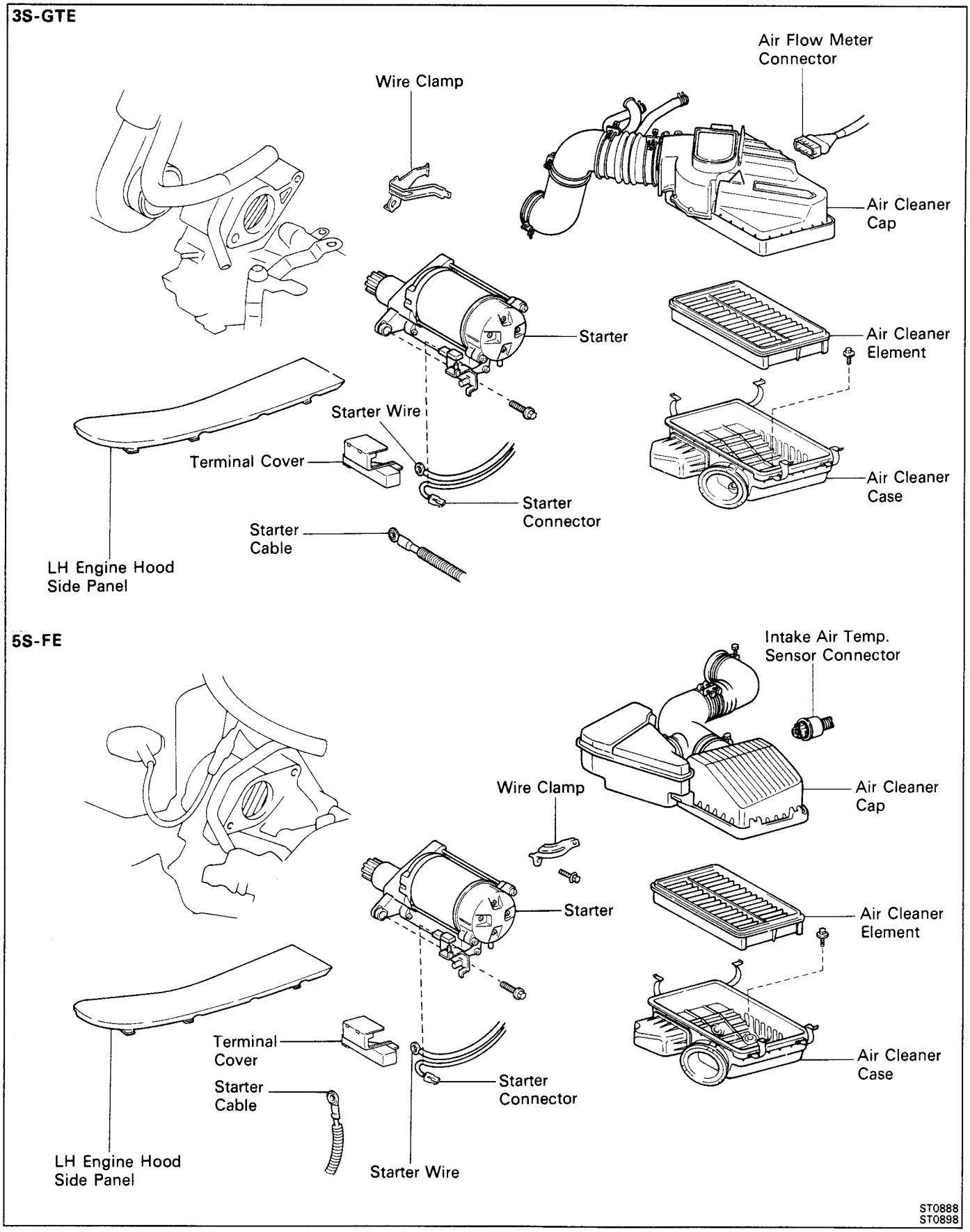

1. **DISCONNECT CABLE FROM NEGATIVE TERMINAL OF BATTERY**

   CAUTION: Work must be started after approx. 20 seconds or longer from the time the ignition switch is turned to the "LOCK" position and the negative (–) terminal cable is disconnected from the battery.

2. **REMOVE LH ENGINE HOOD SIDE PANEL**

3. **REMOVE AIR CLEANER**
   3S-GTE (See step 9 on page EM-134)
   5S-FE (See step 9 on page EM-182)

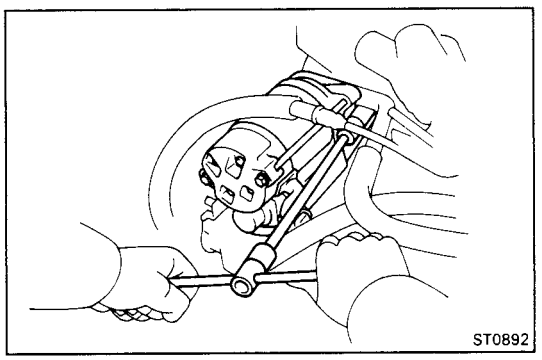

4. **REMOVE STARTER**
   (a) Remove the terminal cover.
   (b) Remove the nut, and disconnect the starter cable.
   (c) Remove the nut, and disconnect the starter wire.
   (d) Disconnect the starter connector.
   (e) Remove the two bolts, wire clamp and starter.

COMPONENTS

1.0 kW Type

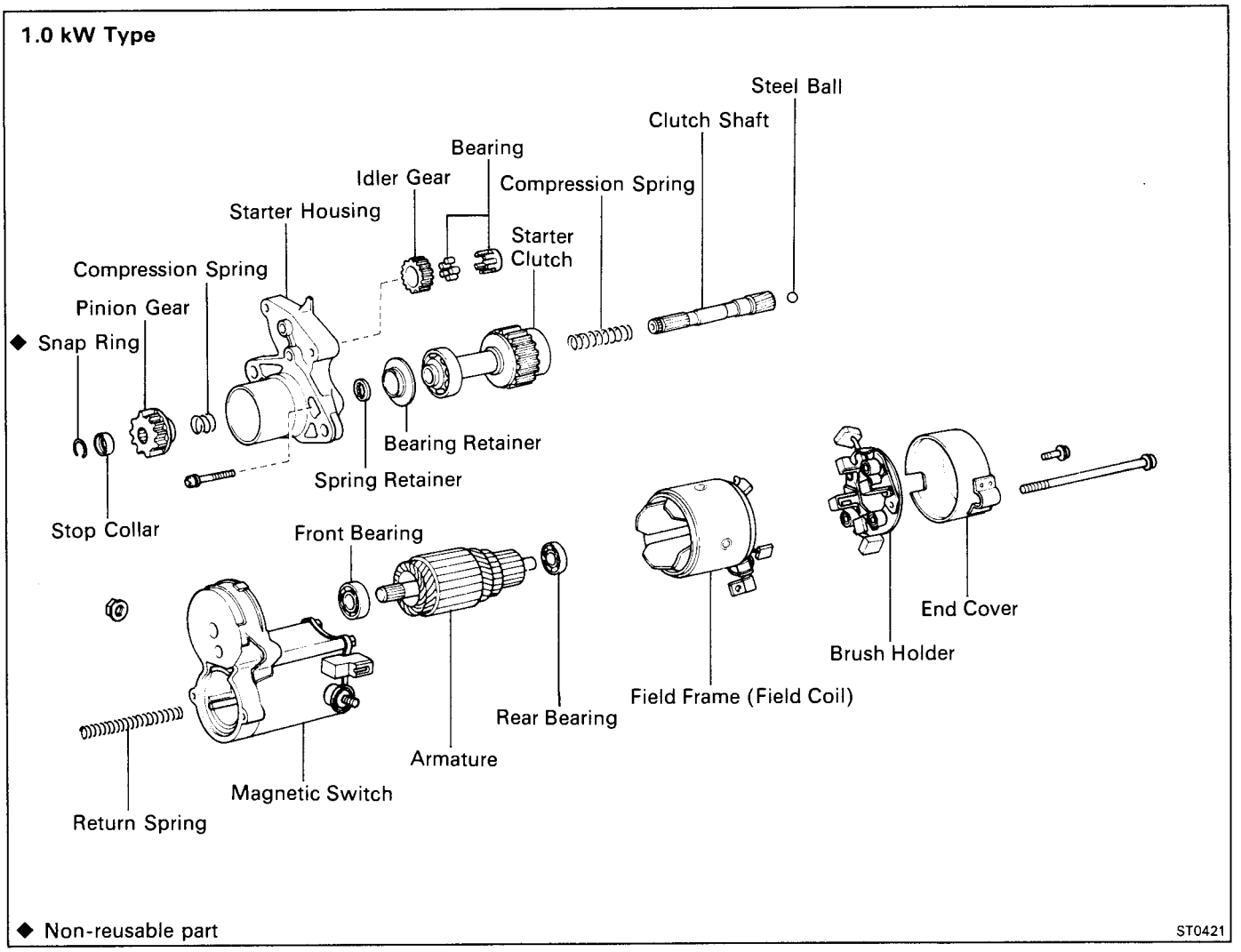

COMPONENTS (Cont'd)

1.4 kW (Conventional) and 1.6 kW Types

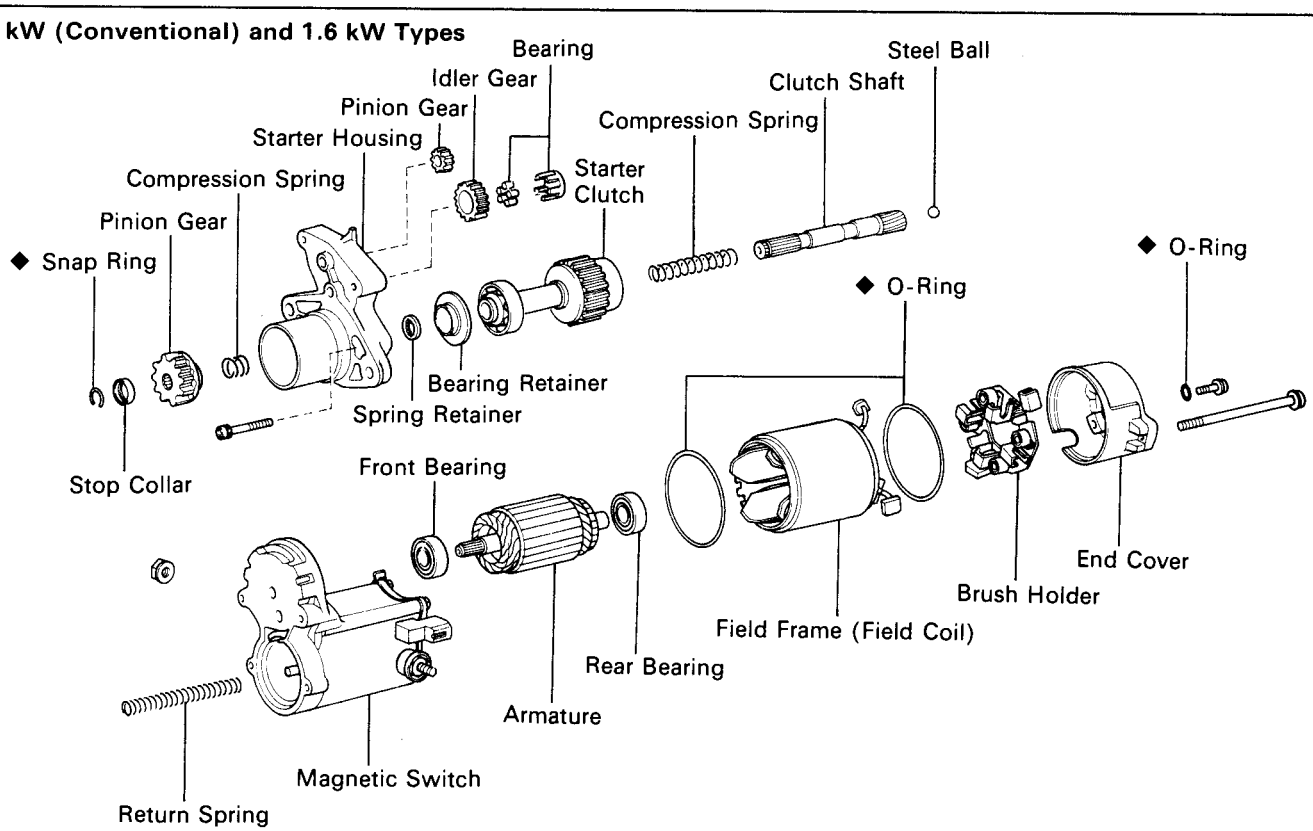

1.4 kW (Compact) Type

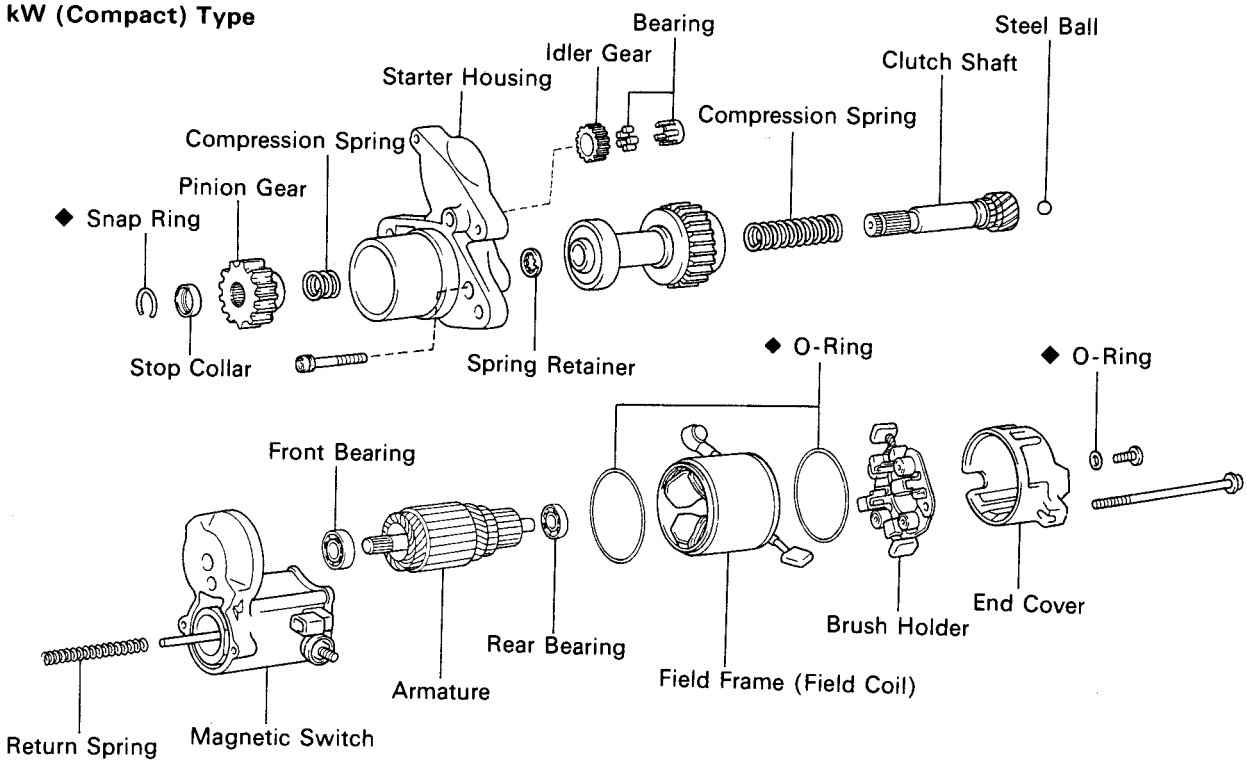

◆ Non-reusable part

ST0422
ST0850

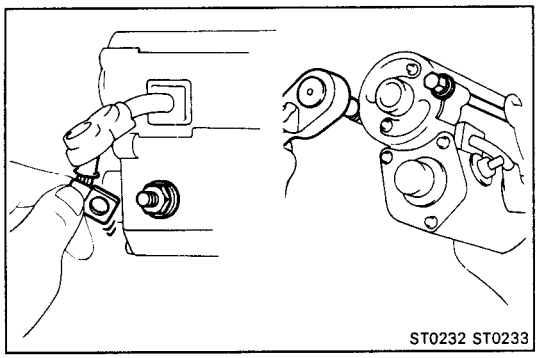

DISASSEMBLY OF STARTER

(See page ST-4 or 5)

1. REMOVE FIELD FRAME AND ARMATURE

(a) Remove the nut, and disconnect the lead wire from the magnetic switch terminal.

(b) Remove the two through bolts, and pull out the field frame together with the armature.

(c) (1.4 kW and 1.6 kW Types)
Remove the O-ring from the field frame.

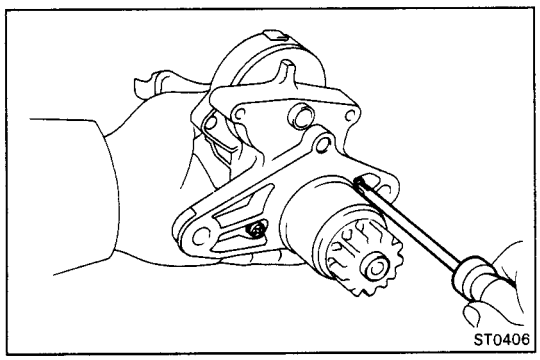

2. REMOVE STARTER HOUSING, CLUTCH ASSEMBLY AND GEAR(S)

(a) Remove the two screws.

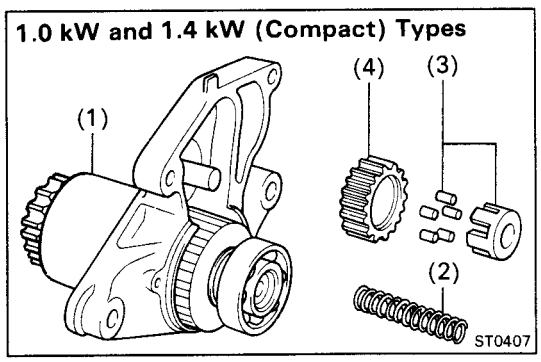

(b) Remove the following parts from the magnetic switch:

(1.0 kW and 1.4 kW (Compact) Types)

(1) Starter housing and clutch assembly
(2) Return spring
(3) Bearing
(4) Idler gear

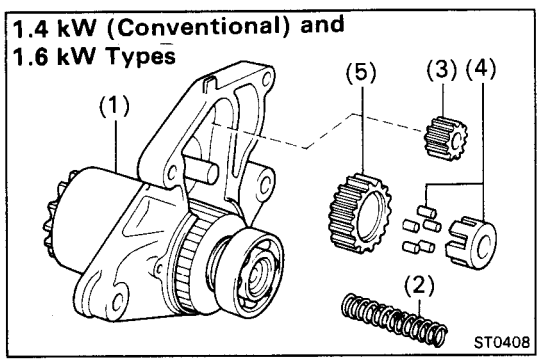

(1.4 kW (Conventional) and 1.6 kW Types)

(1) Starter housing and clutch assembly
(2) Return spring
(3) Pinion gear
(4) Bearing
(5) Idler gear

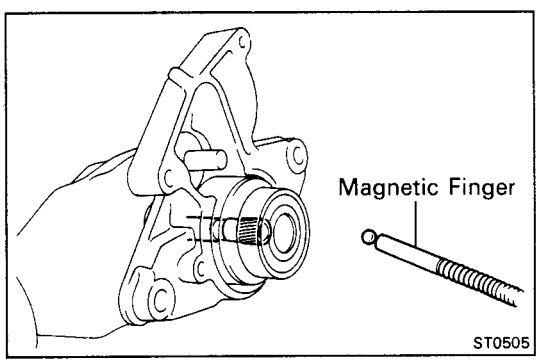

3. REMOVE STEEL BALL

Using a magnetic finger, remove the steel ball from the clutch shaft hole.

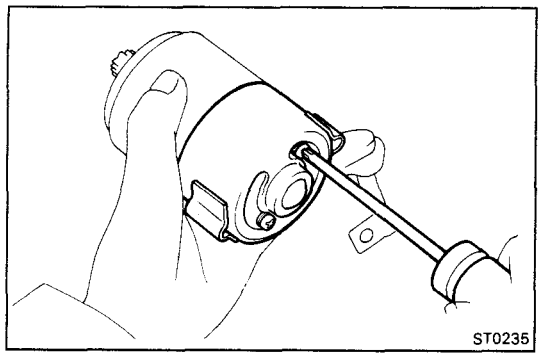

4. **REMOVE BRUSH HOLDER**
   (a) Remove the two screws, two O-rings (1.4 kW and 1.6 kW types) and end cover from the field frame.
   (b) (1.4 kW and 1.6 kW Types)
   Remove the O-ring from the field frame.

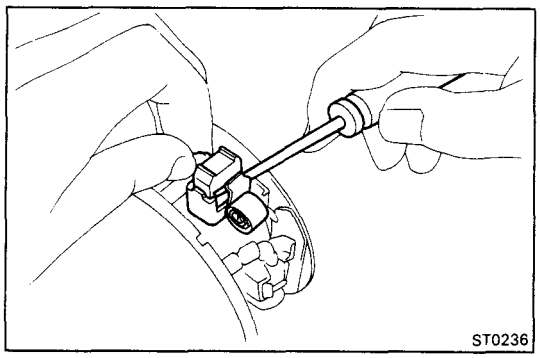

   (c) Using a screwdriver, hold the spring back and disconnect the brush from the brush holder. Disconnect the four brushes, and remove the brush holder.

5. **REMOVE ARMATURE FROM FIELD FRAME**

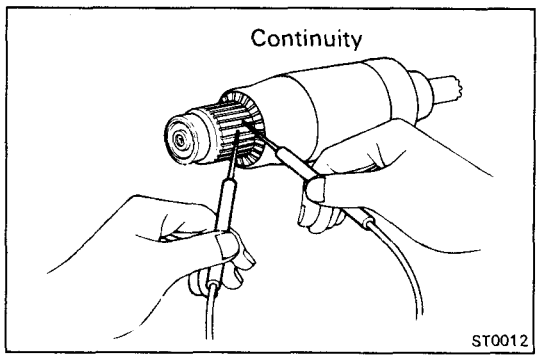

INSPECTION AND REPAIR OF STARTER

Armature Coil

1. **INSPECT COMMUTATOR FOR OPEN CIRCUIT**
   Using an ohmmeter, check that there is continuity between the segments of the commutator.
   If there is no continuity, replace the armature.

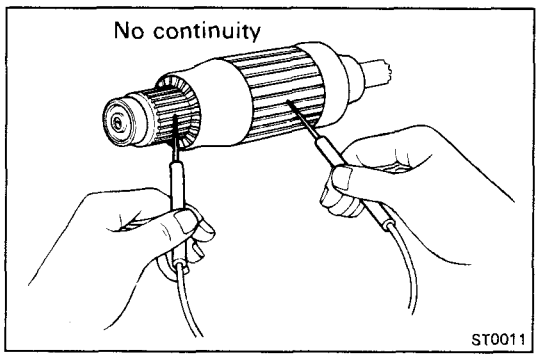

2. **INSPECT COMMUTATOR FOR GROUND**
   Using an ohmmeter, check that there is no continuity between the commutator and armature coil core.
   If there is continuity, replace the armature.

Commutator

1. **INSPECT COMMUTATOR FOR DIRTY AND BURNT SURFACE**
   If the surface is dirty or burnt, correct with sandpaper (No.400) or on a lathe.

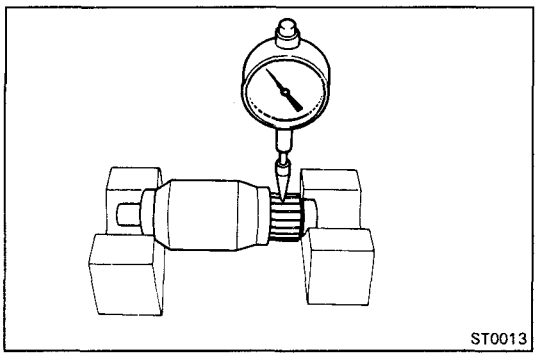

2. INSPECT COMMUTATOR FOR RUNOUT

(a) Place the commutator on V-blocks.

(b) Using a dial indicator, measure the circle runout.

Maximum circle runout: 0.05 mm (0.0020 in.)

If the circle runout is greater than maximum, correct it on a lathe.

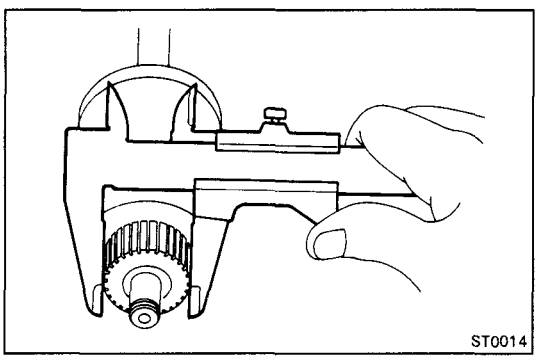

3. INSPECT COMMUTATOR DIAMETER

Using vernier calipers, measure the diameter.

Standard diameter: 30.0 mm (1.181 in.)

Minimum diameter: 29.0 mm (1.142 in.)

If the diameter is less than minimum, replace the armature.

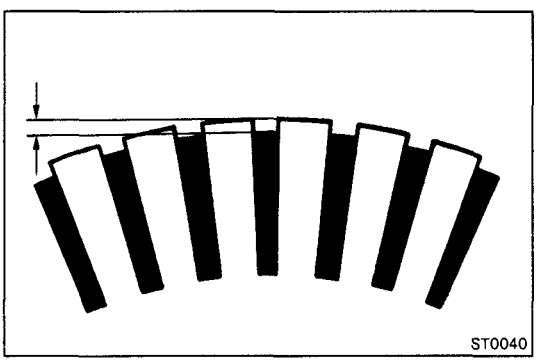

4. INSPECT UNDERCUT DEPTH

Check that the undercut depth is clean and free of foreign material. Smooth out the edge.

Standard undercut depth: 0.6 mm (0.024 in.)

Minimum undercut depth: 0.2 mm (0.008 in.)

If the undercut depth is less than minimum, correct it with a hacksaw blade.

Field Coil (Field Frame)

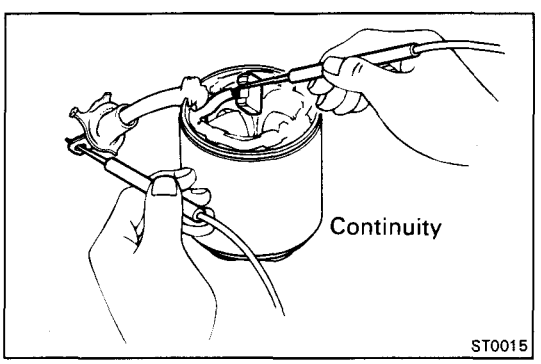

1. INSPECT FIELD COIL FOR OPEN CIRCUIT

Using an ohmmeter, check that there is continuity between the lead wire and field coil brush lead.

If there is no continuity, replace the field frame.

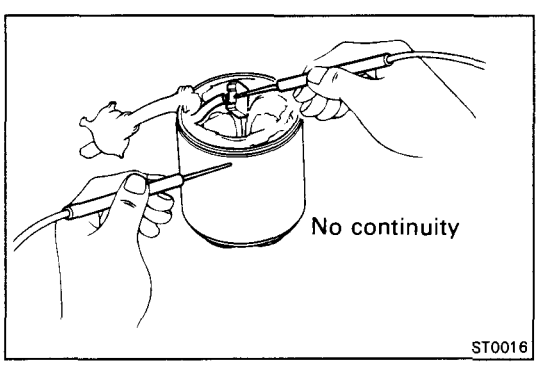

2. INSPECT FIELD COIL FOR GROUND

Using an ohmmeter, check that there is no continuity between the field coil end and field frame.

If there is continuity, replace the field frame.

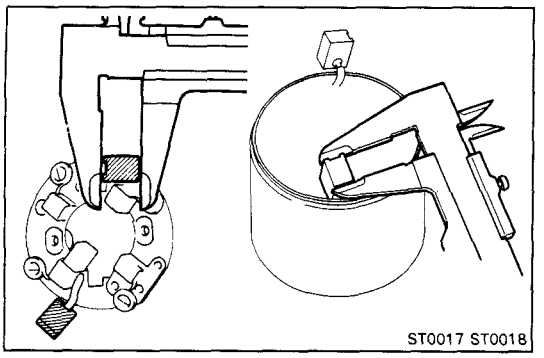

Brushes

INSPECT BRUSH LENGTH

Using vernier calipers, measure the brush length.

Standard length:

1.0 kW type	**13.5 mm (0.531 in.)**
1.4 kW and 1.6 kW types	**15.5 mm (0.610 in.)**

Minimum length:

1.0 kW type	**8.5 mm (0.335 in.)**
1.4 kW and 1.6 kW types	**10.0 mm (0.394 in.)**

If the length is less than minimum, replace the brush holder and field frame.

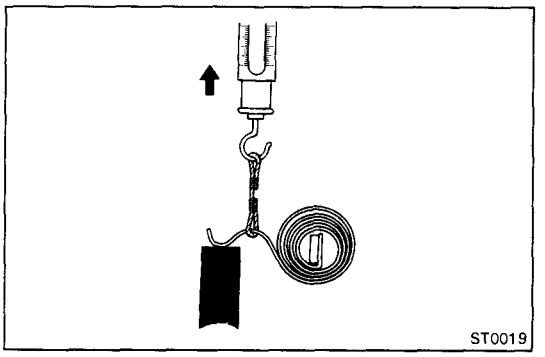

Brush Springs

INSPECT BRUSH SPRING LOAD

Take the pull scale reading the instant the brush spring separates from the brush.

Standard installed load:

1.79 – 2.41 kg (3.9 – 5.3 lb, 18 – 24 N)

If the installed load is not as specified, replace the brush springs.

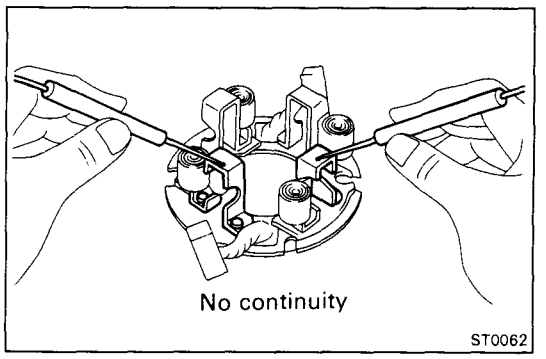

Brush Holder

INSPECT BRUSH HOLDER INSULATION

Using an ohmmeter, check that there is no continuity between the positive (+) and negative (–) brush holders.

If there is continuity, repair or replace the brush holder.

Clutch and Gears

1. **INSPECT GEAR TEETH**

Check the gear teeth on the pinion gear, idler gear and the clutch assembly for wear or damage.

If damaged, replace the gear or clutch assembly.

If damaged, also check the flywheel ring gear for wear or damage.

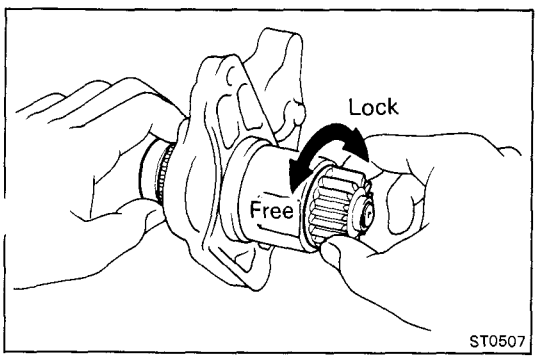

2. **INSPECT CLUTCH PINION GEAR**

Rotate the pinion gear counterclockwise and check that it turns freely. Try to rotate the pinion gear clockwise and check that it locks.

If necessary, replace the clutch assembly.

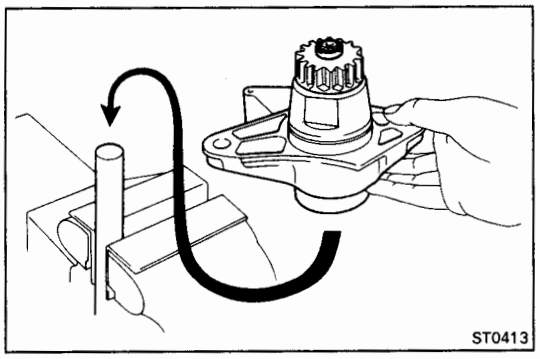

3. IF NECESSARY, REPLACE CLUTCH ASSEMBLY

A. Disassemble starter housing and clutch assembly

(a) Mount a brass bar in a vise, and install the starter housing and clutch assembly to the brass bar.

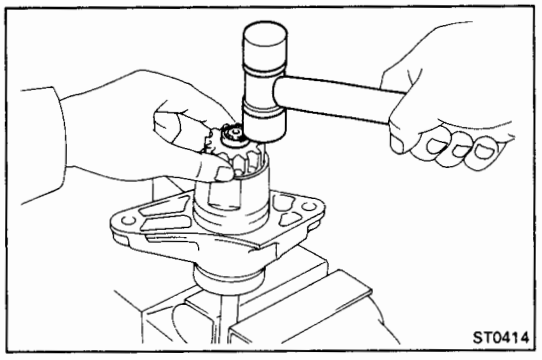

(b) Push down the pinion gear.

(c) Using a plastic-faced hammer, tap down the stop collar.

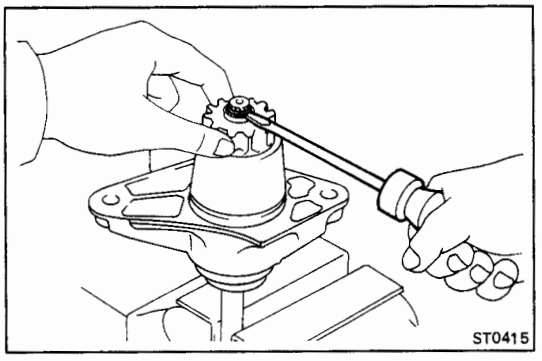

(d) Using a screwdriver, pry out the snap ring.

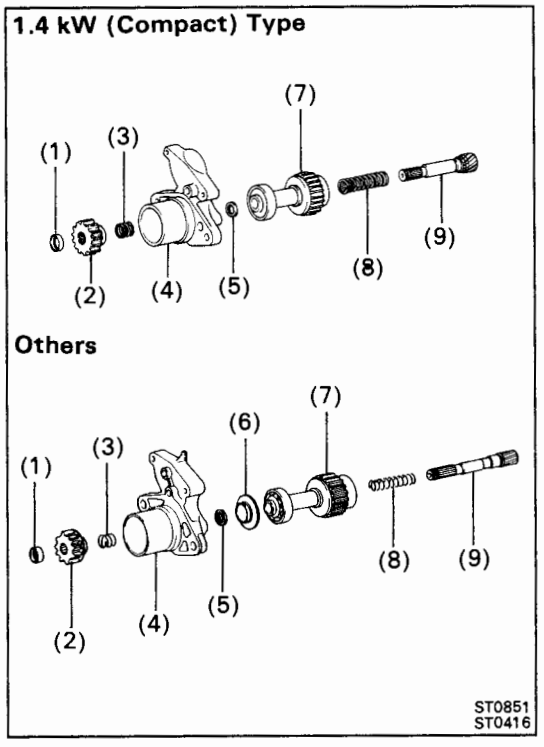

(e) Disassembly the following parts:

(1) Stop collar
(2) Pinion gear
(3) Compression spring
(4) Starter housing
(5) Spring retainer
(6) (Ex. 1.4 kW (Compact) Type) Bearing retainer
(7) Starter clutch
(8) Compression spring
(9) Clutch shaft

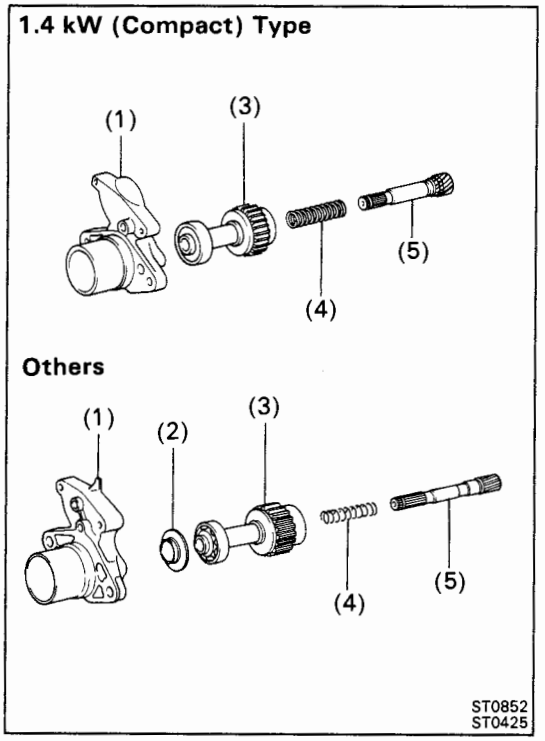

B. Assemble starter housing and clutch assembly

(a) Assemble the following part:

(1) Starter housing

(2) (Ex. 1.4 kW (Compact) Type) Bearing retainer

(3) Starter clutch

(4) Compression spring

(5) Clutch shaft

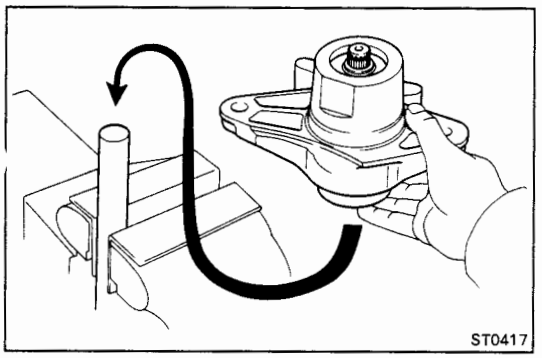

(b) Mount a brass bar in a vise, install the starter housing and clutch assembly to the brass bar.

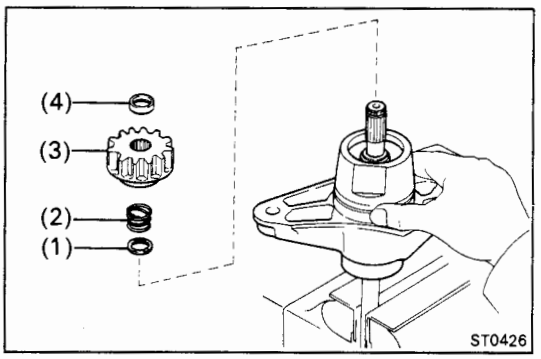

(c) Push down the starter housing, and install the following parts:

(1) Spring retainer

(2) Compression spring

(3) Pinion gear

(4) Stop collar

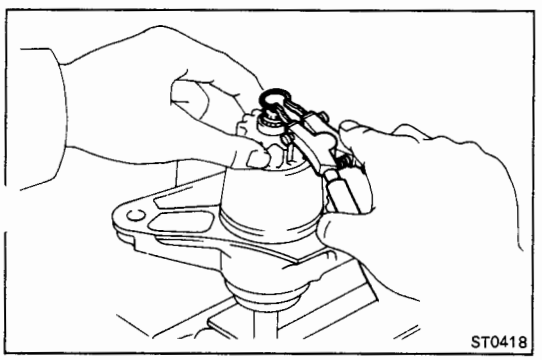

(d) Push down the pinion gear.

(e) Using snap ring pliers, install a new snap ring.

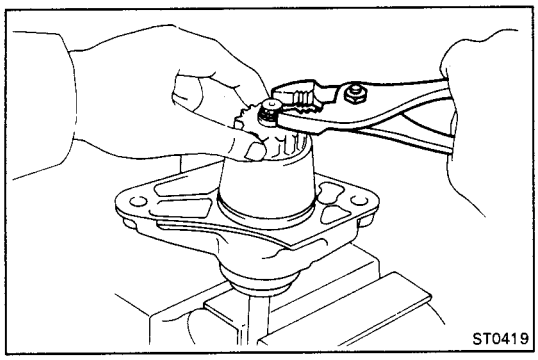

(f) Using pliers, compress the snap ring.

(g) Check that the snap ring fits correctly.

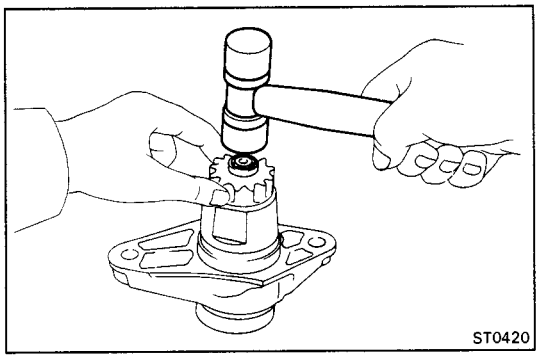

(h) Remove the starter housing and clutch assembly from the brass bar.

(i) Using a plastic-faced hammer, tap the clutch shaft and install the stop collar onto the snap ring.

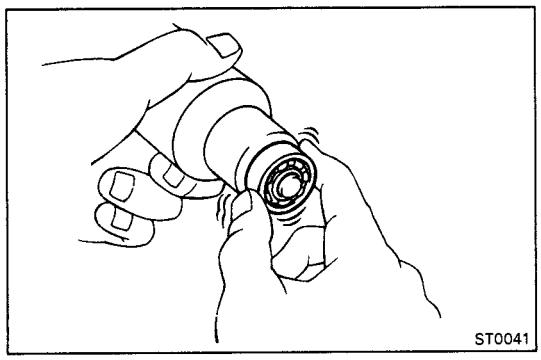

Bearings

1. INSPECT BEARINGS

Turn each bearing by hand while applying inward force.

If resistance is felt or if the bearing sticks, replace the bearing.

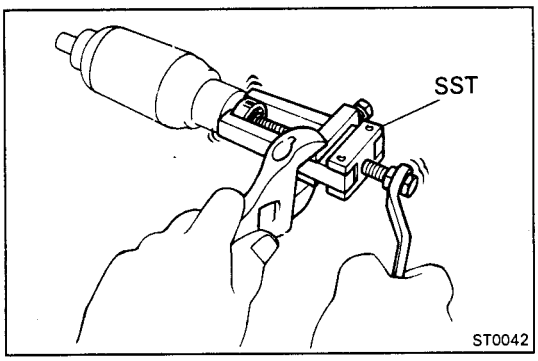

2. IF NECESSARY, REPLACE BEARINGS

(a) Using SST, remove the bearing.

SST 09286-46011

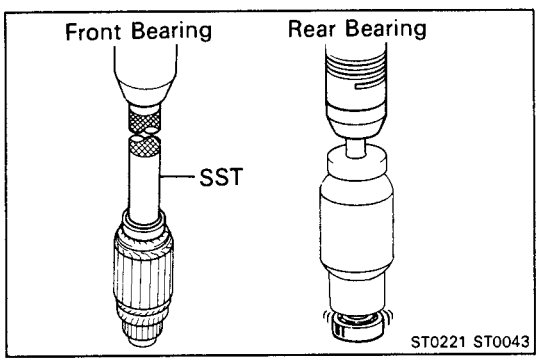

(b) Using SST and a press, press in a new front bearing.

SST 09201-41020 for1.4 kW (conventional) and 1.6 kW types
09285-76010 for1.0 kW type
09820-00030 for1.4 kW (compact) type

(c) Using a press, press in a new rear bearing.

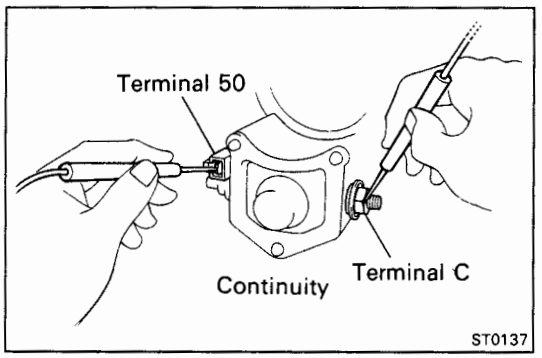

Magnetic Switch

1. PERFORM PULL-IN COIL OPEN CIRCUIT TEST

Using an ohmmeter, check that there is continuity between terminals 50 and C.

If there is no continuity, replace the magnetic switch.

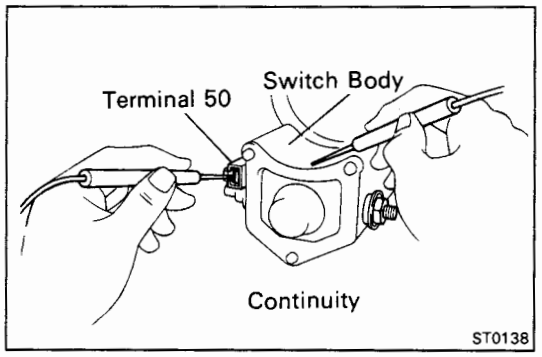

2. PERFORM HOLD-IN COIL OPEN CIRCUIT TEST

Using an ohmmeter, check that there is continuity between terminal 50 and the switch body.

If there is no continuity, replace the magnetic switch.

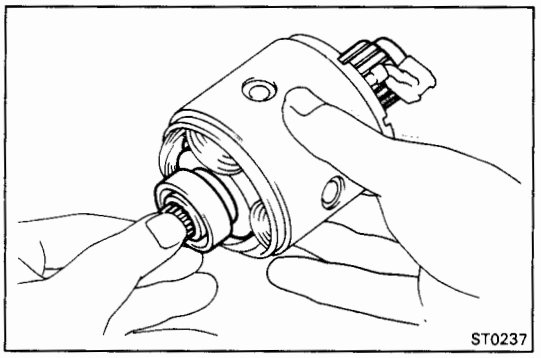

ASSEMBLY OF STARTER

(See page ST-4 or 5)

HINT: Use high-temperature grease to lubricate the bearings and gears when assembling the starter.

1. PLACE ARMATURE INTO FIELD FRAME

Apply grease to the armature bearings, and insert the armature into the field frame.

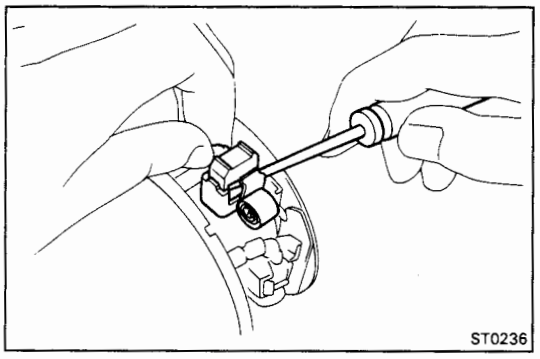

2. INSTALL BRUSH HOLDER

(a) Place the brush holder in position on the armature.

(b) Using a screwdriver, hold the brush spring back, and connect the brush into the brush holder. Connect the four brushes.

NOTICE: Check that positive (+) lead wires are not grounded.

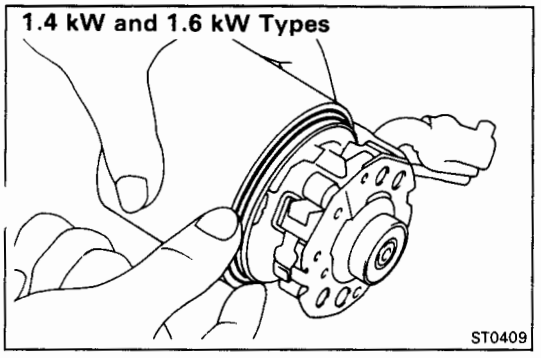

(c) (1.4 kW and 1.6 kW Types)
Place a new O-ring in position on the field frame.

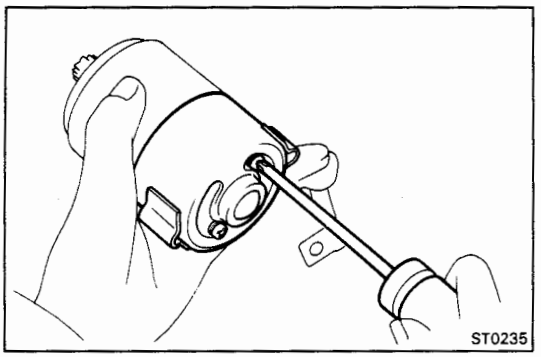

(d) Install the end cover with two new O-rings (1.4 kW and 1.6 kW types) and the two screws.

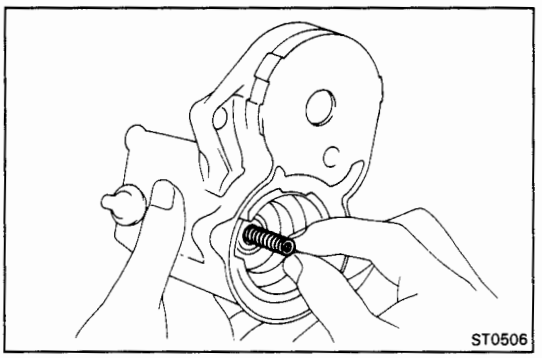

3. INSERT STEEL BALL INTO CLUTCH SHAFT HOLE

(a) Apply grease to the steel ball.

(b) Insert the steel ball into the clutch shaft hole.

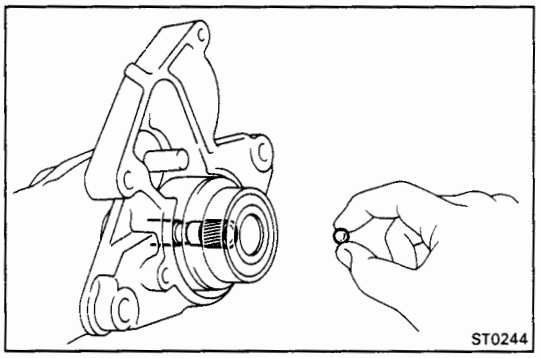

4. INSTALL GEAR(S)

(a) Apply grease to the return spring.

(b) Insert the return spring into the magnetic switch hole.

1.0 kW and 1.4 kW (Compact) Types

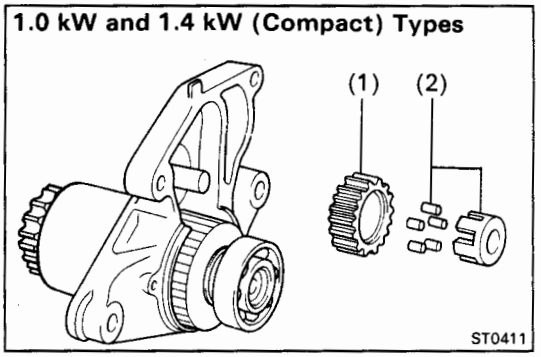

(c) Place the following parts in position on the starter housing:

(1.0 kW and 1.4 kW (Compact) Types)

(1) Idler gear

(2) Bearing

1.4 kW (Conventional) and 1.6 kW Types

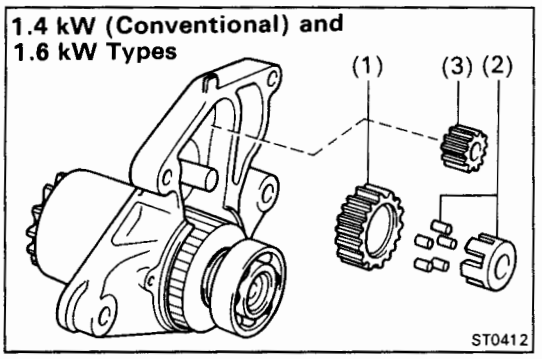

(1.4 kW (Conventional) and 1.6 kW Types)

(1) Idler gear

(2) Bearing

(3) Pinion gear

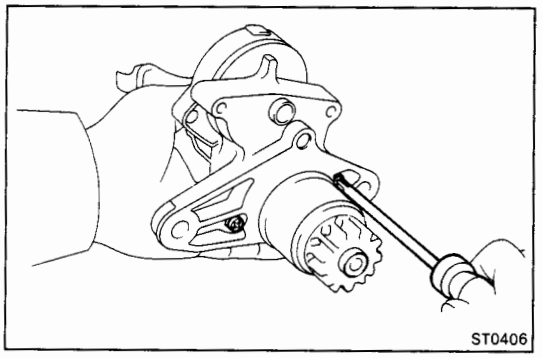

(d) Assemble the starter housing and magnetic switch with the two screws.

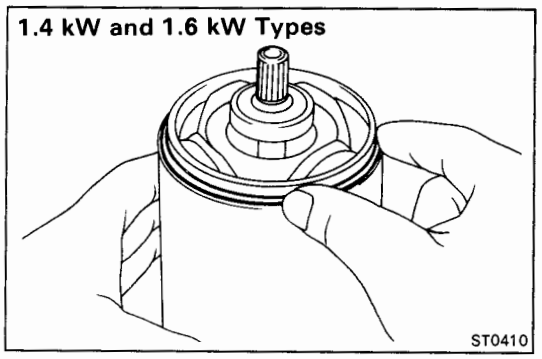

5. INSTALL FIELD FRAME AND ARMATURE ASSEMBLY

(a) (1.4 kW and 1.6 kW Types)
Place a new O-ring in position on the field frame.

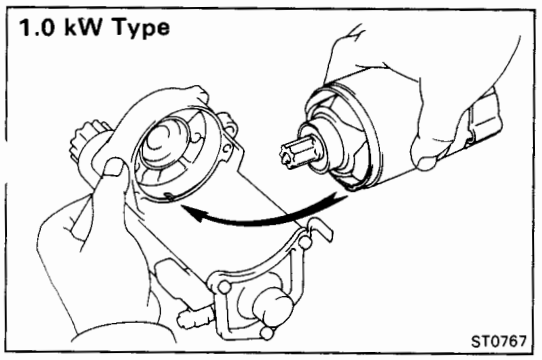

(b) Align the protrusion of the field frame with the cutout of the magnetic switch.

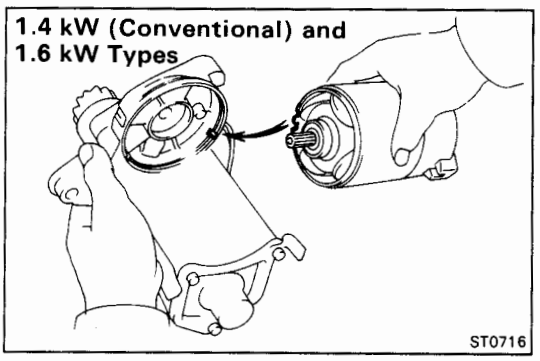

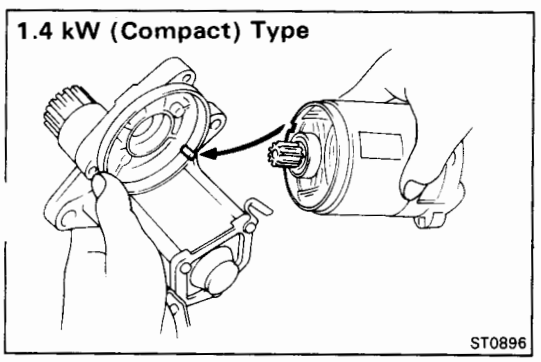

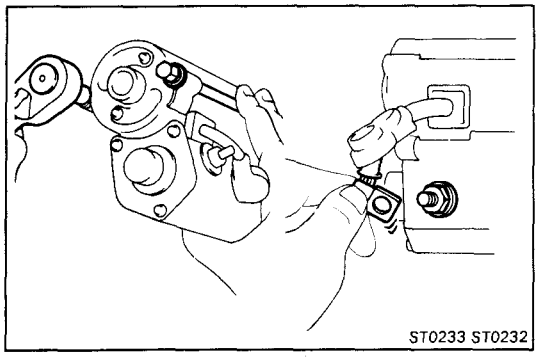

(c) Install the field frame and armature assembly with the two through bolts.

(d) Connect the lead wire to terminal C, and install the nut.

PERFORMANCE TEST OF STARTER

NOTICE: These tests must be performed within 3 to 5 seconds to avoid burning out the coil.

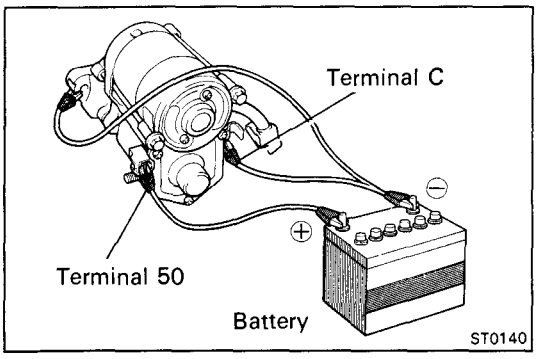

1. PERFORM PULL-IN TEST

(a) Disconnect the field coil lead wire from terminal C.

(b) Connect battery to the magnetic switch as shown. Check that the pinion gear moves outward.

If the pinion gear does not move, replace the magnetic switch.

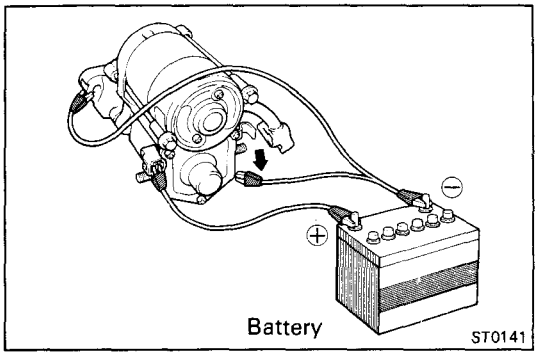

2. PERFORM HOLD-IN TEST

While connected as above with the pinion gear out, disconnect the negative (–) lead from terminal C. Check that the pinion gear remains out.

If the pinion gear returns inward, replace the magnetic switch.

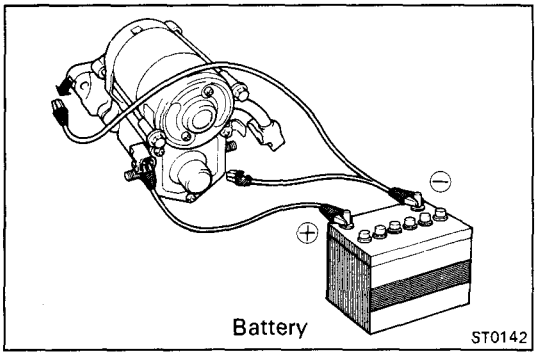

3. INSPECT PLUNGER RETURN

Disconnect the negative (+) lead from the switch body. Check that the pinion gear returns inward.

If the pinion gear does not return, replace the magnetic switch.

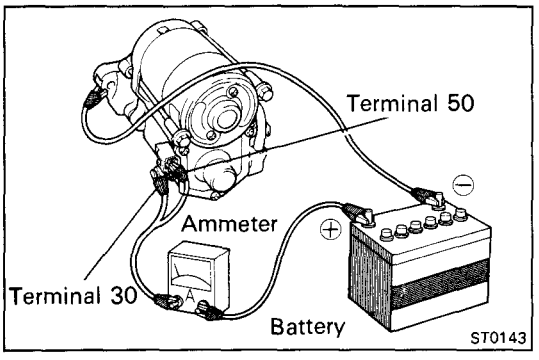

4. PERFORM NO-LOAD PERFORMANCE TEST

(a) Connect battery and ammeter to the starter as shown.

(b) Check that the starter rotates smoothly and steadily with the pinion gear moving out. Check the reading on the ammeter.

Standard amperage: 90 A or less at 11.5 V

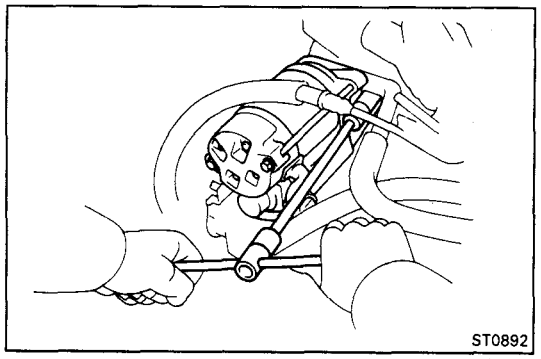

INSTALLATION OF STARTER

(See page ST-4)

1. **INSTALL STARTER**
   (a) Install the starter with the two bolts.
   Torque: 400 kg-cm (29 ft-lb, 39 N·m)
   (b) Connect the starter connector.
   (c) Connect the starter wire with the nut.
   (d) Connect the starter cable with the nut.
   (e) Install the terminal cover.

2. **INSTALL AIR CLEANER**
   3S-GTE (See step 40 on page EM-202)
   5S-FE (See step 35 on page EM-226)

3. **INSTALL LH ENGINE HOOD SIDE PANEL**

4. **CONNECT CABLE TO NEGATIVE TERMINAL OF BATTERY**

5. **CHECK THAT ENGINE STARTS**

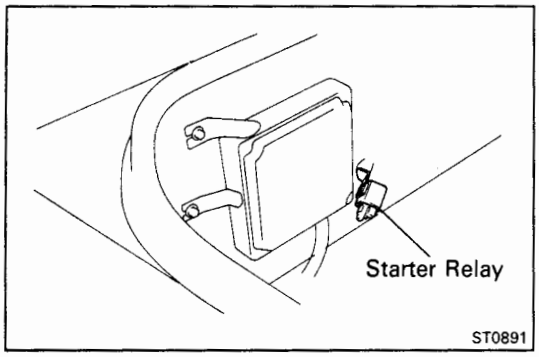

STARTER RELAY

INSPECTION OF STARTER RELAY

LOCATION: In the luggage compartment on the left side.

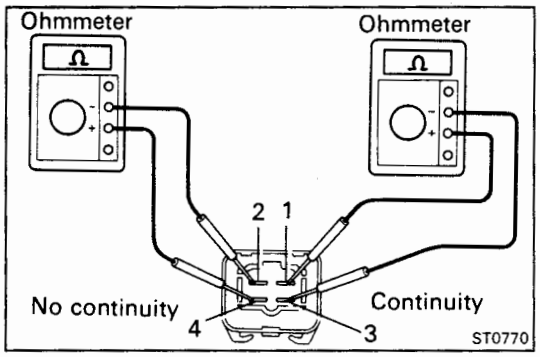

1. INSPECT RELAY CONTINUITY

(a) Using an ohmmeter, check that there is continuity between terminals 1 and 3.

(b) Check that there is no continuity between terminals 2 and 4.

If continuity is not as specified, replace the relay.

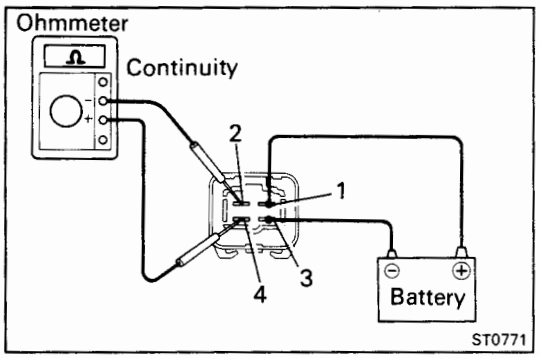

2. INSPECT RELAY OPERATION

(a) Apply battery voltage across terminals 1 and 3.

(b) Using an ohmmeter, check that there is continuity between terminals 2 and 4.

If operation is not as specified, replace the relay.

CLUTCH START SWITCH (M/T only)

(See page CL-4)

CHARGING SYSTEM

	Page
PRECAUTIONS	CH-2
TROUBLESHOOTING	CH-2
ON-VEHICLE INSPECTION	CH-3
ALTERNATOR	CH-6
IGNITION MAIN RELAY	CH-18

PRECAUTIONS

1. **Check that the battery cables are connected to the correct terminals.**
2. **Disconnect the battery cables when the battery is given a quick charge.**
3. **Do not perform tests with a high voltage insulation resistance tester.**
4. **Never disconnect the battery when the engine is running.**

TROUBLESHOOTING

Problem	Possible cause	Remedy	Page
Discharge warning light does not light with ignition ON and engine not	Fuse blown	Check "AM2" fuse	
	Light burned out	Replace light	
	Wiring connections loose	Tighten loose connections	
	Ignition main relay	Check relay	
	IC regulator faulty	Replace IC regulator	CH-8
Discharge warning light does not go out with engine running battery requires frequent recharging	Drive belt loose or worn	Adjust or replace drive belt	CH-3
	Battery cables loose, corroded or worm	Repair or replace cables	
	Fuse blown	Check "ECU-IG" fuse	
	Fusible link blown	Replace fusible link	
	IC regulator or alternator faulty	Check charging system	CH-4
	Wiring faulty	Repair wiring	

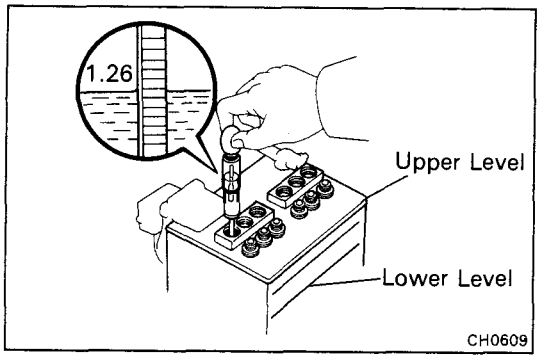

ON-VEHICLE INSPECTION

1. INSPECT BATTERY SPECIFIC GRAVITY AND ELECTROLYTE LEVEL

(a) Check the specific gravity of each cell.

Standard specific gravity:
1.25 – 1.27 when fully charged at 20°C(68°F)

If not within specification, charge the battery.

(b) Check the electrolyte quantity of each cell.

If insufficient, refill with distilled (or purified) water.

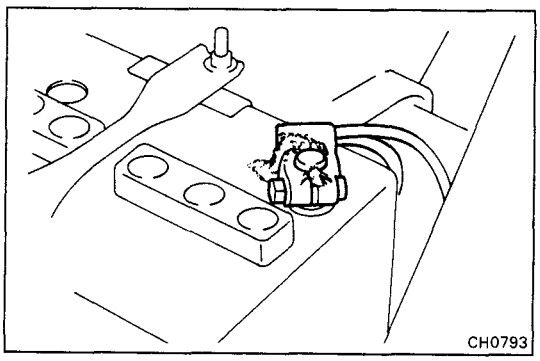

2. CHECK BATTERY TERMINALS, FUSIBLE LINKS AND FUSES

(a) Check that the battery terminals are not loose or corroded.

(b) Check the fusible links and fuses for continuity.

Fusible link:	**MAIN**	**2.0L**
	ALT	**120A**
	AM1	**50A**
	AM2	**40A**
Fuse:	**ECU-IG**	**15A**
	ALT SENCING	**7.5A**
	AM2	**7.5A**

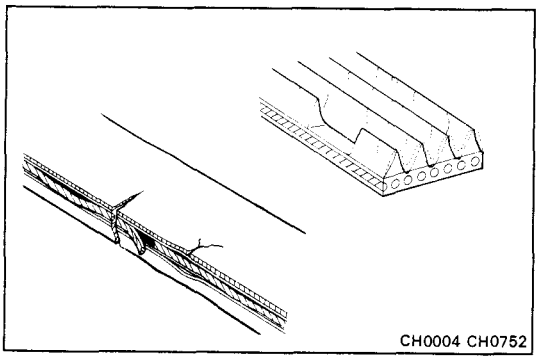

3. INSPECT ALTERNATOR DRIVE BELT

(a) Visually check the drive belt for excessive wear. frayed cirds etc.

If necessary, replace the drive belt.

HINT: Cracks on rib side of a drive belt are considered acceptable. If the drive belt has chunks missing from the ribs, it should be replaced.

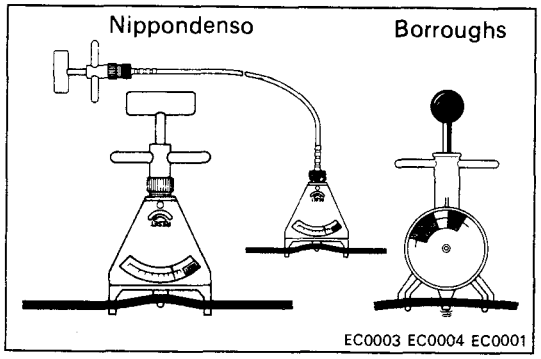

(b) Using a belt tension gauge, measure the drive belt tension.

Belt tension gauge:

Nippondenso	BTG-20 (95506-00020)
Borroughs	No. BT-33-73F

Drive belt tension:	**New belt**	**120 ± 20 lb**
	Used belt	**104 ± 20 lb**

If the belt tension is not as specified, adjust it.

HINT:

- "New belt" refer to a belt which has been used 5 minutes or less on a running engine.
- "Used belt" refers to a belt which has been used on a running engine for 5 minutes or more.
- After installing a belt, check that it fits properly in the ribbed grooves.
- Check by hand to confirm that the belt has not slipped out of the groove on the bottom of the pulley.
- After installing a new belt, run the engine for about 5 minutes and recheck the belt tension.

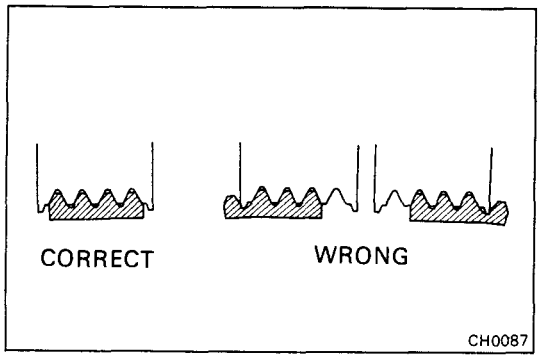

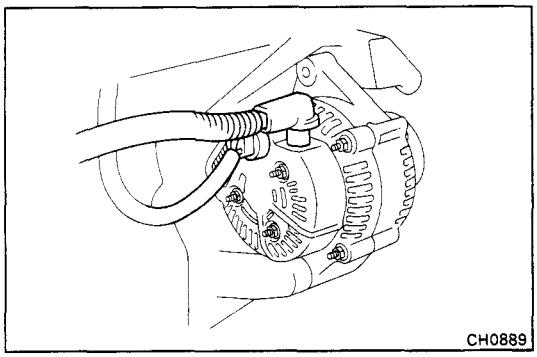

4. VISUALLY CHECK ALTERNATOR WIRING AND LISTEN FOR ABNORMAL NOISES

(a) Check that the wiring is in good condition.

(b) Check that there is no abnormal noise from the alternator while the engine is running.

5. INSPECT CHARGE WARNING LIGHT CIRCUIT

(a) Warm up the engine and then turn it off.

(b) Turn off all accessories.

(c) Turn the ignition switch to "ON". Check that the charge warning light is lit.

(d) Start the engine. Check that the light goes out.

If the light does not go off as specified, troubleshoot the charge light circuit.

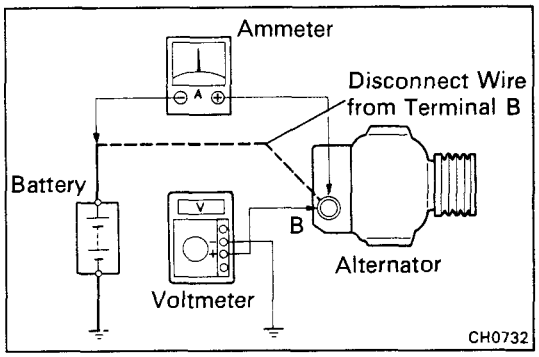

6. INSPECT CHARGING CIRCUIT WITHOUT LOAD

HINT: If a battery/alternator tester is available, connect the tester to the charging circuit as per manufacturer's instructions.

(a) If a tester is not available, connect a voltmeter and ammeter to the charging circuit as follows:

- Disconnect the wire from terminal B of the alternator and connect it to the negative (–) probe of the ammeter.
- Connect the positive (+) probe of the ammeter to terminal B of the alternator.
- Connect the positive (+) probe of the voltmeter to terminal B of the alternator.
- Ground the negative (–) probe of the voltmeter.

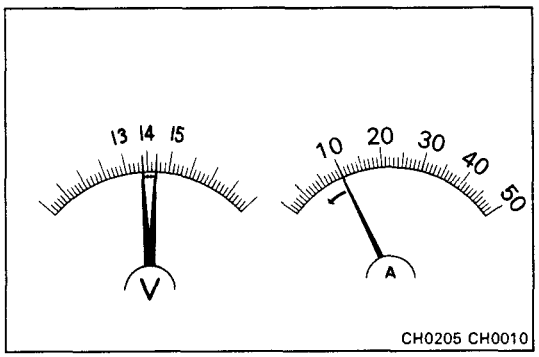

(b) Check the charging circuit as follows:

With the engine running from idling to 2,000 rpm, check the reading on the ammeter and voltmeter.

Standard amperage: **10 A or less**

Standard voltage: **13.9 – 15.1 V at 25°C (77°F)**
13.5 – 14.3 V at 115°C (239°F)

If the voltmeter reading is greater than standard voltage, replace the IC regulator.

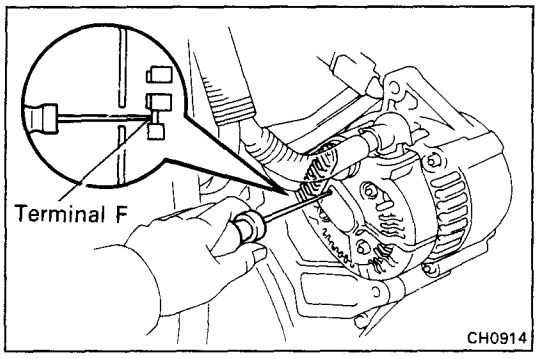

If the voltmeter reading is less than standard voltage, check the IC regulator and alternator as follows:

- With terminal F grounded, start the engine and check the voltmeter reading of terminal B.

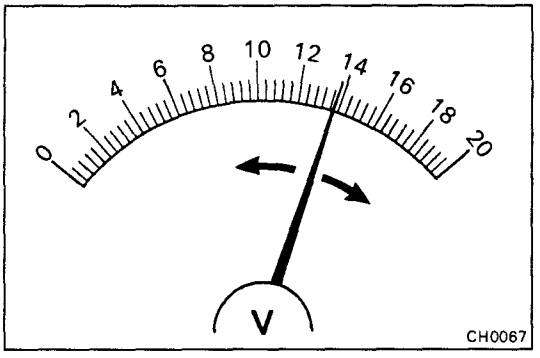

- If the voltmeter reading is greater than standard voltage, replace the IC regulator.
- If the voltmeter reading is less than standard voltage, check the alternator.

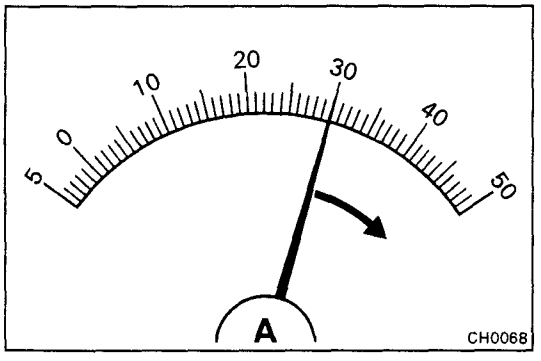

7. INSPECT CHARGING CIRCUIT WITH LOAD

(a) With the engine running at 2,000 rpm, turn on the high beam headlights and place the heater blower switch at "HI".

(b) Check the reading on the ammeter.

Standard amperage: 30 A or more

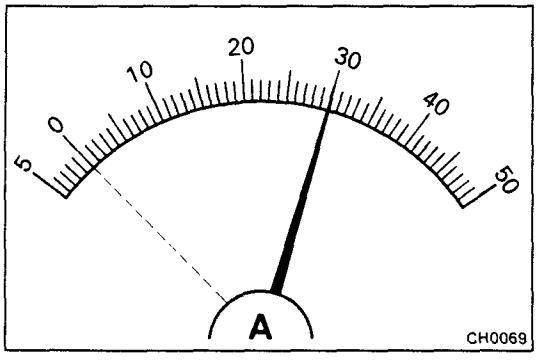

If the ammeter reading is less than standard amperage, repair the alternator. (See page CH-8)

HINT: With the battery fully charged, the indication will sometimes be less than standard amperage.

ALTERNATOR

REMOVAL OF ALTERNATOR

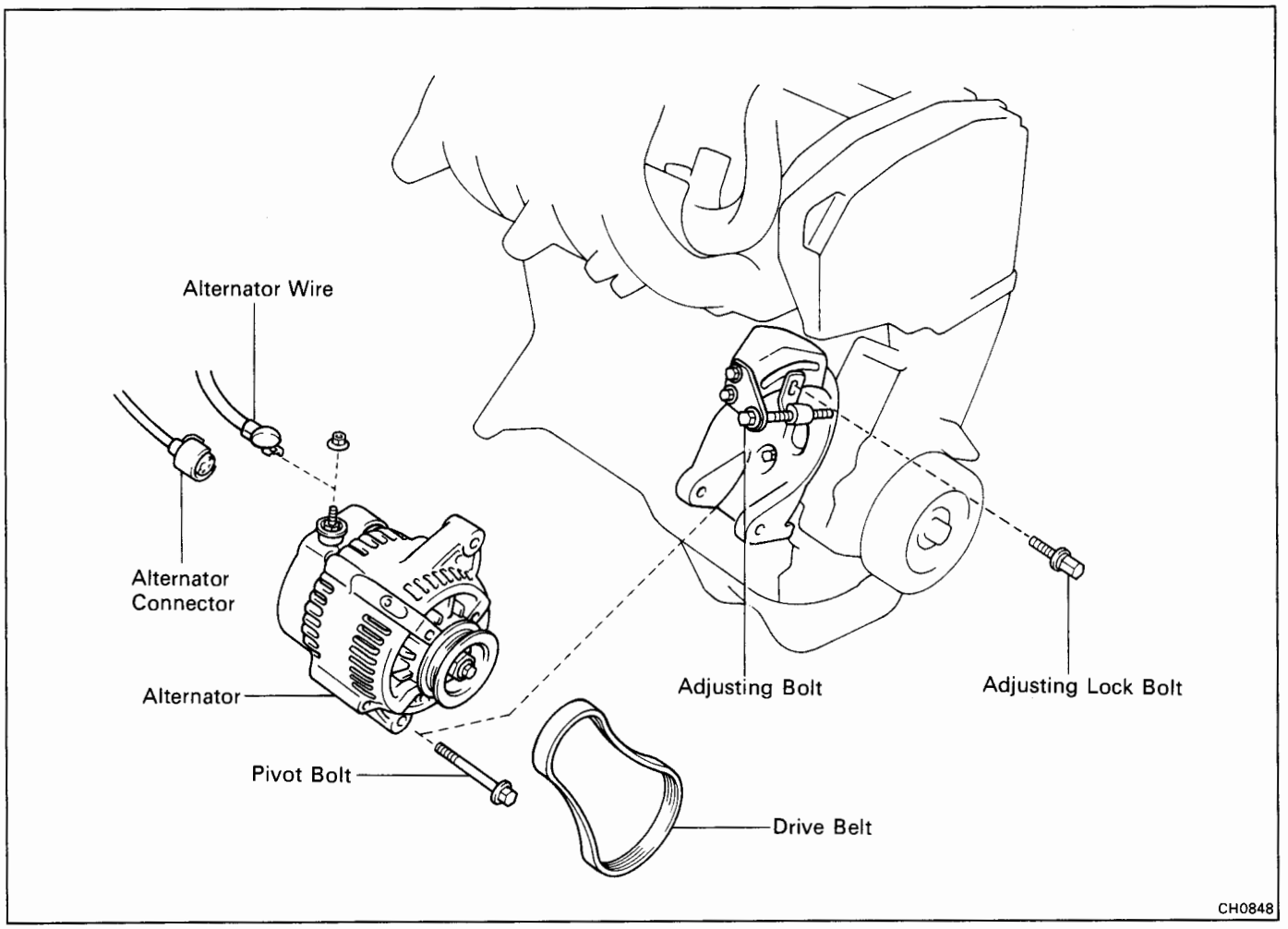

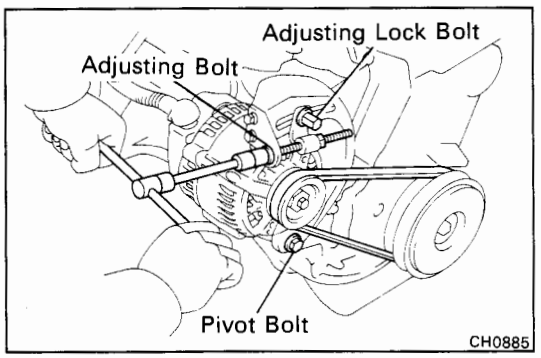

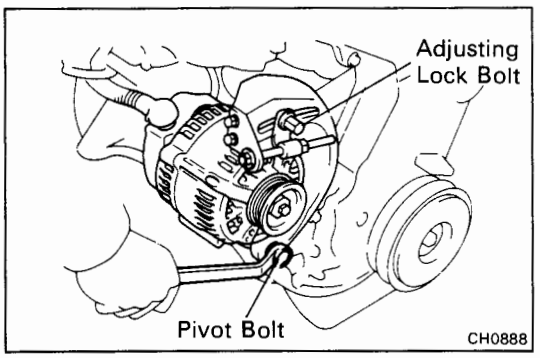

1. **DISCONNECT CABLE FROM NEGATIVE TERMINAL OF BATTERY**

   CAUTION: Work must be started after approx. 20 seconds or longer from the time the ignition switch is turned to the "LOCK" position and the negative (–) terminal cable is disconnected from the battery.

2. **REMOVE DRIVE BELT**
   (a) Loosen the pivot bolt and adjusting lock bolt.
   (b) Loosen the adjusting bolt, and disconnect the drive belt from the alternator.

3. **REMOVE ALTERNATOR**
   (a) Disconnect the alternator connector.
   (b) Remove the nut, and disconnect the alternator wire.
   (c) Remove the pivot bolt, adjusting lock bolt and alternator.

COMPONENTS

70 A Type

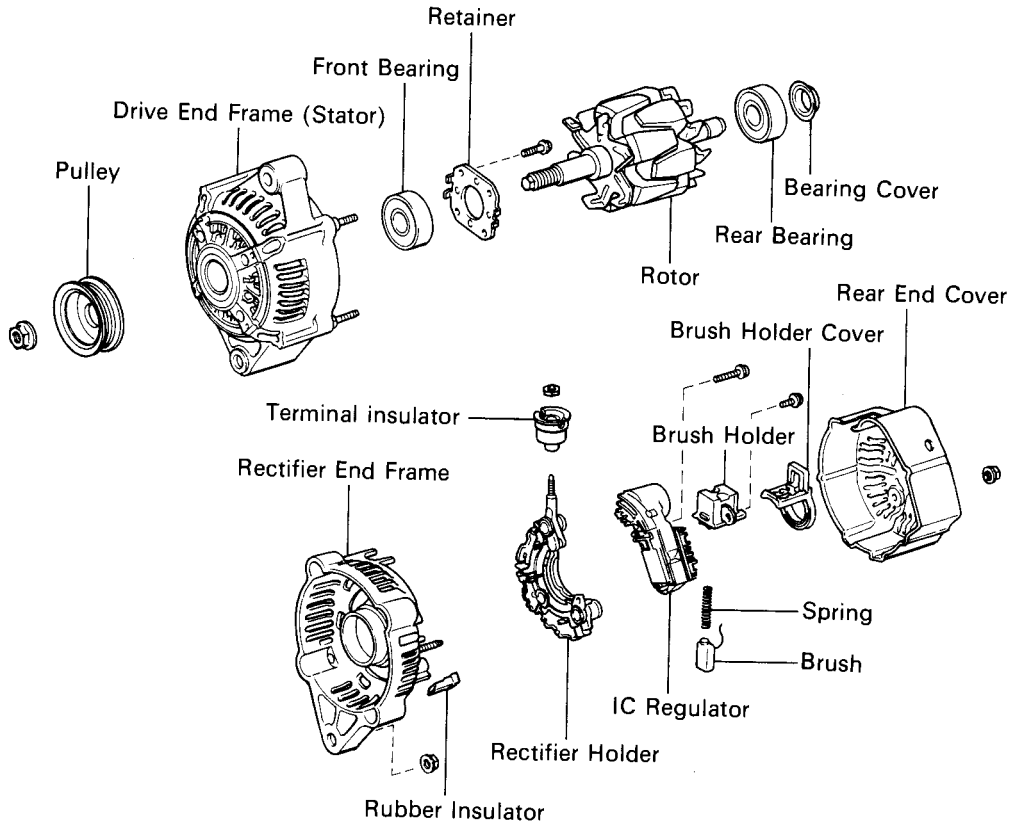

80 A and 100 A Types

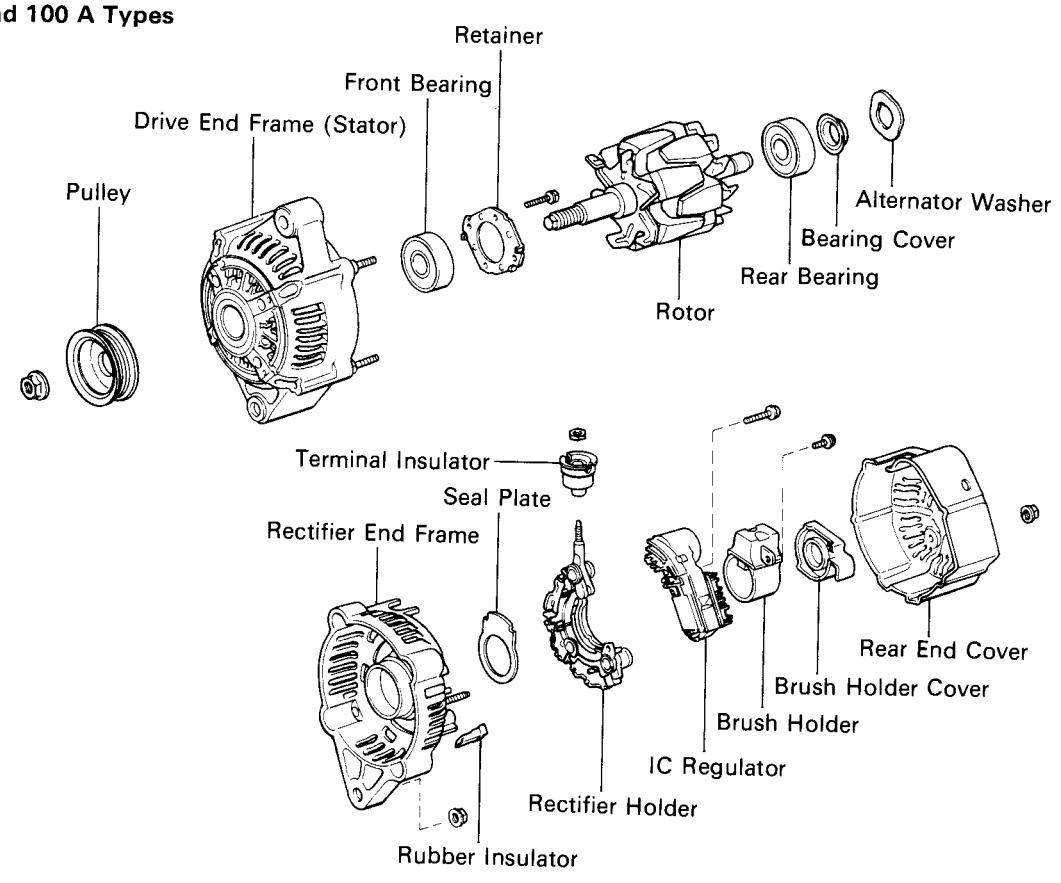

CH0922
CH0921

DISASSEMBLY OF ALTERNATOR

(See page CH-7)

1. REMOVE REAR END COVER

(a) Remove the nut and terminal insulator.

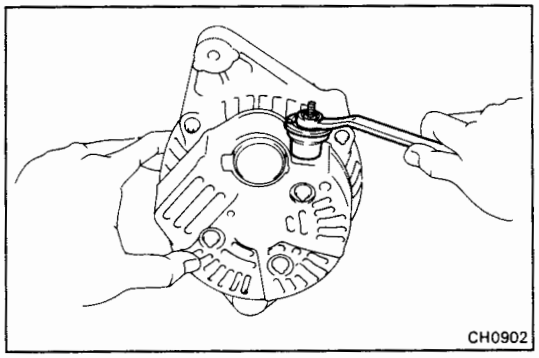

(b) Remove the three nuts and end cover.

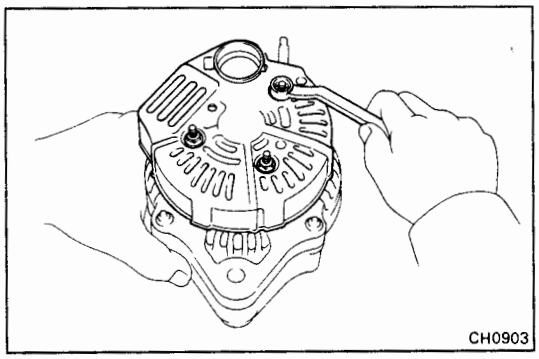

2. REMOVE BRUSH HOLDER AND IC REGULATOR

(a) (80 A and 100 A Types)
Remove the brush holder cover from the brush holder.

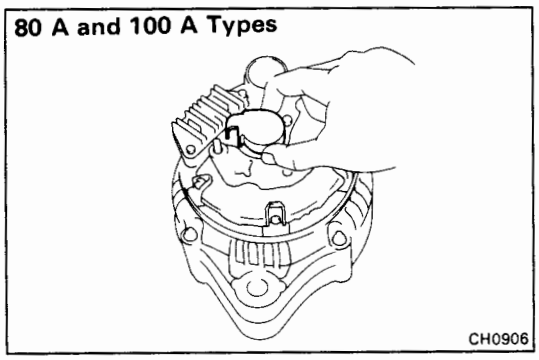

(b) Remove the five screws, brush holder and IC regulator.

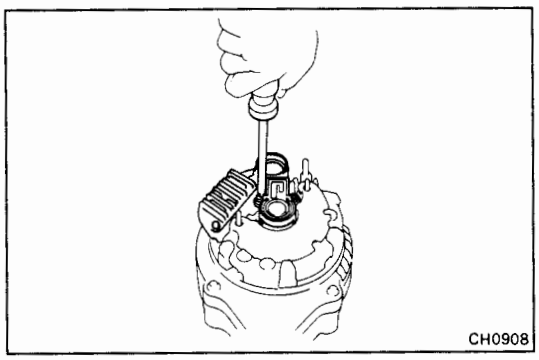

3. REMOVE RECTIFIER HOLDER

(a) Remove the four screws and rectifier holder.

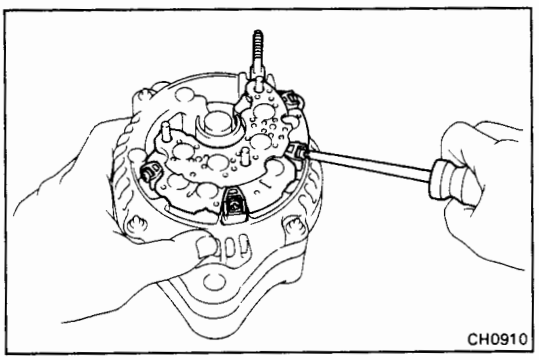

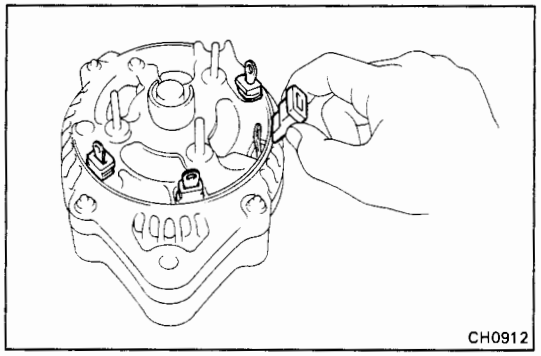

(b) Remove the four rubber insulators.

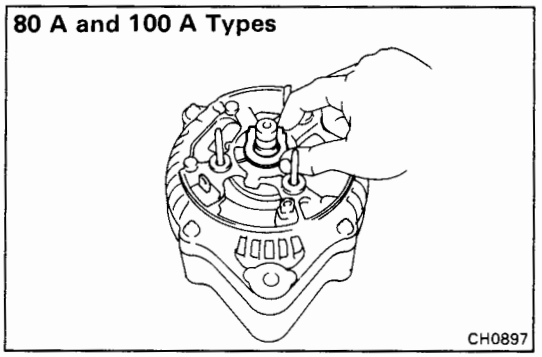

(c) (80 A and 100 A Types)
Remove the seal plate.

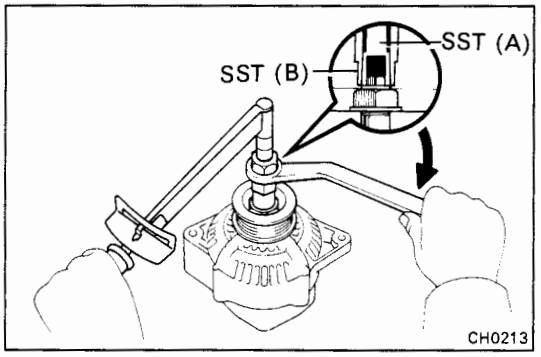

4. REMOVE PULLEY

(a) Hold SST (A) with a torque wrench, and tighten SST (B) clockwise to the specified torque.

SST 09820-63010

Torque: 400 kg-cm (29 ft-lb, 39 N·m)

(b) Check that SST (A) is secured to the rotor shaft.

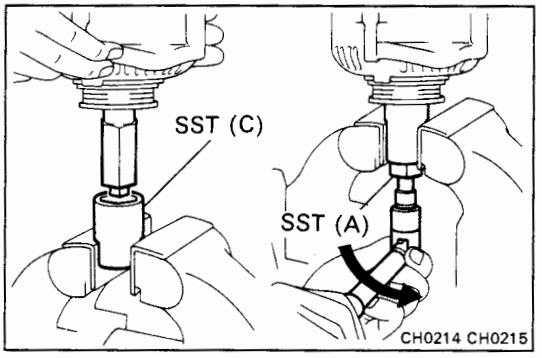

(c) As shown in the figure, mount SST (C) in a vise, and install the alternator to SST (C).

(d) To loosen the pulley nut turn SST (A) in the direction shown in the figure.

NOTICE: To prevent damage to the rotor shaft, do not loosen the pulley nut more than one-half of a turn.

(e) Remove the alternator from SST (C).

(f) Turn SST (B) and remove SST (A and B).

(g) Remove the pulley nut and pulley.

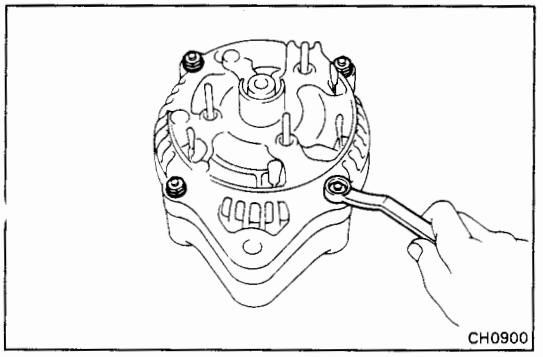

5. REMOVE RECTIFIER END FRAME

(a) Remove the four nuts.

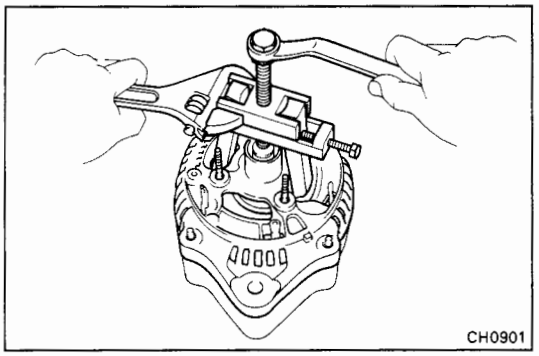

(b) Using SST, remove the rectifier end frame.
SST 09286-46011

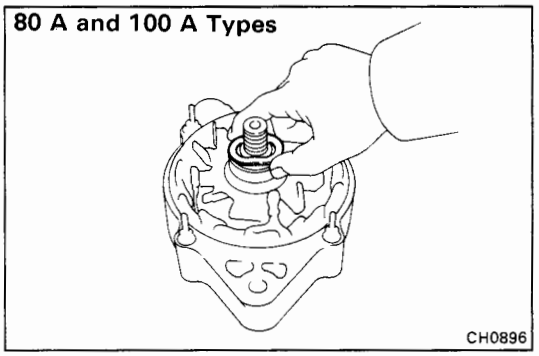

(c) (80 A and 100 A Types)
Remove the alternator washer.

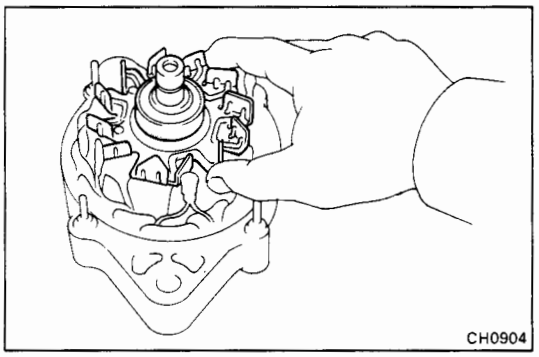

6. REMOVE ROTOR FROM DRIVE END FRAME

INSPECTION AND REPAIR OF ALTERNATOR

Rotor

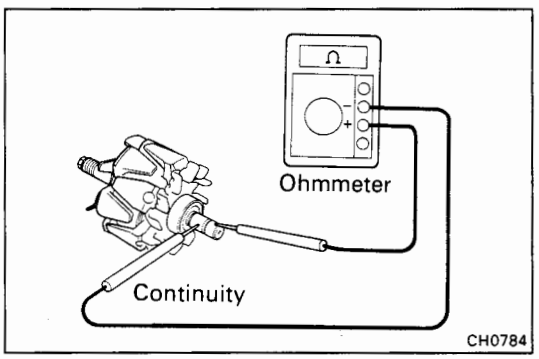

1. INSPECT ROTOR FOR OPEN CIRCUIT

Using an ohmmeter, check that there is continuity between the slip rings.

Standard resistance (Cold): 2.8 – 3.0 Ω

If there is no continuity, replace the rotor.

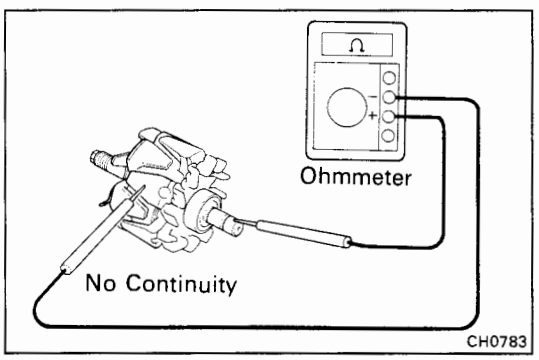

2. INSPECT ROTOR FOR GROUND

Using an ohmmeter, check that there is no continuity between the slip ring and rotor.

If there is continuity, replace the rotor.

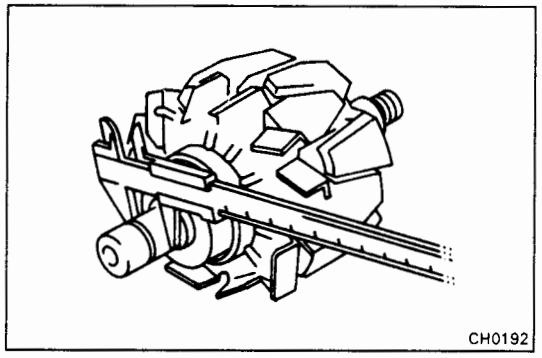

3. INSPECT SLIP RINGS

(a) Check that the slip rings are not rough or scored.

If rough or scored, replace the rotor.

(b) Using vernier calipers, measure the slip ring diameter.

Standard diameter: 14.2 – 14.4 mm (0.559 – 0.567 in.)

Minimum diameter: 12.8 mm (0.504 in.)

If the diameter is less than minimum, replace the rotor.

Stator (Drive End Frame)

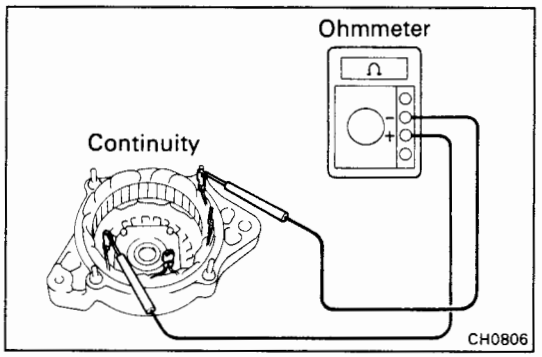

1. INSPECT STATOR FOR OPEN CIRCUIT

Using an ohmmeter, check that there is continuity between the coil leads.

If there is no continuity, replace the drive end frame assembly.

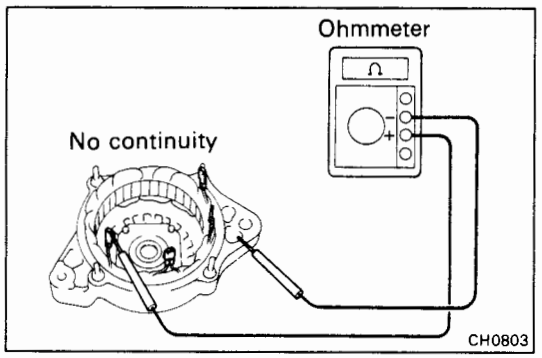

2. INSPECT STATOR FOR GROUND

Using an ohmmeter, check that there is no continuity between the coil lead and drive end frame.

If there is continuity, replace the drive end frame assembly.

Brushes

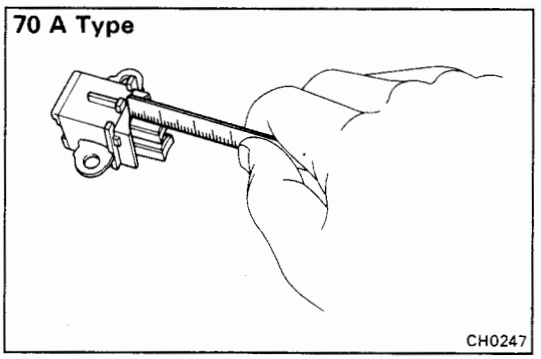

1. INSPECT EXPOSED BRUSH LENGTH

Using scale or vernier calipers, measure the exposed brush length.

Standard exposed length: 10.5 mm (0.413 in.)

Minimum exposed length: 1.5 mm (0.059 in.)

If the exposed length is less than minimum, replace the brushes (70 A type) or brushes and brush holder assembly (80 A and 100 A types).

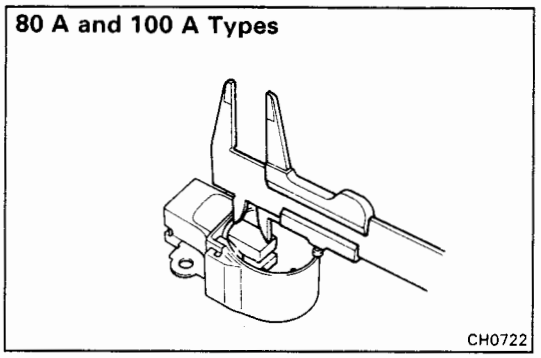

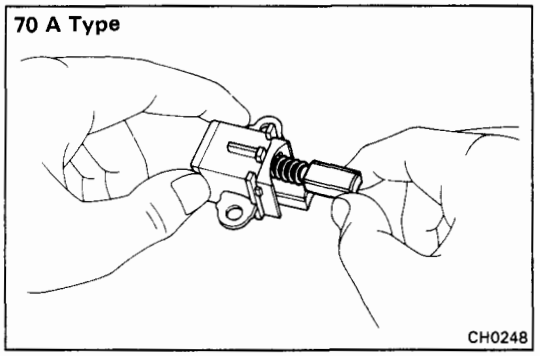

2. **(70 A TYPE)**
IF NECESSARY, REPLACE BRUSHES
   (a) Unsolder and remove the brush and spring.
   (b) Run the wire of a new brush through the hole in the brush holder, and insert the spring and brush into the brush holder.

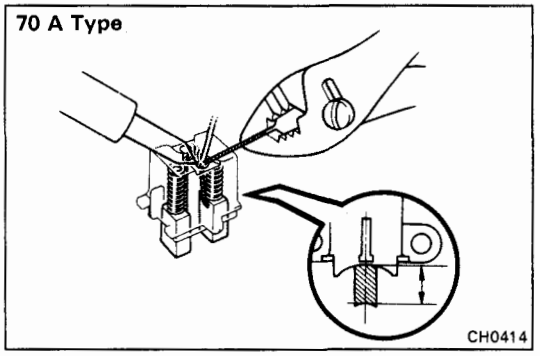

   (c) Solder the brush wire to the brush holder at specified exposed length.

   Exposed length: 10.5 mm (0.413 in.)

   (d) Check that the brush moves smoothly in the brush holder.
   (e) Cut off the excess wire.
   (f) Apply insulation paint to the soldered point.

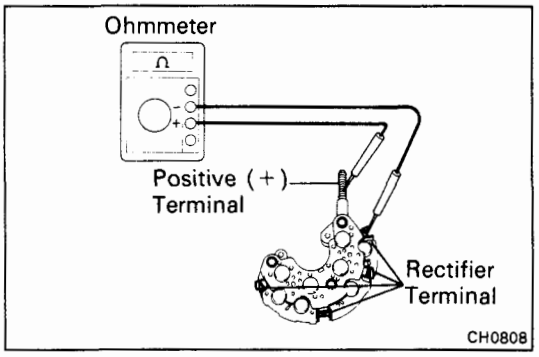

Rectifiers (Rectifier Holder)

1. **INSPECT POSITIVE RECTIFIER**
   (a) Using an ohmmeter, connect one test probe to the positive (+) terminal and the other to each rectifier terminal.
   (b) Reverse the polarity of the tester and repeat (a).
   (c) Check that one shows continuity and the other shows no continuity.

   If continuity is not as specified, replace the rectifier holder.

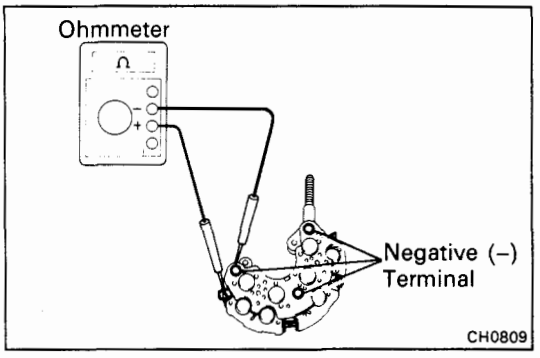

2. **INSPECT NEGATIVE RECTIFIER**
   (a) Using an ohmmeter, connect one test probe to each negative (–) terminal and the other to each rectifier terminal.
   (b) Reverse the polarity of the tester probes and repeat (a).
   (c) Check that one shows continuity and the other shows no continuity.

   If continuity is not as specified, replace the rectifier holder.

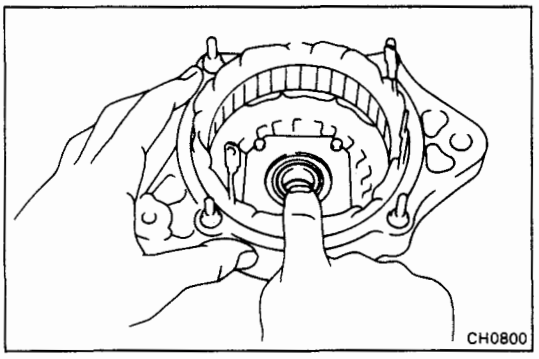

Bearings

1. **INSPECT FRONT BEARING**
   Check that the bearing is not rough or worn.

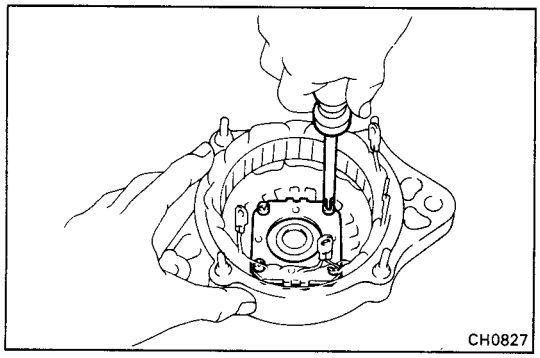

2. IF NECESSARY, REPLACE FRONT BEARING

(a) Remove the four screws, bearing retainer and bearing.

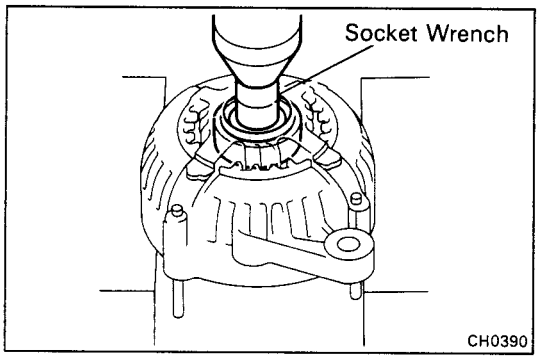

(b) Using socket wrench and press, press out the bearing.

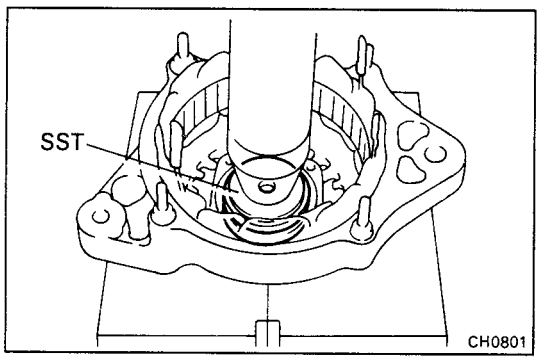

(c) Using SST and a press, press in a new bearing.
SST 09608-20012 (09608-00030)

(d) Install the bearing retainer with the four screws.

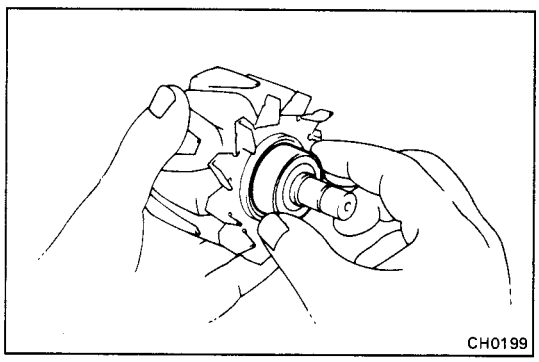

3. INSPECT REAR BEARING

Check that the bearing is not rough or worn.

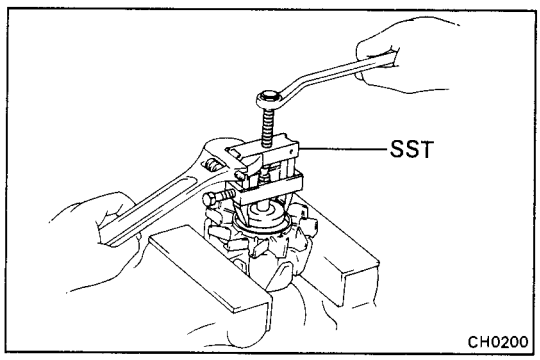

4. IF NECESSARY, REPLACE REAR BEARING

(a) Using SST, remove the bearing cover and bearing.
SST 09820-00021

NOTICE: Be careful not to damage the fan.

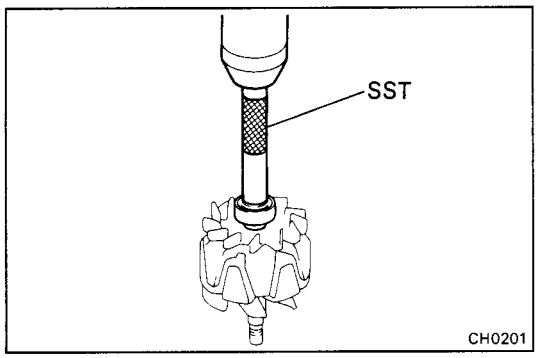

(b) Using SST and a press, press in a new bearing and bearing cover.

SST 09285-76010

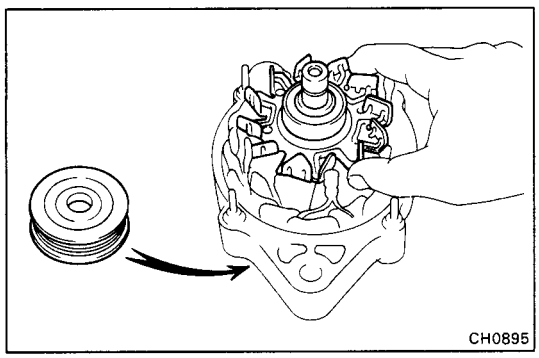

ASSEMBLY OF ALTERNATOR

(See page CH-7)

1. INSTALL ROTOR TO RECTIFIER END FRAME

(a) Place the retifier end frame on the pulley.

(b) Install the rotor to the retifier end frame.

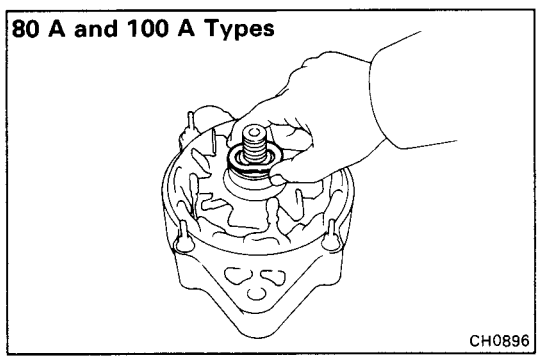

2. INSTALL RECTIFIER END FRAME

(a) (80 A and 100 A Types)
Place the alternator washer on the rotor.

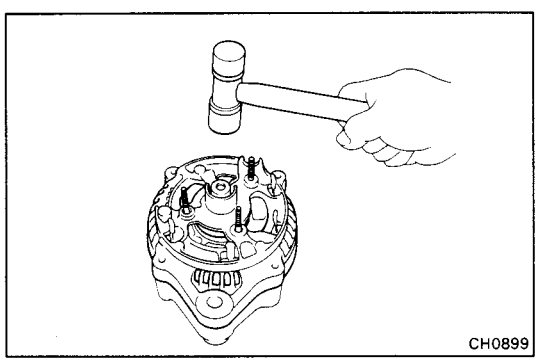

(b) Using a plastic-faced hammer, lightly tap in the rectifier end frame.

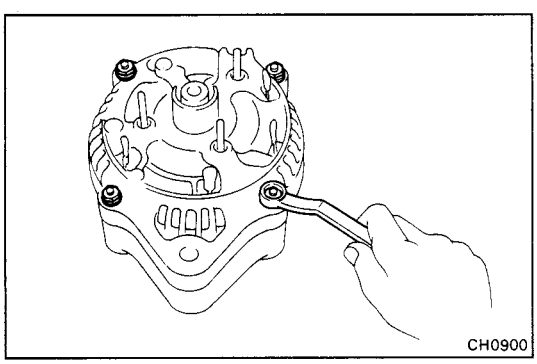

(c) Install the four nuts.

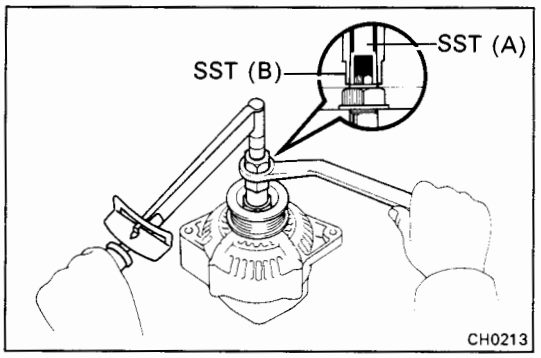

3. INSTALL PULLEY

(a) Install the pulley to the rotor shaft by tightening the pulley nut by hand.

(b) Hold SST (A) with a torque wrench, and tighten SST (B) clockwise to the specified torque.

SST 09820-63010

Torque: 400 kg-cm (29 ft-lb, 39 N·m)

(c) Check that SST (A) is secured to the pulley shaft.

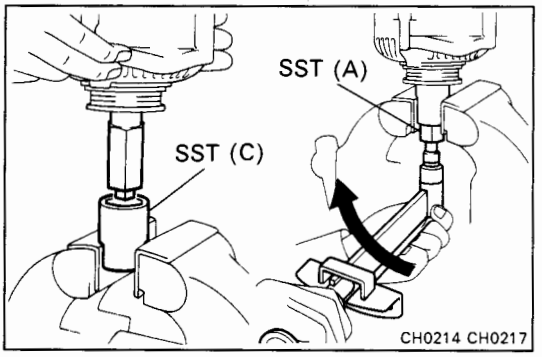

(d) As shown in the figure, mount SST (C) in a vise, and install the alternator to SST (C).

(e) To torque the pulley nut turn SST (A) in the direction shown in the figure.

Torque: 1,125 kg-cm (81 ft-lb, 110 N·m)

(f) Remove the alternator from SST (C).

(g) Turn SST (B) and remove SST (A and B).

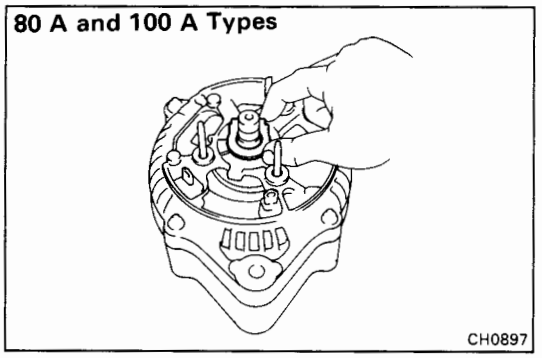

4. INSTALL RECTIFIER HOLDER

(a) (80 A and 100 A Types)
Place the seal plate on the rectifier end frame.

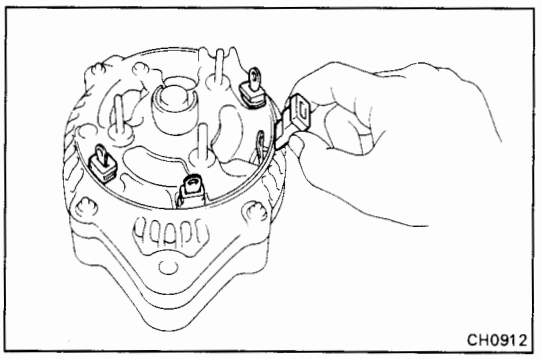

(b) Install the four rubber insulators on the lead wires.

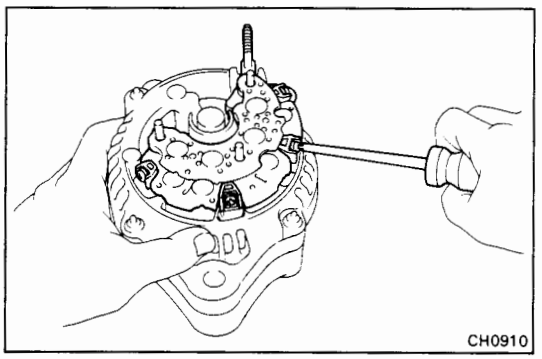

(c) Install the rectifier holder with the four screws.

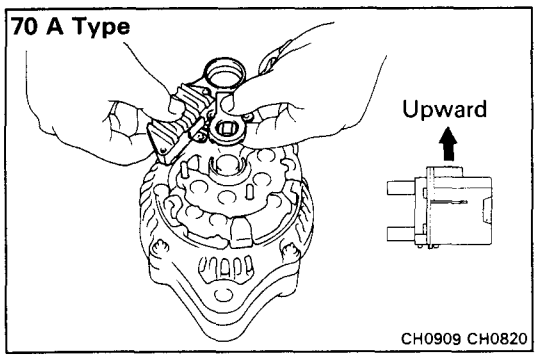

5. INSTALL IC REGULATOR AND BRUSH HOLDER

(70 A Type)

(a) Install the brush holder cover to the brush holder.

NOTICE: Be careful about the holder installation direction.

(b) Place the IC regulator together with the brush holder horizontally on the rectifier end frame.

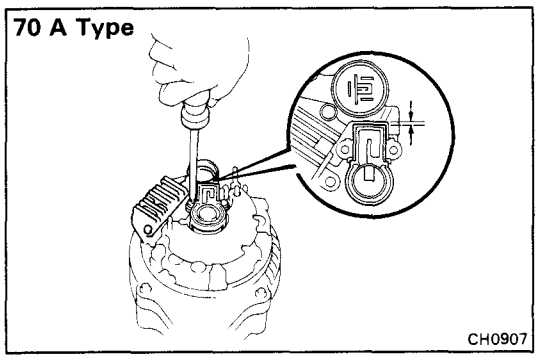

(c) Install the five screws until there is a clearance of approx. 1 mm (0.04 in.) between the brush holder and connector.

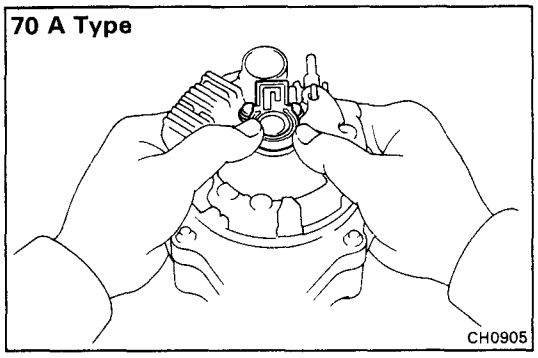

(d) Fit the brush holder cover.

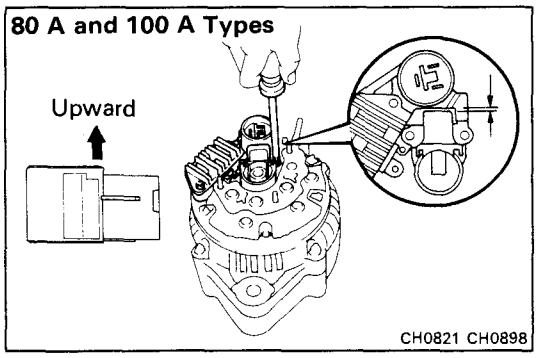

(80 A and 100 A Types)

(a) Place the IC regulator together and brush holder on the rectifier end frame.

NOTICE: Be careful about the holder installation direction.

(b) Install the five screws until there is a clearance of approx. 1 mm (0.04 in.) between the brush holder and connector.

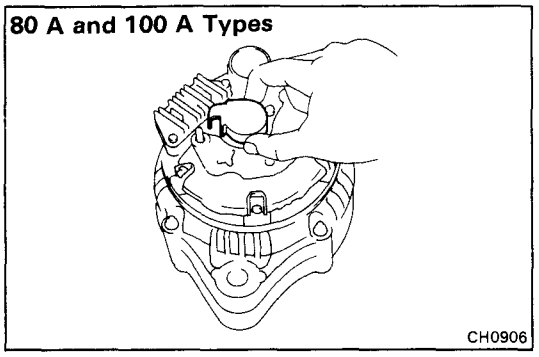

(c) Place the brush holder cover on the brush holder.

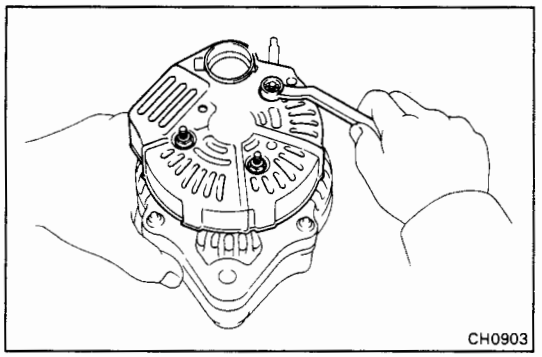

6. INSTALL REAR END COVER

(a) Install the end cover with the three nuts.

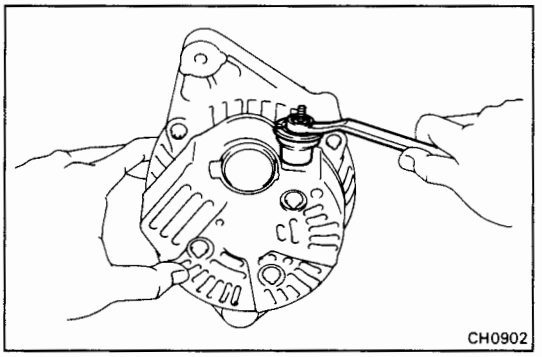

(b) Install the terminal insulator with the nut.

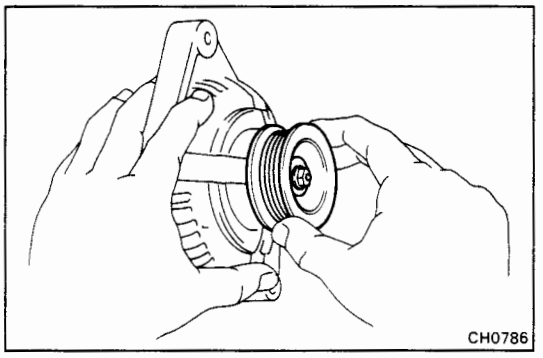

7. CHECK THAT ROTOR ROTATES SMOOTHLY

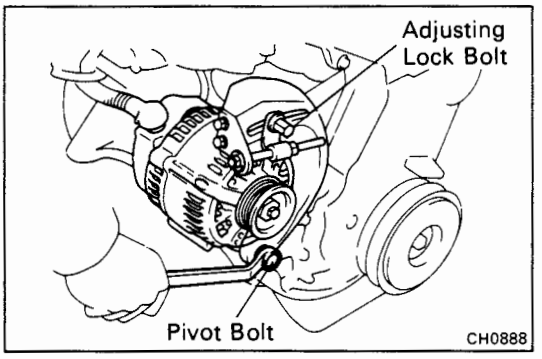

INSTALLATION OF ALTERNATOR

1. INSTALL ALTERNATOR

(a) Mount the alternator on the alternator brackets with the pivot bolt and adjusting lock bolt. Do not tighten the bolts yet.

(b) Connect the alternator connector.

(c) Connect the alternator wire with the nut.

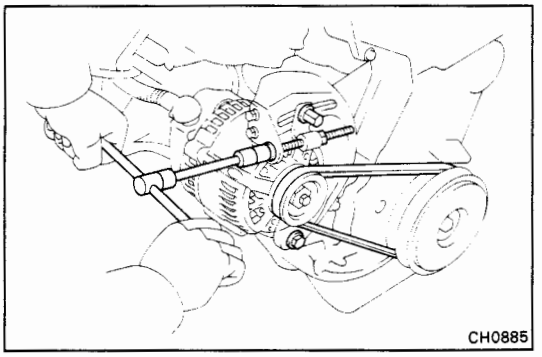

2. INSTALL DRIVE BELT

Adjust the drive belt tension.
(See step 3 on page CH-3)

Drive belt tension:	**New belt**	**120 ± 20 lb**
	Used belt	**104 ± 20 lb**

3. CONNECT CABLE TO NEGATIVE TERMINAL OF BATTERY

4. PERFORM ON-VEHICLE INSPECTION
(See steps 5 to 7 on pages CH-4 and 5)

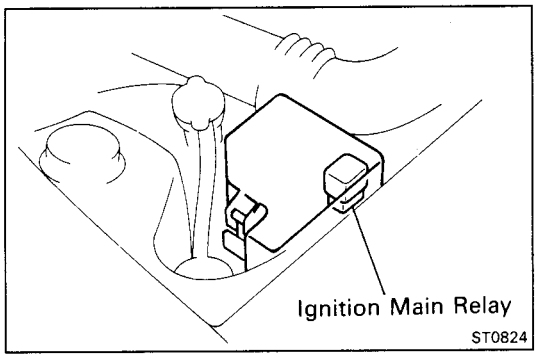

IGNITION MAIN RELAY "IGN"

INSPECTION OF IGNITION MAIN RELAY

LOCATION: In the engine compartment relay box.

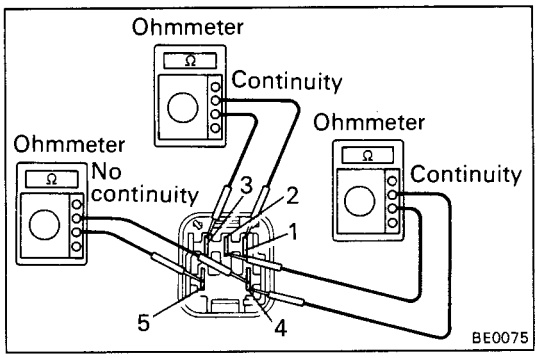

1. INSPECT RELAY CONTINUITY

(a) Using an ohmmeter, check that there is continuity between terminals 1 and 3.

(b) Check that there is continuity between terminals 2 and 4.

(c) Check that there is no continuity between terminals 4 and 5.

If continuity is not as specified, replace the relay.

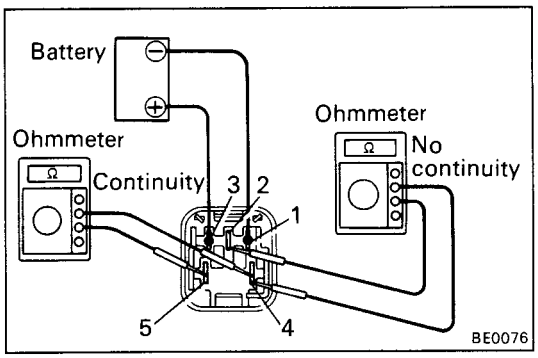

2. INSPECT RELAY OPERATION

(a) Apply battery voltage across terminals 1 and 3.

(b) Using an ohmmeter, check that there is no continuity between terminals 2 and 4.

(c) Check that there is continuity between terminals 4 and 5.

If operation is not as specified, replace the relay.

SERVICE SPECIFICATIONS

	Page
MAINTENANCE	A-2
ENGINE MECHANICAL (3S-GTE)	A-3
ENGINE MECHANICAL (5S-FE)	A-7
EXHAUST SYSTEM	A-11
TURBOCHARGER SYSTEM	A-11
EFI SYSTEM (3S-GTE)	A-12
EFI SYSTEM (5S-FE)	A-15
COOLING SYSTEM	A-18
LUBRICATION SYSTEM	A-19
IGNITION SYSTEM	A-20
STARTING SYSTEM	A-20
CHARGING SYSTEM	A-20
LUBRICANT	A-21

MAINTENANCE

Engine

Drive belt tension					
Alternator		New belt	120 ± 20 lb		
		Used belt	104 ± 20 lb		
A/C compressor		New belt	160 ± 25 lb		
		Used belt	100 ± 20 lb		
Engine coolant capacity (w/ Heater)		3S-GTE	13.6 liters	14.4 US qts	12.0 Imp. qts
		5S-FE	13.0 liters	13.7 US qts	11.4 Imp. qts
Engine oil capacity (Drain and refill)					
	3S-GTE w/ Oil filter change		3.9 liters	4.1 US qts	3.4 Imp. qts
	w/o Oil filter change		3.6 liters	3.8 US qts	3.2 Imp. qts
	5S-FE w/ Oil filter change		4.2 liters	4.4 US qts	3.7 Imp. qts
	w/o Oil filter change		3.8 liters	4.0 US qts	3.3 Imp. qts
Spark plug					
Type	3S-GTE	ND	PK20R8		
		NGK	BKR6EP8		
	5S-FE	ND	K16R-U11		
		NGK	BKR5EYA11		
Gap	3S-GTE		0.8 mm	0.031 in.	
	5S-FE		1.1 mm	0.043 in.	
Firing order			1 – 3 – 4 – 2		
Valve clearance	3S-GTE	Intake	0.15 – 0.25 mm	0.006 – 0.010 in.	
		Exhaust	0.20 – 0.30 mm	0.008 – 0.012 in.	
	5S-FE	Intake	0.19 – 0.29 mm	0.007 – 0.011 in.	
		Exhaust	0.28 – 0.38 mm	0.011 – 0.015 in.	

Chassis

Front and rear brakes					
Pad thickness		Limit	1.0 mm	0.039 in.	
Disc thickness	Limit	Front	24.0 mm	0.787 in.	
		Rear	15.0 mm	0.590 in.	
Disc runout	Limit	Front	0.07 mm	0.0028 in.	
		Rear	0.10 mm	0.0039 in.	
Front axle and suspension					
Ball joint vertical play		Limit	0 mm	0 in.	
Steering wheel play			30 mm	1.18 in.	
Torque specifications					
Front seat mount bolts			375 kg-cm	27 ft-lb	37 N·m
Strut bar bracket-to-body mount bolts			740 kg-cm	54 ft-lb	73 N·m
Rear suspension lower crossmember-to-body mount bolts			1,150 kg-cm	83 ft-lb	113 N·m

ENGINE MECHANICAL (3S-GTE)

Specifications

Idle speed				800 ± 50 rpm	
Intake manifold vacuum	at Idle speed			450 mmHg	17.7 in.Hg 60 kPa
Compression	at 250 rpm		STD	11.5 kg/cm² (164 psi, 1,128 kPa) or more	
			Limit	9.0 kg/cm²	128 psi 883 kPa
	Difference of pressure between each cylinder			1.0 kg/cm² (14 psi, 98 kPa) or less	
Timing belt tensioner	Protrusion			8.5 – 9.5 mm	0.335 – 0.374 in.
Cylinder head	Warpage	Cylinder block side	Limit	0.20 mm	0.0079 in.
		Intake manifold side	Limit	0.20 mm	0.0079 in.
		Exhaust manifold side	Limit	0.30 mm	0.0118 in.
	Valve seat	Refacing angle		30°, 45°, 75°	
		Contacting angle		45°	
		Contacting width		1.0 – 1.4 mm	0.039 – 0.055 in.
Valve guide bushing	Inside diameter			6.000 – 6.018 mm	0.2362 – 0.2369 in.
	Outside diameter (for repair part)		STD	11.030 – 11.041 mm	0.4343 – 0.4347 in.
			O/S 0.05	11.080 – 11.091 mm	0.4362 – 0.4367 in.
Valve	Valve overall length	STD	Intake	105.50 mm	4.1535 in.
			Exhaust	99.55 mm	3.9193 in.
		Limit	Intake	104.80 mm	4.1260 in.
			Exhaust	98.85 mm	3.8917 in.
	Valve face angle			44.5°	
	Stem diameter		Intake	5.960 – 5.975 mm	0.2346 – 0.2352 in.
			Exhaust	5.955 – 5.970 mm	0.2344 – 0.2350 in.
	Stem oil clearance	STD	Intake	0.025 – 0.058 mm	0.0010 – 0.0023 in.
			Exhaust	0.030 – 0.063 mm	0.0012 – 0.0025 in.
		Limit	Intake	0.08 mm	0.0031 in.
			Exhaust	0.10 mm	0.0039 in.
	Margin thickness		STD	0.8 – 1.2 mm	0.031 – 0.047 in.
			Limit	0.5 mm	0.020 in.
Valve spring	Squareness		Limit	2.0 mm	0.079 in.
	Free length			44.43 mm	1.7492 in.
	Installed tension at 34.4 mm (1.354 in.)			20.5 – 24.1 kg (45.2 – 53.1 lb, 201 – 236 N)	
Valve lifter	Lifter diameter			27.975 – 27.985 mm	1.1014 – 1.1018 in.
	Lifter bore diameter			28.000 – 28.021 mm	1.1024 – 1.1032 in.
	Oil clearance		STD	0.015 – 0.046 mm	0.0006 – 0.0018 in.
			Limit	0.07 mm	0.0028 in.
Manifold	Warpage		Limit	0.20 mm	0.0079 in.

Specifications (Cont'd)

Camshaft	Thrust clearance		STD	0.120 – 0.240 mm	0.0047 – 0.0094 in.
			Limit	0.30 mm	0.0118 in.
	Journal oil clearance		STD	0.025 – 0.062 mm	0.0010 – 0.0024 in.
			Limit	0.08 mm	0.0031 in.
	Journal diameter			26.959 – 26.975 mm	1.0614 – 1.0620 in.
	Circle runout		Limit	0.06 mm	0.0024 in.
	Cam lobe height		STD	41.010 – 41.110 mm	1.6146 – 1.6185 in.
			Limit	39.90 mm	1.5709 in.
T-VIS valve	Warpage		Limit	0.20 mm	0.0079 in.
Cylinder block	Cylinder head surface warpage		Limit	0.05 mm	0.0020 in.
	Cylinder bore diameter	STD	Mark 1	86.000 – 86.010 mm	3.3858 – 3.3862 in.
			Mark 2	86.010 – 86.020 mm	3.3862 – 3.3866 in.
			Mark 3	86.020 – 86.030 mm	3.3866 – 3.3870 in.
			Limit	86.23 mm	3.3949 in.
Piston and piston ring	Piston diameter		Mark 1	85.920 – 85.930 mm	3.3827 – 3.3831 in.
			Mark 2	85.930 – 85.940 mm	3.3831 – 3.3835 in.
			Mark 3	85.940 – 85.950 mm	3.3835 – 3.3839 in.
	Piston oil clearance		STD	0.070 – 0.090 mm	0.0028 – 0.0035 in.
			Limit	0.110 mm	0.0043 in.
	Piston ring groove clearance		No.1	0.040 – 0.080 mm	0.0016 – 0.0031 in.
			No.2	0.030 – 0.070 mm	0.0012 – 0.0028 in.
	Piston ring end gap	STD	No.1	0.330 – 0.550 mm	0.0130 – 0.0217 in.
			No.2	0.450 – 0.670 mm	0.0177 – 0.0264 in.
			Oil	0.200 – 0.600 mm	0.0079 – 0.0236 in.
		Limit	No.1	0.85 mm	0.0335 in.
			No.2	0.97 mm	0.0382 in.
			Oil	0.90 mm	0.0354 in.
Connecting rod	Thrust clearance		STD	0.160 – 0.312 mm	0.0063 – 0.0123 in.
			Limit	0.35 mm	0.35 in.
	Connecting rod bearing center wall thickness				
		STD	Mark 1	1.484 – 1.488 mm	0.0584 – 0.0586 in.
			Mark 2	1.488 – 1.492 mm	0.0586 – 0.0587 in.
			Mark 3	1.492 – 1.496 mm	0.0587 – 0.0589 in.
	Connecting rod oil clearance	STD	STD	0.024 – 0.055 mm	0.0009 – 0.0022 in.
			U/S 0.25	0.023 – 0.069 mm	0.0009 – 0.0027 in.
		Limit		0.08 mm	0.0031 in.
	Rod bending Limit per 100 mm (3.94 in.)			0.05 mm	0.0020 in.
	Rod twist Limit per 100 mm (3.94 in.)			0.15 mm	0.0059 in.
	Bushing inside diameter			22.005 – 22.017 mm	0.8663 – 0.8668 in.
	Piston pin diameter			21.997 – 22.009 mm	0.8660 – 0.8665 in.
	Piston pin oil clearance		STD	0.005 – 0.011 mm	0.0002 – 0.0004 in.
			Limit	0.05 mm	0.0020 in.

Specifications (Cont'd)

Crankshaft	Thrust clearance		STD	0.020 – 0.220 mm	0.0008 – 0.0087 in.
			Limit	0.30 mm	0.0118 in.
	Thrust washer thickness		STD	2.440 – 2.490 mm	0.0961 – 0.0980 in.
	Main journal oil clearance				
	STD	No.3	STD	0.025 – 0.044 mm	0.0010 – 0.0017 in.
			U/S 0.25	0.021 – 0.061 mm	0.0008 – 0.0024 in.
		Others	STD	0.015 – 0.034 mm	0.0006 – 0.0013 in.
			U/S 0.25	0.029 – 0.069 mm	0.0011 – 0.0027 in.
	Limit			0.08 mm	0.0031 in.
	Main journal diameter		STD	54.988 – 55.003 mm	2.1653 – 2.1655 in.
			U/S 0.25	54.745 – 54.755 mm	2.1553 – 2.1557 in.
	Main bearing center wall thickness				
	STD	No.3	Mark 1	1.992 – 1.995 mm	0.0784 – 0.0785 in.
			Mark 2	1.995 – 1.998 mm	0.0785 – 0.0787 in.
			Mark 3	1.998 – 2.001 mm	0.0787 – 0.0788 in.
			Mark 4	2.001 – 2.004 mm	0.0788 – 0.0789 in.
			Mark 5	2.004 – 2.007 mm	0.0789 – 0.0790 in.
	STD	Others	Mark 1	1.997 – 2.000 mm	0.0786 – 0.0787 in.
			Mark 2	2.000 – 2.003 mm	0.0787 – 0.0789 in.
			Mark 3	2.003 – 2.006 mm	0.0789 – 0.0790 in.
			Mark 4	2.006 – 2.009 mm	0.0790 – 0.0791 in.
			Mark 5	2.009 – 2.012 mm	0.0791 – 0.0792 in.
	Crank pin diameter		STD	47.985 – 48.000 mm	1.8892 – 1.8898 in.
			U/S 0.25	47.745 – 47.755 mm	1.8797 – 1.8801 in.
	Circle runout		Limit	0.06 mm	0.0024 in.
	Main journal taper and out-of-round		Limit	0.02 mm	0.0008 in.
	Crank pin taper and out-of-round		Limit	0.02 mm	0.0008 in.

Torque Specifications

Part tightened		kg-cm	ft-lb	N·m
Oil pump pulley x Oil pump drive shaft		355	26	35
No.2 idler pulley x Cylinder block		440	32	43
No.1 idler pulley bracket x Cylinder head		440	32	43
Crankshaft pulley x Crankshaft		1,100	80	108
Camshaft timing pulley x Camshaft		600	43	59
	For SST	420	30	41
Timing belt tensioner x Cylinder head		210	15	21
Cylinder head x Cylinder block	1st	500	36	49
	2nd	Turn 90°		
Camshaft bearing cap x Cylinder head		190	14	19
No.3 timing belt cover x Cylinder head		90	78 in.-lb	8.8
Cylinder head cover x Cylinder head		25	21 in.-lb	2.5
Intake manifold x Cylinder head		195	14	19
Intake manifold stay x Intake manifold		260	19	25
Intake manifold stay x Cylinder block		260	19	25
Water by-pass pipe x Water pump cover		80	69 in.-lb	7.8
Water outlet x Cylinder head		400	29	39

Torque Specifications (Cont'd)

Part tightened		kg-cm	ft-lb	N·m
EGR valve x Intake manifold		195	14	19
EGR valve x Cylinder head		260	19	25
EGR pipe x Cylinder head		195	14	19
LH engine hanger x Cylinder head	12 mm head bolt	130	9	13
	14 mm head bolt	195	14	19
Exhaust manifold x Cylinder head		530	38	52
Catalytic converter x Turbine outlet elbow		300	22	29
Catalytic converter stay x Catalytic converter		600	43	59
RH front engine hanger x Cylinder head		400	29	39
Main bearing cap x Cylinder block		600	43	59
Connecting rod cap x Connecting rod		680	49	67
Rear oil seal retainer x Cylinder block		95	82 in.-lb	9.3
Knock sensor x Cylinder head		450	33	44
RH engine mounting bracket x Cylinder block		620	45	61
Alternator bracket x Cylinder block		440	32	43
Rear end plate x Cylinder block		95	82 in.-lb	9.3
Flywheel x Crankshaft		1,100	80	108
LH engine mounting bracket x Transaxle		530	38	52
Rear engine mounting bracket x Transaxle	14 mm head bolt	530	38	52
	17 mm head bolt	790	57	77
LH engine mounting insulator x LH engine mounting bracket				
	Front side	650	47	63
	Rear side	740	54	73
LH engine mounting insulator x Body		800	58	78
RH engine mounting insulator x RH engine mounting bracket		530	38	52
RH engine mounting insulator x Body		800	58	78
RH engine mounting stay x RH engine mounting insulator		740	54	73
RH engine mounting stay x RH engine mounting bracket		740	54	73
Air cleaner case x Body		360	26	35
LH engine mounting stay x LH engine mounting insulator		740	54	73
LH engine mounting stay x Transaxle		250	18	25
Lateral control rod x LH engine mounting insulator		380	27	37
Front engine mounting bracket x Transaxle		790	57	77
Clutch release cylinder x Transaxle		120	9	12
Front engine mounting insulator x Body		740	54	73
Rear suspension lower crossmember x Body		1,150	83	113
Stabilizer link x Shock absober		500	36	49
Rear engine mounting insulator x Body		650	47	64
Rear engine mounting insulator x Mounting bracket		800	58	79
Front engine mounting insulator x Mounting bracket		980	71	96
A/C compressor x Cylinder block		250	18	25
A/C idler pulley bracket x Cylinder block		275	20	27
A/C idler pulley bracket x RH front engine hanger		375	27	37
Suspension upper brace x Body	Bolt	740	54	73
	Nut	650	47	64

ENGINE MECHANICAL (5S-FE)

Specifications

Idle speed	USA	M/T		750 ± 50 rpm	
		A/T		700 ± 50 rpm	
	CANADA	M/T		850 ± 50 rpm	
		A/T		750 ± 50 rpm	
Intake manifold vacuum	at Idle speed			450 mmHg	17.7 in.Hg 60 kPa
Compression pressure	at 250 rpm		STD	12.5 kg/cm² (178 psi, 1,226 kPa) or more	
			Limit	10.0 kg/cm²	142 psi 981 kPa
	Difference of pressure between each cylinder			1.0 kg/cm² (14 psi, 98 kPa) or less	
Idler pulley tension spring	Free length			46.0 mm	1.811 in.
	Installed load at 51.9 mm (2.043 in.)			4.75 – 5.25 kg (10.5 – 11.6 lb, 47 – 52 N)	
Cylinder head	Warpage	Cylinder block side	Limit	0.05 mm	0.020 in.
		Manifold side	Limit	0.08 mm	0.031 in.
	Valve seat	Refacing angle		30°, 45°, 75°	
		Contacting angle		45°	
		Contacting width		1.0 – 1.4 mm	0.039 – 0.055 in.
Valve guide bushing	Inside diameter			6.010 – 6.030 mm	0.2366 – 0.2374 in.
	Outside diameter (for repair part)		STD	11.048 – 11.059 mm	0.4350 – 0.4354 in.
			O/S 0.05	11.098 – 11.109 mm	0.4369 – 0.4374 in.
Valve	Valve overall length	STD	Intake	100.60 mm	3.9606 in.
			Exhaust	100.45 mm	3.9547 in.
		Limit	Intake	100.1 mm	3.941 in.
			Exhaust	100.0 mm	3.937 in.
	Valve face angle			44.5°	
	Stem diameter		Intake	5.970 – 5.985 mm	0.2350 – 0.2356 in.
			Exhaust	5.965 – 5.980 mm	0.2356 – 0.2354 in.
	Stem oil clearance	STD	Intake	0.025 – 0.060 mm	0.0010 – 0.0024 in.
			Exhaust	0.030 – 0.065 mm	0.0012 – 0.0026 in.
		Limit	Intake	0.08 mm	0.0031 in.
			Exhaust	0.10 mm	0.0039 in.
	Margin thickness		STD	0.8 – 1.2 mm	0.031 – 0.047 in.
			Limit	0.5 mm	0.020 in.
Valve spring	Squareness		Limit	2.0 mm	0.079 in.
	Free length			45.0 mm	1.772 in.
	Installed tension at 34.7 mm (1.366 in.)			16.7 – 19.3 kg (36.8 – 42.5 lb, 164 – 189 N)	
Valve lifter	Lifter diameter			27.975 – 27.985 mm	1.1014 – 1.1018 in.
	Lifter bore diameter			28.000 – 28.021 mm	1.1024 – 1.1032 in.
	Oil clearance		STD	0.015 – 0.046 mm	0.0006 – 0.0018 in.
			Limit	0.07 mm	0.0028 in.
Manifold	Warpage		Limit	0.3 mm	0.0118 in.

Specifications (Cont'd)

Camshaft	Thrust clearance	STD	Intake	0.045 – 0.100 mm	0.0018 – 0.0039 in.
			Exhaust	0.030 – 0.085 mm	0.0012 – 0.0033 in.
		Limit	Intake	0.12 mm	0.0047 in.
			Exhaust	0.10 mm	0.0039 in.
	Journal oil clearance		STD	0.025 – 0.062 mm	0.0010 – 0.0024 in.
			Limit	0.10 mm	0.0039 in.
	Journal diameter			26.959 – 26.975 mm	1.0614 – 1.0620 in.
	Circle runout		Limit	0.04 mm	0.0016 in.
	Cam lobe height	STD	Intake	35.310 – 35.410 mm	1.3902 – 1.3941 in.
			Exhaust	35.560 – 35.660 mm	1.4000 – 1.4039 in.
		Limit	Intake	35.20 mm	1.3858 in.
			Exhaust	35.45 mm	1.3957 in.
	Camshaft gear backlash		STD	0.020 – 0.200 mm	0.0008 – 0.0079 in.
			Limit	0.30 mm	0.0188 in.
	Camshaft gear spring end free distance			22.5 – 22.9 mm	0.886 – 0.902 in.
Cylinder block	Cylinder head surface warpage		Limit	0.05 mm	0.0020 in.
	Cylinder bore diameter	STD	Mark 1	87.000 – 87.010 mm	3.4252 – 3.4256 in.
			Mark 2	87.010 – 87.020 mm	3.4256 – 3.4260 in.
			Mark 3	87.020 – 87.030 mm	3.4260 – 3.4264 in.
		Limit	STD	87.23 mm	3.4342 in.
			O/S 0.50	87.73 mm	3.4350 in.
Piston and piston ring	Piston diameter	STD	Mark 1	86.911 – 86.921 mm	3.4217 – 3.4221 in.
			Mark 2	86.921 – 86.931 mm	3.4221 – 3.4225 in.
			Mark 3	86.931 – 86.941 mm	3.4225 – 3.4229 in.
		O/S 0.50		87.411 – 87.441 mm	3.4414 – 3.4426 in.
	Piston oil clearance		STD	0.079 – 0.099 mm	0.0031 – 0.0039 in.
			Limit	0.119 mm	0.0047 in.
	Piston ring groove clearance			0.030 – 0.070 mm	0.0012 – 0.0028 in.
	Piston ring end gap	STD	No.1	0.270 – 0.500 mm	0.0106 – 0.0197 in.
			No.2	0.350 – 0.600 mm	0.0138 – 0.0234 in.
			Oil	0.200 – 0.550 mm	0.0079 – 0.0217 in.
		Limit	No.1	1.10 mm	0.0433 in.
			No.2	1.20 mm	0.0472 in.
			Oil	1.15 mm	0.0453 in.
Connecting rod	Thrust clearance		STD	0.160 – 0.312 mm	0.0063 – 0.0123 in.
			Limit	0.35 mm	0.35 in.
	Connecting rod bearing center wall thickness				
		STD	Mark 1	1.484 – 1.488 mm	0.0584 – 0.0586 in.
			Mark 2	1.488 – 1.492 mm	0.0586 – 0.0587 in.
			Mark 3	1.492 – 1.496 mm	0.0587 – 0.0589 in.
	Connecting rod oil clearance				
		STD	STD	0.024 – 0.055 mm	0.0009 – 0.0022 in.
			U/S	0.023 – 0.069 mm	0.0009 – 0.0027 in.
		Limit		0.08 mm	0.0031 in.
	Rod bending Limit per 100 mm (3.94 in.)			0.05 mm	0.0020 in.
	Rod twist Limit per 100 mm (3.94 in.)			0.15 mm	0.0059 in.
	Bushing inside diameter			22.005 – 22.017 mm	0.8663 – 0.8668 in.
	Piston pin diameter			21.997 – 22.009 mm	0.8660 – 0.8665 in.
	Piston pin oil clearance		STD	0.005 – 0.011 mm	0.0002 – 0.0004 in.
			Limit	0.05 mm	0.0020 in.
	Connecting rod bolt outside diameter		STD	7.860 – 8.000 mm	0.3094 – 0.3150 in.
			Limit	7.60 mm	0.2992 in.

Specifications (Cont'd)

Crankshaft	Thrust clearance		STD	0.020 – 0.220 mm	0.0008 – 0.0087 in.
			Limit	0.30 mm	0.0118 in.
	Thrust washer thickness		STD	2.440 – 2.490 mm	0.0961 – 0.0980 in.
	Main journal oil clearance				
	STD	No.3	STD	0.025 – 0.044 mm	0.0010 – 0.0017 in.
			U/S 0.25	0.027 – 0.067 mm	0.0011 – 0.0026 in.
		Others	STD	0.015 – 0.034 mm	0.0006 – 0.0013 in.
			U/S 0.25	0.019 – 0.059 mm	0.0007 – 0.0023 in.
	Limit			0.08 mm	0.0031 in.
	Main journal diameter		STD	54.988 – 55.003 mm	2.1653 – 2.1655 in.
			U/S 0.25	54.745 – 54.755 mm	2.1553 – 2.1557 in.
	Main bearing center wall thickness				
	STD	No.3	Mark 1	1.992 – 1.995 mm	0.0784 – 0.0785 in.
			Mark 2	1.995 – 1.998 mm	0.0785 – 0.0787 in.
			Mark 3	1.998 – 2.001 mm	0.0787 – 0.0788 in.
			Mark 4	2.001 – 2.004 mm	0.0788 – 0.0789 in.
			Mark 5	2.004 – 2.007 mm	0.0789 – 0.0790 in.
	STD	Others	Mark 1	1.997 – 2.000 mm	0.0786 – 0.0787 in.
			Mark 2	2.000 – 2.003 mm	0.0787 – 0.0789 in.
			Mark 3	2.003 – 2.006 mm	0.0789 – 0.0790 in.
			Mark 4	2.006 – 2.009 mm	0.0790 – 0.0791 in.
			Mark 5	2.009 – 2.012 mm	0.0791 – 0.0792 in.
	Crank pin diameter		STD	51.985 – 52.000 mm	2.0466 – 2.0472 in.
			U/S 0.25	51.745 – 51.755 mm	2.0372 – 2.0376 in.
	Circle runout		Limit	0.06 mm	0.0024 in.
	Main journal taper and out-of-round		Limit	0.02 mm	0.0008 in.
	Crank pin taper and out-of-round		Limit	0.02 mm	0.0008 in.

Torque Specifications

Part tightened		kg-cm	ft-lb	N·m
Oil pump pulley x Oil pump drive shaft		290	21	28
No.2 idler pulley x Cylinder block		425	31	42
Crankshaft pulley x Crankshaft		1,100	80	108
Camshaft timing pulley x Camshaft		550	40	54
	For SST	380	27	37
No.1 idler pulley x Cylinder Head		425	31	42
Cylinder head x Cylinder block	1st	500	36	49
	2nd	Turn 90°		
Camshaft bearing cap x Cylinder head		190	14	19
Cylinder head cover x Cylinder head		180	13	18
RH front engine hanger x Cylinder head		250	18	25
LH front engine hanger x Cylinder head		250	18	25
No.3 timing belt cover x Cylinder head		80	69 in.-lb	7.8
Intake manifold x Cylinder head		195	14	19
Intake manifold stay x Intake manifold		195	14	19
Intake manifold stay x Cylinder block		425	31	42
EGR valve x Cylinder head		130	9	13

Torque Specifications (Cont'd)

Part tightened		kg-cm	ft-lb	N·m
EGR pipe x Cylinder head		600	43	59
Water by-pass pipe x Water pump cover		95	82 in.-lb	9.3
Water outlet x Cylinder head		150	11	15
Catalytic converter x Exhaust manifold		300	22	29
Exhaust manifold x Cylinder head		500	36	49
Catalytic converter stay x Catalytic converter		425	31	42
Catalytic converter stay x Cylinder block		425	31	42
Main bearing cap x Cylinder block		600	43	59
Connecting rod cap x Connecting rod	1st	250	18	25
	2nd	Turn 90°		
Rear oil seal retainer x Cylinder block		95	82 in.-lb	9.3
RH engine mounting bracket x Cylinder block		620	45	61
Alternator bracket x Cylinder block		440	32	43
Rear end plate x Cylinder block		95	82 in.-lb	9.3
Flywheel x Crankshaft (M/T)		900	65	88
Drive plate x Crankshaft (A/T)		850	61	83
LH engine mounting bracket x Transaxle		530	38	52
LH engine mounting insulator x LH engine mounting bracket				
	Front side	650	47	63
	Rear side	740	54	73
LH engine mounting insulator x Transaxle (with LH enigne mounting bracket)		530	38	52
LH engine mounting insulator x Body		800	58	78
RH engine mounting insulator x RH engine mounting bracket		530	38	52
RH engine mounting insulator x Body		800	58	78
RH engine mounting stay x RH engine mounting insulator		740	54	73
RH engine mounting stay x RH front engine hanger		740	54	73
Air cleaner case x Body		360	26	35
LH engine mounting stay x LH engine mounting insulator		740	54	73
LH engine mounting stay x Transaxle		250	18	25
Lateral control rod x LH engine mounting insulator		380	27	37
Front engine mounting bracket x Transaxle		790	57	77
Clutch release cylinder x Transaxle		120	9	12
Rear engine mounting bracket x Transaxle		790	57	77
Front engine mounting insulator x Body		740	54	73
Rear engine mounting insulator x Body		650	47	64
Rear engine mounting insulator x Mounting bracket		800	58	79
Front engine mounting insulator x Mounting bracket		980	71	96
A/C compressor x Cylinder block		250	18	25
A/C idler pulley bracket x Cylinder block		275	20	27
A/C idler pulley bracket x RH front engine hanger		375	27	37
Suspension upper brace x Body	Bolt	740	54	73
	Nut	650	47	64

EXHAUST SYSTEM

Part tightened	kg-cm	ft-lb	N·m
Front exhaust pipe x Catalytic converter	630	46	62
Front exhaust pipe x Tailpipe	440	32	43
Front exhaust pipe bracket x Rear suspension crossmember	210	15	21
Front exhaust pipe stopper bracket x Tailpipe stopper bracket	210	15	21
Tail pipe x Tailpipe bracket	670	48	66

TURBOCHARGER SYSTEM

Specifications

Turbocharger	Turbocharging pressure	0.50 – 0.83 kg/cm^2 (7.1 – 11.8 psi, 49 – 81 kPa)
	Impeller wheel axial play	0.13 mm (0.0051 in.) or less
	Impeller wheel radial play	0.18 mm (0.0071 in.) or less

Torque Specifications

Part tightened		kg-cm	ft-lb	N·m
Turbine outlet elbow x Turbocharger		650	47	64
Side bearing housing plate x Turbocharger		120	9	11
Turbo water pipe x Turbocharger		120	9	11
Turbocharger x Exhaust manifold		650	47	64
Oil pipe x Turbocharger		175	13	17
Oil pipe x Cylinder block	Bolt	440	32	43
	Union bolt	525	38	51
Turbocharger stay x Turbocharger		705	51	69
Turbocharger stay x Cylinder block		600	43	59
Oxygen sensor x Turbine outlet elbow		450	33	44
No.4 air tube stay x Cylinder head		195	14	19
No.4 air tube stay x No.4 air tube		195	14	19
Air by-pass valve x No.4 air tube		195	14	19

EFI SYSTEM (3S-GTE)

Specifications

Fuel pressure regulator	Fuel pressure	at no vacuum	2.3 – 2.7 kg/cm^2 (33 – 38 psi, 226 – 265 kPa)
Cold start injector	Resistance Fuel leakage		2 – 4 Ω One drop or less per minute
Injector	Resistance Injection volume Difference between each cylinder Fuel leakage		2 – 4 Ω 95 – 120 cc (5.8 – 7.3 cu in.) per 15 sec. 5 cc (0.3 cu in.) or less One drop or less per minute
Air flow meter	Resistance VS – E2		200 – 600 Ω (Measuring plate fully closed) 20 – 1,200 Ω (Measuring plate fully open)
	VC – E2		200 – 400 Ω
	THA – E2	at –20°C (–4°F)	10 – 20 kΩ
		at 0°C (32°F)	4 – 7 kΩ
		at 20°C (68°F)	2 – 3 kΩ
		at 40°C (104°F)	0.9 – 1.3 kΩ
		at 60°C (140°F)	0.4 – 0.7 kΩ
Throttle body	Throttle body fully closed angle		6°

	Clearance between stop screw and lever		Between terminals	Resistance
Throttle position sensor	0 mm	0 in.	VTA – E2	0.2 – 0.8 kΩ
	0.50 mm	0.020 in.	IDL – E2	Less than 2.3 kΩ
	0.70 mm	0.028 in.	IDL – E2	Infinity
	Throttle valve fully opened position		VTA – E2	3.3 – 10.3 kΩ
	—		VC – E2	3 – 8.3 kΩ

ISC valve	Resistance	+ B – RSC or RSO	17.7 – 23.9 Ω
Cold start injector time switch	Resistance STA – STJ	below 10°C (50°F)	30 – 50 Ω
		above 25°C (77°F)	70 – 90 Ω
	STA – Ground		30 – 90 Ω
Solenoid resistor	Resistance	+ B – No.10, No.20, No.30 or No.40	5 – 7 Ω
Fuel pump resistor	Resistance		Approx. 0.73 Ω
T-VIS VSV	Resistance		33 – 39 Ω
Turbocharging pressure VSV	Resistance		24 – 30 Ω
EGR VSV	Resistance		33 – 39 Ω

Specifications (Cont'd)

Water temp. sensor	Resistance	at –20°C (–4°F) at 0°C (32°F) at 20°C (68°F) at 40°C (104°F) at 60°C (140°F) at 80°C (176°F)	10 – 20 kΩ 4 – 7 kΩ 2 – 7 kΩ 0.9 – 1.3 kΩ 0.4 – 0.7 kΩ 0.2 – 0.4 kΩ
EGR gas temp. sensor	Resistance	at 50°C (112°F) at 100°C (212°F) at 150°C (302°F)	69.40 – 88.50 kΩ 11.89 – 14.37 kΩ 2.79 – 3.59 kΩ
Oxygen sensor	Heater coil resistance		5.1 – 6.3 Ω

ECU

HINT:
- Perform all voltage and resistance measurements with the ECU connected.
- Verity that the battery voltage in 11 V or above with the ignition switch is ON.

Voltage

Terminals	Condition		STD voltage (V)
+B, +B1 – E1	IG SW ON		10 – 14
BATT – E1	—		10 – 14
IDL – E2	IG SW ON	Throttle valve open	4 – 6
VTA – E2	IG SW ON	Throttle valve fully closed	0.1 – 1.0
VTA – E2	IG SW ON	Throttle valve fully open	3.2 – 4.2
VC – E2	IG SW ON	—	4 – 6
VS – E2	IG SW ON	Measuring plate fully closed	3.7 – 4.3
VS – E2	IG SW ON	Measuring plate fully open	0.2 – 0.5
VS – E2	Idling		2.6 – 3.6
VS – E2	3,000 rpm		1.0 – 2.0
No.1, No.2 – E01 No.3, No.4 – E02	IG SW ON		10 – 14
THA1 – E2	IG SW ON	Intake air temp. 20°C (68°F)	1 – 3
THW – E2	IG SW ON	Coolant temp. 80°C (176°F)	0.1 – 1.1
STA – E1	Cranking		6 – 14
IGT – E1	Cranking or idling		0.8 – 1.2

Specifications (Cont'd)

ECU (cont'd)	Voltage (cont'd)			
	Terminals	Condition		STD voltage (V)
	RSC – E1 RSO – E1	IG SW ON	Engine ECU connector disconnected	8 – 14
	W – E1	No trouble ("CHECK" engine warning light off) and engine running		10 – 14
	PIM – E2	IG SW ON		2.5 – 4.5
	AC1 – E1	IG SW ON	Air conditioning ON	8 – 14
	ACT – E1		Air conditioning ON	4 – 6
w/ Regular unleaded gasoline	TVIS – E1		Throttle valve fully closed	2.0 or less
			Throttle valve open	10 – 14
w/o Premium unleaded gasoline	TVIS – E1		Idling	2.0 or less
			4,200 rpm or more	10 – 14
	T – E1	IG SW ON	Check connector TE1 – E1 not connected	10 – 14
			Check connector TE1 – E1 connected	0.5 or less
	Resistance			
	Terminals	Condition		STD resistance (Ω)
	IDL – E2	Throttle valve open		Infinity
		Throttle valve fully closed		2,300 or less
	VTA – E2	Throttle valve fully open		3,500 – 10,000
		Throttle valve fully closed		200 – 800
	VC – E2	—		200 – 400
	VS – E2	Measuring plate fully closed		200 – 600
		Measuring plate fully open		20 – 1,200
	THA1 – E2	Intake air temp. 20°C (68°F)		2,000 – 3,000
	THW – E2	Coolant temp. 80°C (176°F)		200 – 400
	G1 – G⊖ G2 – G⊖	—		140 – 180
	NE – G⊖	—		180 – 220
	RSC – +B RSO – +B1	—		17.7 – 23.9
Fuel cut rpm	w/ Vehicle speed 0 km/h and coolant and coolant temp. 80°C (176°F) Fuel cut rpm Fuel return rpm			2,000 rpm 1,600 rpm

Torque Specifications

Part tightened		kg-cm	ft-lb	N·m
Fuel line	Union bolt type	300	22	29
	Flare nut type	310	22	30
Fuel pump x Fuel tank		35	30 in.-lb	3.4
Fuel sender gauge x Fuel tank		15	13 in.-lb	1.5
Fuel evaporation bent tube x Fuel tank		15	13 in.-lb	1.5
Fuel tank filler pipe x Fuel tank		35	30 in.-lb	3.4
Fuel tank band x Body		300	22	29
No.2 center crossmember x Body		300	22	29
Cold start injector x Intake manifold		60	52 in.-lb	5.9
Cold start injector pipe x Cold start injector		180	13	18
Cold start injector pipe x Delivery pipe		180	13	18
Fuel pressure regulator x Delivery pipe		300	22	29
Injector cover x Delivery pipe		80	69 in.-lb	7.8
Fuel inlet hose x Delivery pipe	Bolt	80	69 in.-lb	7.8
	Union bolt	300	22	29
Delivery pipe x Cylinder head		195	14	19
Fuel inlet hose x Fuel filter		300	22	29
Throttle body x Intake manifold		195	14	19
Intake air connector stay x Throttle body		195	14	19
Intake air connector stay x Cylinder head		80	69 in.-lb	7.8
Intake air connector x Throttle body		195	14	19

EFI SYSTEM (5S-FE)

Specifications

Fuel pressure regulator	Fuel pressure at no vacuum	2.7 – 3.1 kg/cm^2 (38 – 44 psi, 265 – 304 kPa)
Cold start injector	Resistance Fuel leakage	2 – 4 Ω One drop or less per minute
Injector	Resistance Injection volume Difference between each injector Fuel leakage	Approx. 13.8 kΩ 45 – 55 cc (2.7 – 3.4 cu in.)/15 sec. 5 cc (0.31 cu in.) or less One drop or less per minute
Throttle body	Throttle body fully closed angle	6°

	Throttle opening angle (from Vertical)	Clearance between stop screw and lever	IDL – E1	PSW – E1
Throttle position sensor (M/T)	—	0.50 mm 0.020 in.	Continuity	No continuity
	—	0.90 mm 0.035 in.	No continuity	No continuity
	Throttle valve fully opened	—	No continuity	Continuity
	71°	—	No continuity	No continuity
	81°	—	No continuity	Continuity
	7.5° or less	—	Continuity	No continuity

	Clearance between stop screw and lever	Between terminals	Resistance
Throttle position sensor (A/T)	0 mm 0 in.	VTA – E2	0.2 – 0.8 kΩ
	0.50 mm 0.020 in.	IDL – E2	2.3 kΩ or less
	0.70 mm 0.028 in.	IDL – E2	Infinity
	Throttle valve fully opened position	VTA – E2	3.3 – 10 kΩ
	—	VC – E2	3 – 7 kΩ

Specifications (Cont'd)

ISC valve	Resistance	+B – ISCC or ISCO	19.3 – 22.3 Ω
Cold start injector time switch	Resistance	STA – STJ below 30°C (68°F) STA – STJ above 40°C (104°F) STA – Ground	20 – 40 Ω 40 – 60 Ω 20 – 80 Ω
Fuel pressure VSV	Resistance		33 – 39 Ω
EGR VSV	Resistance		33 – 39 Ω
Water temp. sensor	Resistance	at –20°C (–4°F) at 0°C (32°F) at 20°C (68°F) at 40°C (104°F) at 60°C (140°F) at 80°C (176°F)	10 – 20 kΩ 4 – 7 kΩ 2 – 3 kΩ 0.9 – 1.3 kΩ 0.4 – 0.7 kΩ 0.2 – 0.4 kΩ
Intake air temp. sensor	Resistance	at –20°C (–4°F) at 0°C (32°F) at 20°C (68°F) at 40°C (104°F) at 60°C (140°F) at 80°C (176°F)	10 – 20 kΩ 4 – 7 kΩ 2 – 3 kΩ 0.9 – 1.3 kΩ 0.4 – 0.7 kΩ 0.2 – 0.4 kΩ
EGR gas temp. sensor (CALIF. only)	Resistance	at 50°C (112°F) at 100°C (212°F) at 150°C (302°F)	69.40 – 88.50 kΩ 11.89 – 14.37 kΩ 2.79 – 3.59 kΩ

ECU

HINT:
- Perform all voltage and resistance measurements with the computer connected.
- Verity that the battery voltage is 11 V or above with the ignition switch is ON.

Voltage

	Terminals	Condition		STD voltage (V)
	+B, +B1 – E1	IG SW ON		10 – 14
	BATT – E1	—		10 – 14
M/T	IDL – E1	IG SW ON	Throttle valve open	8 – 14
M/T	PSW – E1	IG SW ON	Throttle valve fully closed (Throttle opener must be cancelled first)	4.5 – 5.5
A/T	IDL – E2	IG SW ON	Throttle valve open	8 – 14
A/T	VTA – E2	IG SW ON	Throttle valve fully closed (Throttle opener must be cancelled first)	0.8 – 1.2
A/T	VTA – E2	IG SW ON	Throttle valve fully open	3.2 – 4.2
	PIM – E2	IG SW ON		3.3 – 3.9
	VC – E2	IG SW ON		4.5 – 5.5
	No.10 – E01 No.20 – E02	IG SW ON		10 – 14

Specifications (Cont'd)

ECU (cont'd)		Voltage (cont'd)			
		Terminals	Condition		STD voltage (V)
		THA – E2	IG SW ON	Intake air temp. 20°C (68°F)	1.7 – 3.1
		THW – E2		Coolant temp. 80°C (176°F)	0.3 – 0.8
		STA – E1	Cracking		6 – 14
		IGT – E1	Cranking or idling		0.8 – 1.2
		ISCC / ISCO – E1	IG SW ON		8 – 14
		W – E1	No trouble ("CHECK" engine warning light off) and engine running		8 – 14
		A/C – E1	IG SW ON	Air conditioning ON	8 – 14
	A/T	ACT – E1		Air conditioning ON	4.5 – 5.5
		T – E1		Check connector TE1 – E1 not connected	10 – 14
				Check connector T – E1 connected	1 or less
		NSW – E1		Neutral start switch P or N range	0 – 2
				Ex. neutral start switch P or N range	6 – 14
		B/K – E1	Stop light SW ON (Brake pedal depressed)		10 – 14
		Resistance			
		Terminals	Condition		Resistance (Ω)
	M/T	IDL – E1	Throttle valve fully open		Infinity
			Throttle valve fully closed (Throttle opener must be cancelled first)		0
		PSW – E1	Throttle valve fully open		0
			Throttle valve fully closed (Throttle opener must be cancelled first)		Infinity
	A/T	IDL – E2	Throttle valve fully open		Infinity
			Throttle valve fully closed (Throttle opener must be cancelled first)		2,300 or less
		VTA – E2	Throttle valve fully open		3,300 – 10,000
			Throttle valve fully closed (Throttle opener must be cancelled first)		200 – 800
		VC – E2	—		3,000 – 7,000

Specifications (Cont'd)

ECU (cont'd)	Resistance (cont'd)		
	Terminals	Condition	Resistance (Ω)
	THA – E2	Intake air temp. 20° (68°F)	2,000 – 3,000
	THW – E2	Coolant temp. 80° (176°F)	200 – 400
	G, NE – G⊖	—	140 – 180
	ISCC, ISCO – +B, +B1	—	19.3 – 22.3
Fuel cut rpm	w/ Vehicle speed 0 km/h and coolant and coolant temp. 80°C (176°F)	Fuel cut rpm	1,600 rpm
		Fuel return rpm	1,500 rpm

Torque Specifications

Part tightened		kg-cm	ft-lb	N·m
Fuel line	Union bolt type	300	22	29
	Flare nut type	310	22	30
Fuel pump x Fuel tank		35	30 in.-lb	3.4
Fuel sender gauge x Fuel tank		15	13 in.-lb	1.5
Fuel evaporation bent tube x Fuel tank		15	13 in.-lb	1.5
Fuel tank filler pipe x Fuel tank		35	30 in.-lb	3.4
Fuel tank band x Body		300	22	29
No.2 center crossmember x Body		300	22	29
Cold start injector x Intake manifold		95	82 in.-lb	9.3
Cold start injector pipe x Cold start injector		180	13	18
Cold start injector pipe x Delivery pipe		180	13	18
Fuel pressure regulator x Delivery pipe		55	48 in.-lb	5.4
Fuel return pipe x Fuel pressure regulator		180	13	18
Fuel pulsation damper x Delivery pipe		350	25	34
Delivery pipe x Cylinder head		130	9	13
Throttle body x Intake manifold		195	14	19

COOLING SYSTEM

Specifications

Engine coolant capacity			See page A-2
Radiator cap	Relief valve opening pressure	STD	0.75 – 1.05 kg/cm² (10.7 – 14.9 psi, 74 – 103 kPa)
		Limit	0.6 kg/cm² 8.5 psi 59 kPa
Thermostat	Valve opening temperature		80 – 84°C 176 – 183°F
	Valve lift at 95°C (203°F)		8 mm (0.31 in.) or more

Torque Specifications

Part tightened		kg-cm	ft-lb	N·m
Engine block x Drain plug	3S-GTE	250	18	25
	5S-FE	130	9	13
Radiator pipe x Drain plug		170	12	17
Water pump x Water pump cover		95	82 in.-lb	9.3
Water pump x Cylinder block	3S-GTE	80	69 in.-lb	7.8
	5S-FE	95	82 in.-lb	9.3
Water by-pass pipe x Water pump	3S-GTE	120	9	12
	5S-FE	95	82 in.-lb	9.3
Water inlet x Water pump	3S-GTE	80	69 in.-lb	7.8
	5S-FE	90	78 in.-lb	8.8

LUBRICATION SYSTEM

Specifications

Engine oil capacity			See page A-21	
Oil pressure		at idling	0.3 kg/cm^2 (4.3 psi, 29 kPa) or more	
		at 3000 rpm	2.5 – 5.0 kg/cm^2 (36 – 71 psi, 245 – 490 kPa)	
Oil pump	Body clearance	STD	0.100 – 0.160 mm	0.0039 – 0.0063 in.
		Limit	0.20 mm	0.0079 in.
	Tip clearance	STD	0.040 – 0.160 mm	0.0016 – 0.0063 in.
		Limit	0.20 mm	0.0079 in.

Torque specifications

Part tightened		kg-cm	ft-lb	N·m
Engine pan x Drain plug	3S-GTE	200	14	20
	5S-FE	400	29	39
Oil pump body cover x Oil pump body		90	78 in.-lb	8.8
Oil pump x Cylinder block	3S-GTE	80	69 in.-lb	7.8
	5S-FE	95	82 in.-lb	9.3
Oil strainer x Cylinder block		55	48 in.-lb	5.4
Oil strainer x Oil pump		55	48 in.-lb	5.4
Oil pan x Cylinder block		55	48 in.-lb	5.4
Oil pan x Oil pump		55	48 in.-lb	5.4
Stiffener plate x Cylinder block		380	27	37
Stiffener plate x Transaxle case		380	27	37
Oil cooler bracket x Cylinder block (3S-GTE)		80	69 in.-lb	7.8
Oil cooler x Oil cooler bracket (3S-GTE)		800	58	78
Water by-pass pipe x Oil cooler (3S-GTE)		120	9	12
Water by-pass pipe x Oil cooler bracket (3S-GTE)		180	13	18
Oil cooler x Cylinder block (5S-FE)	Relief valve	450	33	44
	Nut	80	69 in.-lb	7.8
Oil nozzle x Cylinder block		93	81 in.-lb	9.1

IGNITION SYSTEM

Ignition timing			10° BTDC @ idle (w/ Terminals TE1 and E1 connected)
Firing order			1 – 3 – 4 – 2
Spark plug			See page A-2
High-tension cord	Resistance		25 kΩ per cord
Ignition coil	Primary coil resistance		0.40 – 0.50 Ω
	Secondary coil resistance		10.0 – 14.0 kΩ
Distributor	Air gap		0.2 – 0.4 mm 0.008 – 0.016 in.
	Signal generator (pickup coil) resistance		
	3S-GTE	G1 – G ⊖	140 – 180 Ω
		G2 – G ⊖	140 – 180 Ω
		NE – G ⊖	180 – 220 Ω
	5S-FE		170 – 210 Ω

STARTING SYSTEM

Starter	Rated voltage and output power		12 V 1.0 kW	12 V 1.4 kW, 12 V 1.6 kW
	No-load characteristic	Current	90 A or less at 11.5 V	←
		rpm	3,000 rpm or more	3,000 rpm or more (1.4 kW compact type) 3,500 rpm or more (Others)
	Brush length	STD	13.5 mm 0.531 in.	15.5 mm 0.610 in.
		Limit	8.5 mm 0.335 in.	10.0 mm 0.394 in.
	Commutator			
	Outer diameter	STD	30 mm 1.18 in.	←
		Limit	29 mm 1.14 in.	←
	Undercut depth	STD	0.6 mm 0.024 in	←
		Limit	0.2 mm 0.008 in.	←
	Circle runout	Limit	0.05 mm 0.0020 in.	←
	Spring installed load		1.79 – 2.41 kg (3.9 – 5.3 lb, 18 – 24 N)	←

CHARGING SYSTEM

Drive belt tension			See page A-2
Battery specific gravity	when fully charge at 20°C (68°F)		1.25 – 1.27
Alternator	Rated output		12 V – 70 A, 12 V – 80 A, 12 V – 100 A
	Rotor coil resistance		2.8 – 3.0 Ω
	Slip ring diameter	STD	14.2 – 14.4 mm 0.559 – 0567 in.
		Limit	12.8 mm 0.504 in.
	Brush exposed length	STD	10.5 mm 0.413 in.
		Limit	1.5 mm 0.059 in.
Alternator regulator	Regulating voltage	at 25°C (77°F)	13.9 – 15.1 V
		at 115°C (239°F)	13.5 – 14.3 V

LUBRICANT

Item	Capacity			Classification
	Liters	US qts	Imp. qts	
Engine oil				API grade SG, multigrade fuel-efficient and recommended viscosity oil
3S-GTE				
Dry fill	4.3	4.5	3.8	
Drain and refill				
w/ Oil filter change	3.9	4.1	3.4	
w/o Oil filter change	3.6	3.8	3.2	
5S-FE				
Dry fill	4.4	4.7	3.9	
Drain and refill				
w/ Oil filter change	4.0	4.2	3.5	
w/o Oil filter change	3.8	4.0	3.3	

STANDARD BOLT TORQUE SPECIFICATIONS

Page

STANDARD BOLT TORQUE SPECIFICATIONS B-2

STANDARD BOLT TORQUE SPECIFICATIONS

HOW TO DETERMINE BOLT STRENGTH

	Mark	Class
Hexagon head bolt	Bolt head No. 4 — 4T; 5 — 5T; 6 — 6T; 7 — 7T; 8 — 8T; 9 — 9T; 10 — 10T; 11 — 11T	
	No mark	4T
Hexagon flange bolt w/ washer hexagon bolt	No mark	4T
Hexagon head bolt	Two protruding lines	5T
Hexagon flange bolt w/ washer hexagon bolt	Two protruding lines	6T
Hexagon head bolt	Three protruding lines	7T
Hexagon head bolt	Four protruding lines	8T

	Mark	Class
Stud bolt	No mark	4T
	Grooved	6T
Welded bolt		4T

SPECIFIED TORQUE FOR STANDARD BOLTS

Class	Diameter mm	Pitch mm	Specified torque					
			Hexagon head bolt			Hexagon flange bolt		
			kg-cm	ft-lb	N·m	kg-cm	ft-lb	N·m
4T	6	1	55	48 in.-lb	5	60	52 in.-lb	6
	8	1.25	130	9	12.5	145	10	14
	10	1.25	260	19	26	290	21	29
	12	1.25	480	35	47	540	39	53
	14	1.5	760	55	74	850	61	84
	16	1.5	1,150	83	115	—	—	—
5T	6	1	65	56 in.-lb	6.5	75	65 in.-lb	7.5
	8	1.25	160	12	15.5	175	13	17.5
	10	1.25	330	24	32	360	26	36
	12	1.25	600	43	59	670	48	65
	14	1.5	930	67	91	1,050	76	100
	16	1.5	1,400	101	140	—	—	—
6T	6	1	80	69 in.-lb	8	90	78 in.-lb	9
	8	1.25	195	14	19	210	15	21
	10	1.25	400	29	39	440	32	44
	12	1.25	730	53	71	810	59	80
	14	1.5	1,100	80	110	1,250	90	125
	16	1.5	1,750	127	170	—	—	—
7T	6	1	110	8	10.5	120	9	12
	8	1.25	260	19	25	290	21	28
	10	1.25	530	38	52	590	43	58
	12	1.25	970	70	95	1,050	76	105
	14	1.5	1,500	108	145	1,700	123	165
	16	1.5	2,300	166	230	—	—	—
8T	8	1.25	300	22	29	330	24	33
	10	1.25	620	45	61	690	50	68
	12	1.25	1,100	80	110	1,250	90	120
9T	8	1.25	340	25	34	380	27	37
	10	1.25	710	51	70	790	57	78
	12	1.25	1,300	94	125	1,450	105	140
10T	8	1.25	390	28	38	430	31	42
	10	1.25	800	58	78	890	64	88
	12	1.25	1,450	105	140	1,600	116	155
11T	8	1.25	430	31	42	480	35	47
	10	1.25	890	64	87	990	72	97
	12	1.25	1,600	116	155	1,800	130	175